For New Technology Network

NTN®

NTN corporation

# Bearing Units

CAT. NO. 2400-Ⅸ/E

# Dimension Table

| HOUSING ▶ / ▼ BEARING | | | | Page | | Page | | Page | | Page | | Page | | Page |
|---|---|---|---|---|---|---|---|---|---|---|---|---|---|---|
| Set screw type | UC2<br>F-UC2 | 400<br>416 | UCP2<br>UCPL2<br>UCPG2<br>F-UCPM2<br>F-UCPR2<br>UCIP2<br>UCIPG2<br>UCPE2 | 56<br>72<br>76<br>80<br>82<br>84<br>90<br>102 | UCHP2<br>UCUP2 | 92<br>96 | | | UCF2<br>UCFG2 | 112<br>130 | UCFC2<br>UCFCG2 | 142<br>154 | UCFL2<br>UCFLG2<br>F-UCFM2<br>F-UCFLR2<br>UCFE2 | 156<br>170<br>174<br>176<br>190 |
| | UC3 | 406 | UCP3<br>UCPG3<br>UCIP3<br>UCIPG3 | 62<br>78<br>86<br>90 | | | | | UCF3<br>UCFG3<br>UCFS3<br>UCFSG3 | 118<br>132<br>134<br>140 | | | UCFL3<br>UCFLG3 | 162<br>172 |
| | UCX | 412 | UCPX | 68 | | | | | UCFX | 124 | UCFCX | 148 | UCFLX | 168 |
| | AS2 | 418 | ASPL2<br>ASPB2 | 104<br>100 | | | ASPP2<br>ASRPP2 | 108<br>110 | | | | | ASFB2<br>ASFD2 | 186<br>188 |
| Eccentric locking collar type | UEL2 | 426 | UELP2<br>UELPL2 | 230<br>240 | UELHP2<br>UELUP2 | 244<br>246 | | | UELFU2<br>UELF2 | 262<br>266 | UELFC2 | 282 | UELFLU2<br>UELFL2 | 286<br>290 |
| | UEL3 | 430 | UELP3 | 234 | | | | | UELF3<br>UELFS3 | 270<br>276 | | | UELFL3 | 294 |
| | AEL2<br>JEL2 | 436<br>440 | AELPL2<br>JELPL2<br>AELPB2 | 248<br>252<br>256 | | | AELPP2<br>AELRPP2 | 258<br>260 | | | | | AELFD2<br>AELFB2<br>JELFD2 | 302<br>300<br>303 |
| Adapter type | UK2 | 448 | UKP2 | 332 | | | | | UKF2 | 344 | UKFC2 | 360 | UKFL2 | 368 |
| | UK3 | 452 | UKP3 | 336 | | | | | UKF3<br>UKFS3 | 348<br>356 | | | UKFL3 | 372 |
| | UKX | 456 | UKPX | 340 | | | | | UKFX | 352 | UKFCX | 364 | UKFLX | 376 |
| Other bearings | | | | | AR2 | 422 | REL2 | 444 | UCS2 | 460 | UCS3 | 464 | ASS2 | 468 |

| | Page | 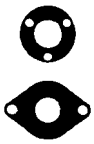 | Page | | Page | | Page | | Page | 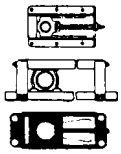 | Page |
|---|---|---|---|---|---|---|---|---|---|---|---|
| UCFA2<br>UCFH2 | 178<br>182 | | | UCHB2 | 198 | UCT2<br>UCTG2 | 202<br>218 | UCC2 | 222 | UCT2<br>UCL2<br>UCM2 | 394<br>396<br>397 |
| | | | | | | UCT3<br>UCTG3 | 208<br>220 | UCC3 | 224 | UCM3 | 398 |
| | | | | | | UCTX | 214 | UCCX | 227 | | |
| | | ASPF2<br>ASRPF2<br>ASPFL2 | 192<br>194<br>196 | | | | | | | ASPT2 | 229 |
| | | | | | | UELT2 | 314 | UELC2 | 324 | | |
| | | | | | | UELT3 | 318 | UELC3 | 326 | | |
| | | AELPF2<br>AELRPF2<br>AELPFL2<br>JELPF2<br>JELPFL2 | 304<br>308<br>310<br>306<br>312 | | | | | | | AELPT2<br>JELPT2 | 330<br>331 |
| | | | | | | UKT2 | 378 | UKC2 | 390 | | |
| | | | | | | UKT3 | 382 | UKC3 | 391 | | |
| | | | | | | UKTX | 386 | UKCX | 393 | | |
| UELS2 | 472 | UELS3 | 476 | AELS2 | 480 | JELS2 | 484 | CS2<br>CS3 | 488<br>489 | Farm implement bearings | 490 |

# Warranty

**NTN** warrants, to the original purchaser only, that the delivered product which is the subject of this sale (a) will conform to drawings and specifications mutually established in writing as applicable to the contract, and (b) be free from defects in material or fabrication. The duration of this warranty is one year from date of delivery. If the buyer discovers within this period a failure of the product to conform to drawings or specifications, or a defect in material or fabrication, it must promptly notify **NTN** in writing. In no event shall such notification be received by **NTN** later than 13 months from the date of delivery. Within a reasonable time after such notification, **NTN** will, at its option, (a) correct any failure of the product to conform to drawings, specifications or any defect in material or workmanship, with either replacement or repair of the product, or (b) refund, in part or in whole, the purchase price. Such replacement and repair, excluding charges for labor, is at **NTN**'s expense. All warranty service will be performed at service centers designated by **NTN**. These remedies are the purchaser's exclusive remedies for breach of warranty.

**NTN** does not warrant (a) any product, components or parts not manufactured by **NTN**, (b) defects caused by failure to provide a suitable installation environment for the product, (c) damage caused by use of the product for purposes other than those for which it was designed, (d) damage caused by disasters such as fire, flood, wind, and lightning, (e) damage caused by unauthorized attachments or modification, (f) damage during shipment, or (g) any other abuse or misuse by the purchaser.

**THE FOREGOING WARRANTIES ARE IN LIEU OF ALL OTHER WARRANTIES, EXPRESS OR IMPLIED, INCLUDING BUT NOT LIMITED TO THE IMPLIED WARRANTIES OF MERCHANTABILITY AND FITNESS FOR A PARTICULAR PURPOSE.**

In no case shall **NTN** be liable for any special, incidental, or consequential damages based upon breach of warranty, breach of contract, negligence, strict tort, or any other legal theory,and in no case shall total liability of **NTN** exceed the purchase price of the part upon which such liability is based. Such damages include, but are not limited to, loss of profits, loss of savings or revenue, loss of use of the product or any associated equipment, cost of capital, cost of any substitute equipment, facilities or services, downtime, the claims of third parties including customers, and injury to property. Some states do not allow limits on warranties, or on remedies for breach in certain transactions. In such states, the limits in this paragraph and in paragraph (2) shall apply to the extent allowable under case law and statutes in such states.

Any action for breach of warranty or any other legal theory must be commenced within 15 months following delivery of the goods.

Unless modified in a writing signed by both parties, this agreement is understood to be the complete and exclusive agreement between the parties, superceding all prior agreements, oral or written, and all other communications between the parties relating to the subject matter of this agreement. No employee of **NTN** or any other party is authorized to make any warranty in addition to those made in this agreement.

This agreement allocates the risks of product failure between **NTN** and the purchaser. This allocation is recognized by both parties and is reflected in the price of the goods. The purchaser acknowledges that it has read this agreement, understands it, and is bound by its terms.

© **NTN** Corporation. 2007
Although care has been taken to assure the accuracy of the data compiled in this catalog, **NTN** does not assume any liability to any company or person for errors or omissions.

NTN

# Bearing Units

## Bearing units stainless series

**(Stainless bearings + Stainless steel housing)**

This new series from **NTN** provides corrosion resistance and longer lubrication life in a clean unit with low torque characteristics.

**Guards against corrosion**

**NTN** bearing units in the stainless series feature ball bearings inserted into housings made of stainless that provide superior resistance to corrosion as compared to standard series cast iron units. This series is especially useful in a wide variety of applications because of the rust free properties of the housing.

**Longer lubrication life**

The solid grease lubricating the bearing has been heat-hardened and is a mixture of lubricant and ultra high moleculer weight polyethylene. The solid grease reduces leakage, prolonging lubricant life especially when used under conditions of vibration or centrifugal force. Also, this grease will not homogenize when water penetrates into the bearing raceway.

**Maintains a clean operating environment**

The solid grease lubricant in the ball bearing, solely developed by **NTN**, reduces leakage from the bearing, significantly reducing environmental pollution.

**Low torque characteristics**

The standard solid grease type for these ball bearing units is spot-pack which places the lubricant on the bearing cage. Torque consumption capabilities of spot-pack bearings is low due to reduced whip resistance in comparison to standard grease lubricated ball bearings.

**Interchangeability**

The basic dimensions are the same as current **NTN** units and are also compatible with units from other manufacturers ISO standard.

## Bearing units plastic housing series

**(Stainless bearings + Glass fiber reinforced plastic housing)**

The **NTN** plastic series ensures a clean operating environment.

**Guards against corrosion**

**NTN** bearing units in the plastic series feature ball bearings inserted into housings made of plastics that provide superior resistance to corrosion as compared to standard series cast iron units. This series is especially useful in a wide variety of applications because of the nonmagnetic and rust free properties of the housing.

**Maintains a clean operating environment**

The solid grease lubricant in the ball bearing, solely developed by **NTN**, reduces leakage from the bearing, significantly reducing environmental pollution. Also, the housing will not stain, nor is there paint to peel and contaminate the environment.

**Low torque characteristics**

The standard solid grease type for these ball bearing units is spot-pack which places the lubricant on the bearing cage. Torque consumption capabilities of spot-pack bearings is low due to reduced whip resistance in comparison to standard grease lubricated ball bearings.

**Light weight**

Weight is reduced more than 30% to 60% over standard series units.

**Water resistant**

The glass filled polyester housing not only reduces corrosion but offers better water resistance.

## Bearing units with ductile cast iron housing

**(Spheroidal graphite cast iron housing)**

The **NTN** ductile series helps with design optimization!

**Housing weight is reduced by 40%, with a compact design**

When compared with the standard **NTN** housing the ductile series housing enjoys a 40% weight reduction . Additionally the housing is useful for a size reduction in machine equipment. This is achieved by minimizing as much as possible non-critical dimensions of the housing allowing the housing to be placed in tight locations.

**High fracture strength of housing**

Spheroidal graphite cast iron is used for the bearing housing. It is designed to have high strength with fine material structure and uniformed thickness. The average fracture strength for the series is increased by approximately. 30% when compared with **NTN**'s standard product (FC200, Gray cast iron).

**Two lubrication types : Relubricatable type maintenance free type**

The relubricatable type is suitable for high temperature and high speed application, and the maintenance free type is optimized for a long period under normal using conditions without re-greasing.

**Interchangeability**

This series is interchangeable with **NTN** standard product and other domestic suppliers' product. This is achieved by keeping the dimensions related to mounting the same as for standard product made according to JIS B 1559 (Housings for rolling bearing units).

## Bearing units steel series

**(Rolled steel housing for general structures)**

**NTN** rolled steel housings ensure a safer design

**Superior Housing Strength**

Made of precision gas cut rolled steel, **NTN** steel housings offer superior strength characteristics when compared to cast iron and cast steel housings.

**Consistent Microstructure**

The rolled steel microstructure is more consistent than cast iron or cast steel, reducing the risk of housing fracture under severe conditions.

**Interchangeability**

Rolled steel housing dimensions are consistent with cast units, allowing them to be interchanged with **NTN** standard housings and other manufacturers ISO standard.

**Applications**

**NTN** rolled steel housings provide superior strength to cast steel and cast iron. Their ability to resist impact loads makes them suitable for applications involving heavy loads and vibration. Possible applications for **NTN** rolled steel housings include but are not limited to conveyors, trucks and overhead cranes at steel mills, mining machinery and pollution control equipment.

# NTN Triple-Sealed Bearings for Bearing Units

These reliable triple-sealed bearings are dustproof and waterproof.
They ensure a longer bearing life even when exposed to heavy airborne dust and splashes of foul water.

## 1. Construction

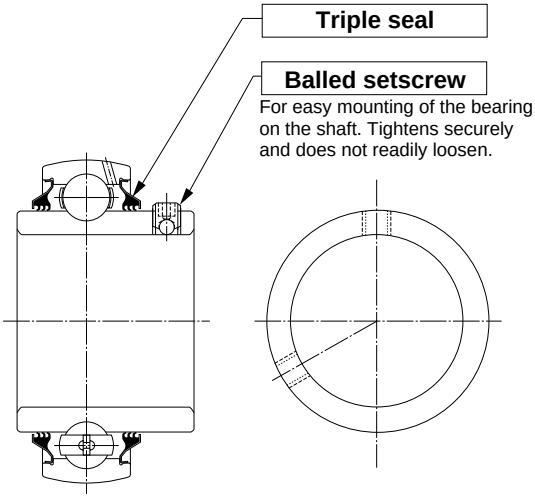


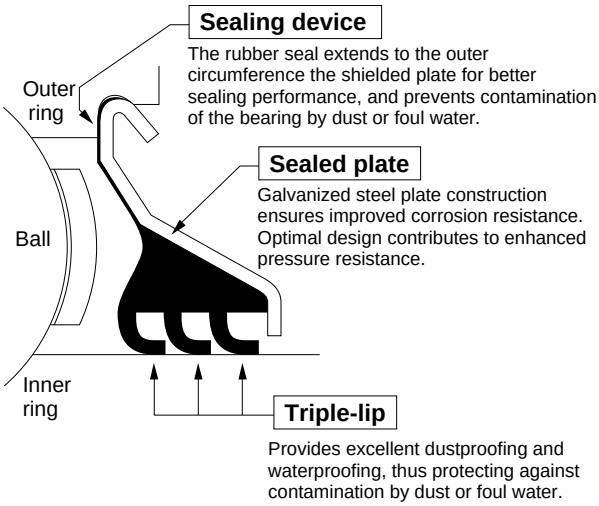


## 2. Features

**Better dustproofing and waterproofing ensure a longer bearing life.**

Triple-sealed bearings feature a secure bearing seal with three lips. This special seal offers reliable dustproofing and waterproofing superior to those of standard bearings used in bearing units. In addition, it ensures a longer service life, even when exposed to heavy airborne dust and splashes of foul water. (Patent pending)

**Reduces maintenance cost.**

A bearing life longer than that of a standard bearing unit configurations means extended maintenance intervals, greatly reduced maintenance costs (of inspection, relubrication, replacement, etc.), and increased availability of machinery.

**Decreases price of the bearing unit and contributes to more compact machinery.**

The triple-sealed bearing unit replaces conventional covered bearing units in certain operating conditions, greatly decreasing the cost of bearing units. In addition, if the cover is not required, the machinery can be made more compact.

**Secure balled setscrew**

The triple-sealed bearing is mounted on the shaft with **NTN**'s unique balled setscrew, which features an embedded ball in its tip. Compared with knurled cup point or cup-point setscrews, the balled setscrew provides much greater resistance to loosening, as it does not readily loosen due to vibration or impact.

**Interchangeability**

The triple-sealed bearing unit conforms to the JIS (Japanese Industrial Standard) for UC-type bearings. It is not only ready to use as a relubricable bearing, but it also replaces the conventional bearing units of NTN and other manufacturers. It therefore serves as a ready replacement for existing bearing units.

## 3. Allowable Operating Temperature Range and Speed

The triple-sealed bearing can be used in a temperature range of -15˚C to 100˚C.

- Allowable speed

Low-torque triple-sealed bearing unit$\cdots d_n$ value : 36000
High-torque triple-sealed bearing unit$\cdots d_n$ value : 21000

# TECHNICAL DATA INDEX


Page

**1. Construction** ---- 6

**2. Design Features and Advantages** ---- 7

2.1 Maintenance free type ---- 7
2.2 Relubricatable type ---- 7
2.3 Special sealing feature ---- 7
2.4 Secure fitting ---- 8
2.5 Self-aligning ---- 8
2.6 Higher rated load capacity ---- 8
2.7 Light weight yet strong housing ---- 8
2.8 Easy mounting ---- 8
2.9 Accurate fitting of the housing ---- 8
2.10 Bearing replaceability ---- 8

**3. Material** ---- 9

3.1 Materials of ball bearings for units ---- 9
3.2 Materials of housings for units ---- 9

**4. Bearing unit number code** ---- 10

4.1 Bearing unit number code ---- 10
4.2 Ball bearing number code for unit. ---- 10
4.3 Housing number code for unit. ---- 10
4.4 Supplementary code ---- 10

**5. Tolerance** ---- 17

5.1 Tolerances of ball bearings for the unit ---- 17
5.2 Tolerances of housings ---- 20

**6. Basic Load Rating and Life** ---- 24

6.1 Bearing life ---- 24
6.2 Basic rating life and basic dynamic load rating ---- 24
6.3 Machine applications and requisite life ---- 26
6.4 Adjusted life rating factor ---- 26
6.5 Basic static load rating ---- 27
6.6 Allowable static equivalent load ---- 27

**7. Loads** ---- 28

7.1 Load acting on the bearing ---- 28
7.2 Dynamic equivalent radial load ---- 30
7.3 Static equivalent radial load ---- 30

**8. Bearing Internal Clearance** ---- 31

8.1 Bearing internal clearance ---- 31
8.2 Internal clearance selection ---- 31
8.3 Bearing internal clearance selection standards ---- 32

**9. Lubrication** ---- 34

9.1 Maximum permissible speed of rotation ---- 34
9.2 Replenishment of grease ---- 35
9.3 Grease fitting ---- 36
9.4 Standard location of the grease fitting ---- 37

**10. Shaft Designs** ---- 38

10.1 Set screw system bearing units ---- 38
10.2 Eccentric collar system ---- 42
10.3 Adapter system bearing units ---- 42

**11. Handling of the Bearing Unit** ---- 43

11.1 Mounting of the housing ---- 43
11.2 Mounting the bearing unit on the shaft ---- 46
11.3 Running tests ---- 51
11.4 Inspection during operation ---- 51
11.5 Dismounting the bearing unit ---- 51
11.6 Replacement of the bearing ---- 51

## 1. Construction

The **NTN** bearing unit is a combination of a radial ball bearing, seal, and a housing of high-grade cast iron or pressed steel, which comes in various shapes.

The outer surface of the bearing and the internal surface of the housing are spherical, so that the unit is self-aligning.

The inside construction of the ball bearing for the unit is such that steel balls and retainers of the same type as in series 62 and 63 of the **NTN** deep groove ball bearing are used. A duplex seal consisting of a combination of an oil-proof synthetic rubber seal and a slinger, unique to **NTN**, is provided on both sides.

Depending on the type, the following methods of fitting to the shaft are employed:

(1) The inner ring is fastened onto the shaft in two places by set screws.

(2) The inner ring has a tapered bore and is fitted to the shaft by means of an adapter.

(3) In the eccentric locking collar system the inner ring is fastened to the shaft by means of eccentric grooves provided at the side of the inner ring and on the collar.

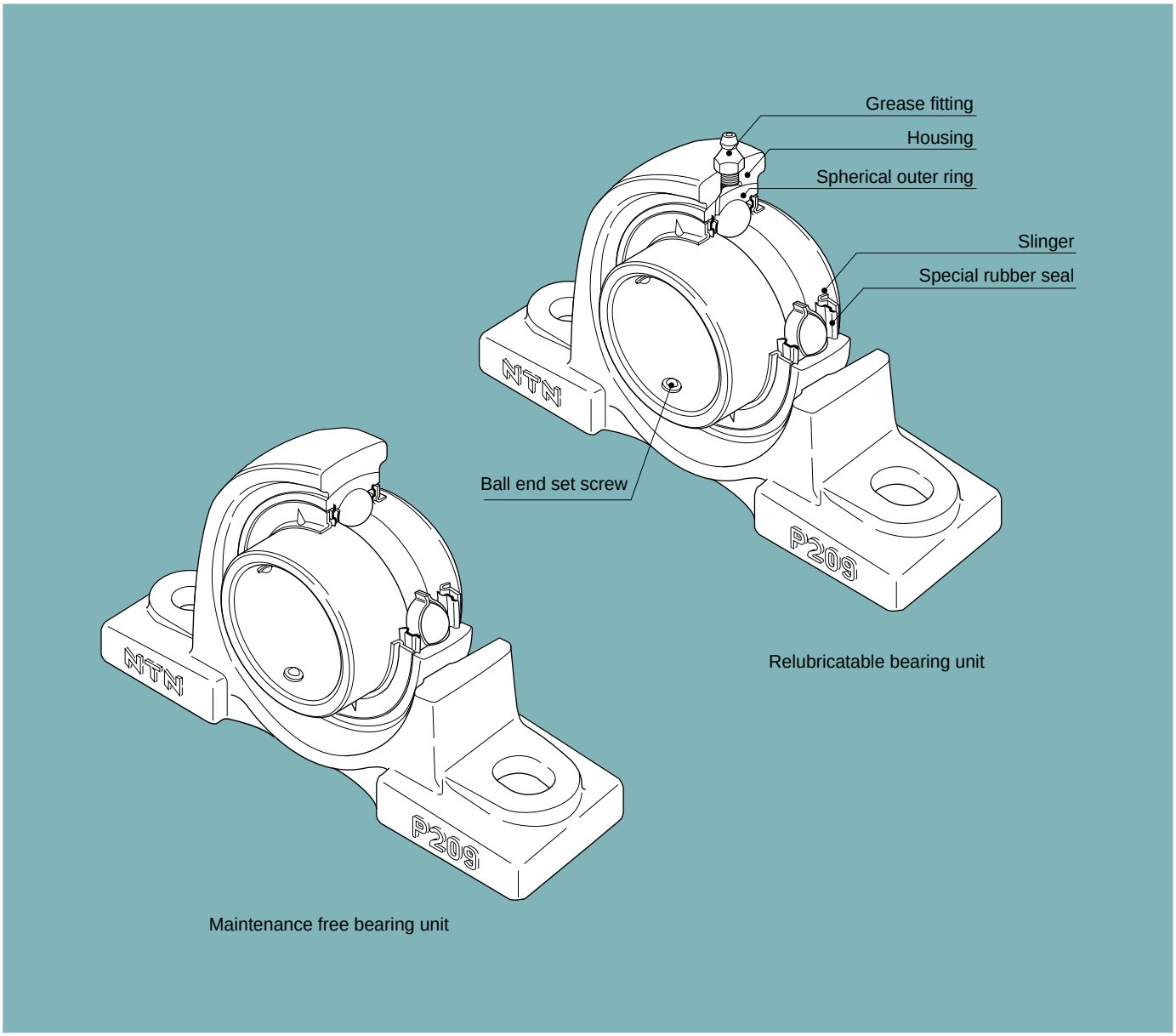

# 2. Design Features and Advantages

## 2.1 Maintenance free type

The **NTN** Maintenance free bearing unit contains a high-grade lithium-based grease, good for use over a long period, which is ideally suited to sealed-type bearings. Also provided is an excellent sealing device, unique to **NTN**, which prevents any leakage of grease or penetration of dust and water from outside.

It is designed so that the rotation of the shaft causes the sealed-in grease to circulate through the inside space, effectively providing maximum lubrication. The lubrication effect is maintained over a long period with no need for replenishment of grease.

To summarize the advantages of the **NTN** maintenance free bearing unit:

(1) As an adequate amount of good quality grease is sealed in at the time of manufacture, there is no need for replenishment. This means savings in terms of time and maintenance costs.

(2) Since there is no need for any regreasing facilities, such as piping, a more compact design is possible.

(3) The sealed-in design eliminates the possibility of grease leakage, which could lead to stained products.

## 2.2 Relubricatable type

The **NTN** relubricatable type bearing unit has an advantage over other simillar units being so designed as to permit regreasing even in the case of misalignment of 2˚ to the right or left. The hole through which the grease fitting is mounted usually causes structural weakening of the housing.

However, as a result of extensive testing, in the **NTN** bearing unit the hole is positioned so as to minimize this adverse effect. In addition, the regreasing groove has been designed to minimize weakening of the housing.

While the **NTN** maintenance free type bearing unit is satisfactory for use under normal operating conditions in-doors, in the following circumstances it is necessary to use the relubricatable type bearing unit:

(1) Cases where the temperature of the bearing rises above 100˚C, 212˚F:
*- Normal temperature of up to 200˚C, 392˚F heatresistant bearing units.

(2) Cases where there is excessive dust, but space does not permit using a bearing unit with a cover.

(3) Cases where the bearing unit is constantly exposed to splashes of water or any other liquid, but space does not permit using a bearing unit with a cover.

(4) Cases in which the humidity is very high, and the machine in which the bearing unit is used is run only intermittently.

(5) Cases involving a heavy load of which the $C_r/P_r$ value is about 10 or below, and the speed is 10 rpm or below, or the movement is oscillatory.

(6) Cases where the number of revolutions is relatively high and the noise problem has to be considered; for example, when the bearing is used with the fan of an air conditioner.

## 2.3 Special sealing feature

### 2.3.1 Standard bearing units

The sealing device of the ball bearing for the **NTN** bearing unit is a combination of a heat-resistant and oil-proof synthetic rubber seal and a slinger of an exclusive **NTN** design.

The seal, which is fixed in the outer ring, is steelreinforced, and its lip, in contact with the inner ring, is designed to minimize frictional torque.

The slinger is fixed to the inner ring of the bearing with which it rotates. There is a small clearance between its periphery and the outer ring.

These two types of seals on both sides of the bearing prevent grease leakage, and foreign matter is prevented from entering the bearing from outside.

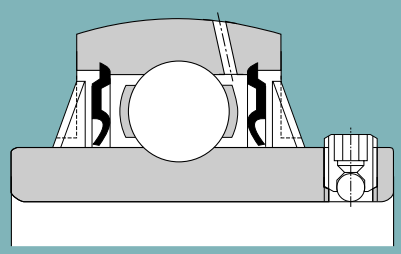

Fig. 2.1

### 2.3.2 Bearing units with covers

The **NTN** bearing unit with a cover consists of a standard bearing unit and an outside covering for extra protection against dust. Special consideration has been given to its design with respect to dust-proofing.

Sealing devices are provided in both the bearing and the housing, so that units of this type operate satisfactorily even in such adverse environments as flour mills, steel mills, foundries, galvanizing plants and chemical plants, where excessive dust is produced and/or liquids are used. They are also eminently suitable for outdoor environments where dust and rain are inevitable, and in heavy industrial machinery such as construction and transportation equipment.

The rubber seal of the cover contacts with the shaft by its two lips, as shown in Fig. 2.2 and 2.3. By filling the groove between the two lips with grease, an excellent sealing effect is obtained and, at the same time, the contacting portions of the lips are lubricated. Furthermore, the groove is so

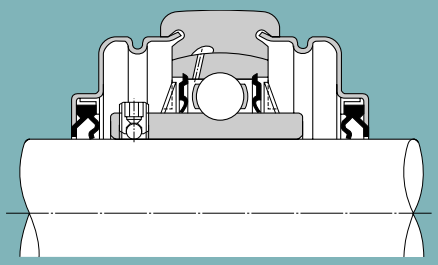

Fig. 2.2 Pressed steel cover

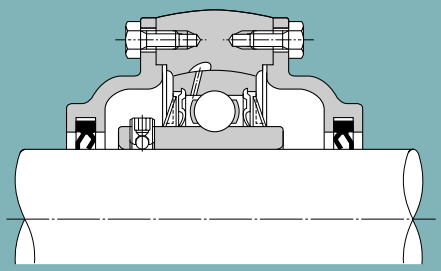

Fig. 2.3 Cast iron cover

designed that when the shaft is inclined the rubber seal can move in the radial direction.

When bearing units are exposed to splashes of water rather than to dust, a drain hole (5 to 8 mm, 0.2 to 0.3 inches in diameter) is provided at the bottom of the cover, and grease should be applied to the side of the bearing itself instead of into the cover.

## 2.4 Secure fitting

Fastening the bearing to the shaft is effected by tightening the ball-end set screw, situated on the inner ring. This is a unique **NTN** feature which prevents loosening, even if the bearing is subjected to intense vibrations and shocks.

## 2.5 Self-aligning

With the **NTN** bearing unit, the outer surface of the ball bearing and the inner surface of the housing are spherical, thus this bearing unit has self-aligning characteristic. Any misalignment of axis that may arise from poor workmanship on the shaft or errors in fitting will be properly adjusted.

## 2.6 Higher rated load capacity

The bearing used in the unit is of the same internal construction as those in **NTN** bearing series 62 and 63, and is capable of accommodating axial load as well as radial load, or composite load. The rated load capacity of this bearing is considerably higher than that of the corresponding self-aligning ball bearings used for standard plummer blocks.

## 2.7 Light weight yet strong housing

Housings for **NTN** bearing units come in various shapes. They consist of either high-grade cast iron, one-piece casting, or of precision finished pressed steel, the latter being lighter in weight. In either case, they are practically designed to combine lightness with maximum strength.

## 2.8 Easy mounting

The **NTN** bearing unit is an integrated unit consisting of a bearing and a housing.

As the bearing is prelubricated at manufacture with the correct amount of high-grade lithium base, it can be mounted on the shaft just as it is. It is sufficient to carry out a short test run after mounting.

## 2.9 Accurate fitting of the housing

In order to simplify the fitting of the pillow block and flange type bearing units, the housings are provided with a seat for a dowel pin, which may be utilized as needed.

## 2.10 Bearing replaceability

The bearing used in the **NTN** bearing unit is replaceable. In the event of bearing failure, a new bearing can be fitted to the existing housing.

# 3. Material

## 3.1 Raceway and rolling element materials

Materials with high hardness and appropriate toughness are used for the inner rings, outer rings and balls of the insert bearings since large compression forces and repetitive stresses are applied to a small contact. In general Cold-rolled steel is used for the cages. For special applications, stainless steel is also available for use in the insert bearings.

## 3.2 Housing materials

The most common materials used in **NTN** bearing unit housings are cast iron or steel plate, with cast iron being the standard.

For special applications, materials such as spheroidal graphite iron, structural steel, stainless steel cast iron or plastic resin are also available for use in the housings. The chemical resistance properties of glass-fiber reinforced resin are shown in Table 3.1.

### 3.2.1 Cast iron housing

**NTN** uses gray cast iron as the standard material for cast iron housings.

Among metallic materials cast iron has a high damping capacity, which is an ideal characteristic for mechanical components. This means cast iron, exhibits superior performance when absorbing vibration, compared with other materials. Additionally cast iron is suitable for high temperatures of up to 300C˚.

### 3.2.2 Steel plate housing

Cold-rolled steel sheet or hot-rolled mild steel sheet is used for steel plate housings.

**Table 3.1 Water and chemical resistance of glass fiber reinforcing resin housing (VALOX 420®)**

| | Chemicals | Temperature ˚C | Deterioration ratio[1] % Number of days soaked 30 days | 90 days | | Chemicals | Temperature ˚C | Deterioration ratio[1] % Number of days soaked 30 days | 90 days |
|---|---|---|---|---|---|---|---|---|---|
| Acid | Hydrochloric acid, 10% | 23 | 89 | 85 | Organic solven | Ethyl alcohol | 23 | 99 | 96 |
| | Sulfuric acid, 36% | 23 | 97 | 97 | | Methyl alcohol | 23 | 91 | 82 |
| | | 60 | 84 | 60 | | Isopropyl alcohol | 23 | 100 | 100 |
| | Acetic acid 10% | 23 | 88 | 88 | | Acetone | 23 | 86 | 74 |
| Alkaline | Potassium hydroacid, 5% | 23 | 88 | 10 | | Methyl Ethyl Keton | 23 | 90 | 80 |
| | Sodium hydroacid, 10% | 23 | ※ | ※ | | Ethyl acetate | 23 | 96 | 86 |
| | Ammonia hydroacid, 10% | 23 | 96 | 87 | | Methylene chloride | 23 | 54 | 54 |
| Oil | Motor oil | 23 | 100 | 100 | | ethylene grycole | 23 | 100 | 100 |
| | Brake oil | 23 | 100 | 100 | Sodium | Zinc chrolide 10% | 23 | 97 | 94 |
| | Gasoline (Regular) | 23 | 100 | 100 | | Calcium chrolide 10% | 23 | 98 | 98 |
| | | 60 | 93 | 90 | | Sodium chrolide 5% | 23 | 97 | 97 |

**Remarks 1)** Deterioration (%) is the strength after test divided by the strength before test.
The ※ symbol indicates that results could not be measured as the test piece dissolved.
**Remarks 2)** The values listed in the table are not guaranteed as they are the result of soaking without operating stresses on the sample. Because this strength data is general, it does not apply under all operating conditions. Actual housing strength will vary depending on the type and concentration of liquid, temperature, load, etc.
**Remarks 3)** Technical data provided by General Electric Company.

Among engineering plastics, VALOX has better water absorption characteristics (0.06% at 23˚C over 24 hours) and better dimensional stability. VALOX is made of crystallized polymer and while not affected by organic solvents, is affected by alkaline, making it important to consider the operating environment. The table demonstrates VALOX's chemical resistance when soaked in solvent at 30 or 90 days.

**Table 3.2 Anti-Corrosion capability**

◎ ○ △ ▲ ×
**NTN** recommends ratings of ◎ to ○ for optimum corrosion resistance. excellent ←→ poor

| Materials \ Condition | Atmosphere Dry | Atmosphere Wet | Water Natural water | Water Sodium water | Acid Nitric acid | Acid Sulfuric acid | Acid Hydrochloric acid |
|---|---|---|---|---|---|---|---|
| Martensite stainless steel SUS440C, SUS410 | ○ | △ | △ | ▲ | ▲ | × | × |
| Austenite stainless steel SUS304, SCS13 | ◎ | ◎ | ◎ | ○ | ◎ | ○ | △ |
| Polyester plastics VALOX 420 | ◎ | ◎ | ◎ | ◎ | ▲ | ○ | ○ |
| Polypropylene, polyethylene | ◎ | ◎ | ◎ | ◎ | ○ | ○ | ○ |
| High carbon steel SUJ2 | △ | ▲ | ▲ | × | × | × | × |
| Carbon steel, Cast iron | ▲ | × | × | × | × | × | × |

**Remarks:** This data is obtained by observation of the surface conditions of materials.
Note that these anti-corrosion capabilities are altered by anti-corrosion surface treatment.
Not recommended for use in liquid.

# 4. Bearing unit part numbering

## 4.1 Bearing unit part numbering

**NTN** Bearing unit part numbers are in accordance with the Japanese Industrial Standard JIS. The code for the bearing type, housing type, diameter series and bore diameter are expressed from left to right within the part number.

**Example 1**

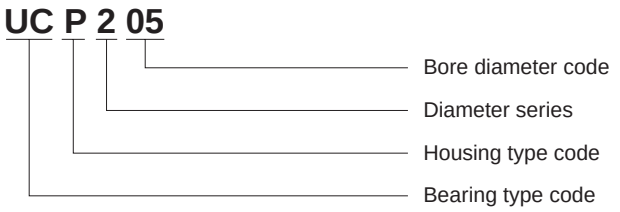


**Example 2**

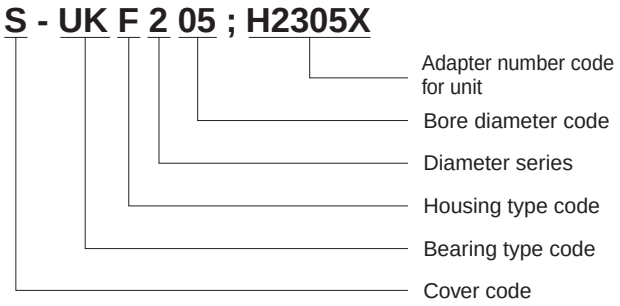


## 4.2 Ball bearing insert part numbering

The part number for the insert bearing matches the part number for the bearing unit.

**Example**

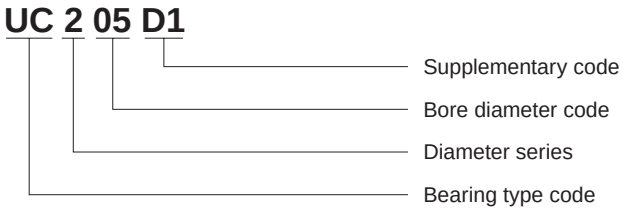


Each bearing unit can take any number of different ball bearing inserts. The available insert types are shown in Fig. 4.3(1)-4.3(9).

## 4.3 Housing part numbering

Housing part numbers are expressed by the housing type code, the bearing outer diameter series code and the bore diameter codes of the insert bearing that would be used for the unit.

The available housings are shown in Table 4.3(1)-4.3(9).

**Example**

## 4.4 Supplemental codes

Typical supplementary codes added after the Bearing unit part number are shown below.

**Table 4.1 Examples of supplementary codes**

| Item | Supplementary code | Content |
|---|---|---|
| For heat resistance and cold resistance | HT2 | Heat resistance |
| | CT1 | Cold resistance |
| Housing material | N1 | Spheroidal graphite cast iron (FCD450) |
| Lubrication method | No code | Maintenance free type |
| | D1 | Relubricatable type |
| Bearing seal | No code | Standard nitrile rubber seal |
| | U | Non-contact shield plate |
| | LLJ | Triple lip seal |
| Set screw | No code | Set screw with ball (Except for stainless bearing) |
| | W3 | Cup point |
| | W4 | Double point |
| | W5 | Round head dog point set screw (With one piece) |
| | W6 | Round head key bolt (With one piece) |

**Example 1**

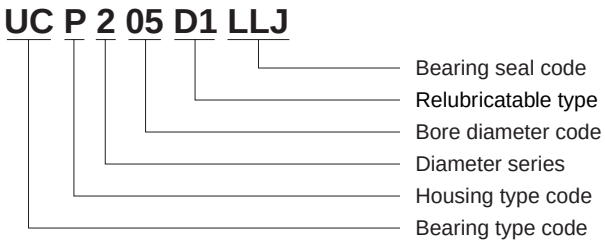


**Example 2**

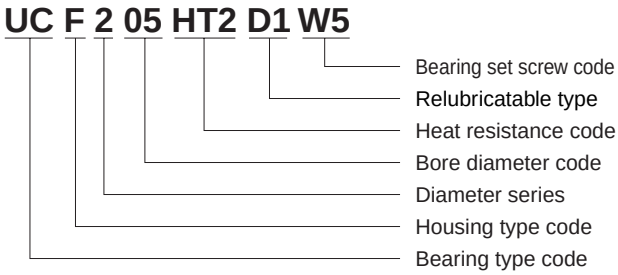


Bearing specifications for heat resistance and cold resistance are shown in Table 4.2.

**Table 4.2 Bearing specifications for heat resistance and cold resistance**

| Item | Code | Operating range (˚C) | Grease | Bearing seal | Bearing clearance |
|---|---|---|---|---|---|
| Heat resistance | HT2 | Room temp. ~180˚C | Li soap+ Silicon oil | Non-contact shield plate | C4 |
| Cold resistance | CT1 | −60˚C ~Room temp. | Li soap+ Silicon oil | Non-contact shield plate | CN |

**Table 4.3 (1) Cast iron pillow block type units**

| Housing Type<br>Material : Cast Iron | | Cover | Bearing Type | | | | | |
|---|---|---|---|---|---|---|---|---|
| | | | <br>UC | 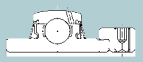 <br>UEL<br> 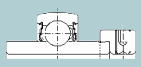 <br>REL | 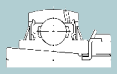 <br>UK | <br>AS<br> <br>AR | 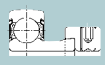 <br>AEL<br> <br>JEL | <br>CS |
| **Pillow Block** | | – | UCP | UELP<br>RELP | UKP | ASP<br>ARP | AELP<br>JELP | – |
| | | Steel | S(M)-UCP | – | S(M)-UKP | S(M)-ASP<br>S(M)-ARP | – | – |
| | | Cast Iron | C(M)-UCP | – | C(M)-UKP | C(M)-ASP<br>C(M)-ARP | – | – |
| **Thick Pillow Block** | | – | UCIP | UELIP<br>RELIP | UKIP | – | – | – |
| | | Steel | S(M)-UCIP | – | S(M)-UKIP | – | – | – |
| | | Cast Iron | C(M)-UCIP | – | C(M)-UKIP | – | – | – |
| **High-Center Pillow Block** | | – | UCHP | UELHP<br>RELHP | UKHP | ASHP<br>ARHP | AELHP<br>JELHP | – |
| | | Steel | S(M)-UCHP | – | S(M)-UKHP | S(M)-ASHP<br>S(M)-ARHP | – | – |
| **Narrow Pillow Block** | | – | UCUP | UELUP<br>RELUP | UKUP | ASUP<br>ARUP | AELUP<br>JELUP | – |
| | | Steel | S(M)-UCUP | – | S(M)-UKUP | S(M)-ASUP<br>S(M)-ARUP | – | – |
| **Light Pillow Block** | | – | – | – | – | ASPB<br>ARPB | AELPB<br>JELPB | CSPB |
| **Pillow Block Low-Center** | | – | UCPL | UELPL<br>RELPL | UKPL | ASPL<br>ARPL | AELPL<br>JELPL | – |

Remarks 1. The codes "S-" and "C-" at the head of the type codes indicate steel plate covered bearing units and cast iron covered bearing units, respectively.
2. Single-sided closed covered bearing units made of steel and cast iron are also available.
These bearing units are identified with the codes "SM-"(steel plate) and "CM-"(cast iron) at the head of the type codes, respectively.
3. "UC" type stainless steel bearings are also available. For further details, consult **NTN** (Stainless Series Bearing unit)

**Table 4.3 (2) Cast iron flange type units**

| Housing Type<br>Material : Cast Iron | | Cover | Bearing Type | | | | | |
|---|---|---|---|---|---|---|---|---|
| | | | <br>UC | 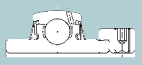 <br>UEL<br> 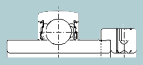 <br>REL | 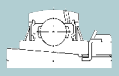 <br>UK | <br>AS<br> <br>AR | 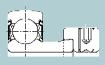 <br>AEL<br> <br>JEL | <br>CS |
| **Square Flange** | | – | UCF | UELF<br>RELF | UKF | ASF<br>ARF | AELF<br>JELF | – |
| | | Steel | S(M)-UCF | – | S(M)-UKF | S(M)-ASF<br>S(M)-ARF | – | – |
| | | Cast Iron | C(M)-UCF | – | C(M)-UKF | C(M)-ASF<br>C(M)-ARF | – | – |
| **Square Flange W/Spigot Joint** | | – | UCFS | UELFS | UKFS | – | – | – |
| | | Cast Iron | C(M)-UCFS | – | C(M)-UKFS | – | – | – |
| **Round Flange W/Spigot Joint** | | – | UCFC | UELFC<br>RELFC | UKFC | ASFC<br>ARFC | AELFC<br>JELFC | – |
| | | Steel | S(M)-UCFC | – | S(M)-UKFC | S(M)-ASFC<br>S(M)-ARFC | – | – |
| | | Cast Iron | C(M)-UCFC | – | C(M)-UKFC | C(M)-ASFC<br>C(M)-ARFC | – | – |
| **Rhombus Flange** | | – | UCFL | UELFL<br>RELFL | UKFL | ASFL<br>ARFL | AELFL<br>JELFL | – |
| | | Steel | S(M)-UCFL | – | S(M)-UKFL | S(M)-ASFL<br>S(M)-ARFL | – | – |
| | | Cast Iron | C(M)-UCFL | – | C(M)-UKFL | C(M)-ASFL<br>C(M)-ARFL | – | – |
| **Square Flange** | | – | UCFU | UELFU<br>RELFU | UKFU | ASFU<br>ARFU | AELFU<br>JELFU | – |
| **Rhombus Flange** | | – | UCFLU | UELFLU<br>RELFLU | UKFLU | ASFLU<br>ARFLU | AELFLU<br>JELFLU | – |
| **Modified Rhombus Flange** | | – | UCFA | UELFA<br>RELFA | UKFA | ASFA<br>ARFA | AELFA<br>JELFA | – |
| | | Steel | S(M)-UCFA | – | S(M)-UKFA | S(M)-ASFA<br>S(M)-ARFA | – | – |
| **Light Rhombus Flange** | | – | – | – | – | ASFB<br>ARFB | AELFB<br>JELFB | CSFB |
| **Light Rhombus Flange** | | – | – | – | – | ASFD<br>ARFD | AELFD<br>JELFD | – |
| **Modified Flange** | | – | UCFH | UELFH<br>RELFH | UKFH | ASFH<br>ARFH | AELFH<br>JELFH | – |

Remarks 1. The codes "S-" and "C-" at the head of the type codes indicate steel plate covered bearing units and cast iron covered bearing units, respectively.
2. Single-sided closed covered bearing units made of steel and cast iron are also available.
These bearing units are identified with the codes "SM-"(steel plate) and "CM-"(cast iron) at the head of the type codes, respectively.
3. "UC" type stainless steel bearings are also available. For further details, consult **NTN** (Stainless Series Bearing unit)

**Table 4.3 (3) Other cast iron units**

| Housing Type<br>Material : Cast Iron | | Cover | Bearing Type | | | | | |
|---|---|---|---|---|---|---|---|---|
| | | | UC | UEL<br>REL | UK | AS<br>AR | AEL<br>JEL | CS |
| Take-up | | – | UCT | UELT<br>RELT | UKT | AST<br>ART | AELT<br>JELT | – |
| | | Steel | S(M)-UCT | – | S(M)-UKT | S(M)-AST<br>S(M)-ART | – | – |
| | | Cast Iron | C(M)-UCT | – | C(M)-UKT | C(M)-AST<br>C(M)-ART | – | – |
| Cartridge | | – | UCC | UELC<br>RELC | UKC | ASC<br>ARC | AELC<br>JELC | – |
| Hanger | | – | UCHB | UELHB<br>RELHB | UKHB | ASHB<br>ARHB | AELHB<br>JELHB | – |

Remarks 1. The codes "S-" and "C-" at the head of the type codes indicate steel plate covered bearing units and cast iron covered bearing units, respectively.
2. Single-sided closed covered bearing units made of steel and cast iron are also available.
These bearing units are identified with the codes "SM-"(steel plate) and "CM-"(cast iron) at the head of the type codes, respectively.
3. "UC" type stainless steel bearings are also available. For further details, consult **NTN** (Stainless Series Bearing unit)

**Table 4.3 (4) Bearing units with ductile cast iron housing (Ductile series)**

| Housing Type<br>Material :<br>Spheroidal Graphite Cast Iron | | Cover | Bearing Type | | | | | |
|---|---|---|---|---|---|---|---|---|
| | | | UC | UEL<br>REL | UK | AS<br>AR | AEL<br>JEL | CS |
| Pillow Block | | – | UCPE | UELPE<br>RELPE | UKPE | ASPE<br>ARPE | AELPE<br>JELPE | – |
| Rhombus Flange | | – | UCFE | UELFE<br>RELFE | UKFE | ASFE<br>ARFE | AELFE<br>JELFE | – |

Remarks 1. "UC" type stainless steel bearings are also available. For further details, consult **NTN** (Stainless Series Bearing unit).

**Table 4.3 (5) Bearing units steel series**

| Housing Type<br>Material :<br>General Structural Rolled Steel | | Cover | Bearing Type | | | | | |
|---|---|---|---|---|---|---|---|---|
| | | | <br>UC | 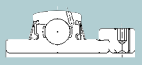 <br>UEL<br> 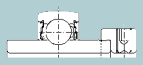 <br>REL | 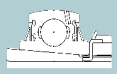 <br>UK | <br>AS<br> <br>AR | 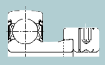 <br>AEL<br> <br>JEL | <br>CS |
| **Pillow Block** | | – | UCPG | UELPG<br>RELPG | UKPG | ASPG<br>ARPG | AELPG<br>JELPG | – |
| | | Steel | S(M)-UCPG | – | S(M)-UKPG | S(M)-ASPG<br>S(M)-ARPG | – | – |
| | | Cast Iron | C(M)-UCPG | – | C(M)-UKPG | C(M)-ASPG<br>C(M)-ARPG | – | – |
| **Thick Pillow Block** | | – | UCIPG | UELIPG<br>RELIPG | UKIPG | – | – | – |
| | | Steel | S(M)-UCIPG | – | S(M)-UKIPG | – | – | – |
| | | Cast Iron | C(M)-UCIPG | – | C(M)-UKIPG | – | – | – |
| **Square Flange** | | – | UCFG | UELFG<br>RELFG | UKFG | ASFG<br>ARFG | AELFG<br>JELFG | – |
| | | Steel | S(M)-UCFG | – | S(M)-UKFG | S(M)-ASFG<br>S(M)-ARFG | – | – |
| | | Cast Iron | C(M)-UCFG | – | C(M)-UKFG | C(M)-ASFG<br>C(M)-ARFG | – | – |
| **Square Flange W/Spigot Joint** | | – | UCFSG | UELFSG | UKFSG | – | – | – |
| | | Cast Iron | C(M)-UCFSG | – | C(M)-UKFSG | – | – | – |
| **Round Flange W/Spigot Joint** | | – | UCFCG | UELFCG<br>RELFCG | UKFCG | ASFCG<br>ARFCG | AELFCG<br>JELFCG | – |
| | | Steel | S(M)-UCFCG | – | S(M)-UKFCG | S(M)-ASFCG<br>S(M)-ARFCG | – | – |
| | | Cast Iron | C(M)-UCFCG | – | C(M)-UKFCG | C(M)-ASFCG<br>C(M)-ARFCG | – | – |
| **Rhombus Flange** | | – | UCFLG | UELFLG<br>RELFLG | UKFLG | ASFLG<br>ARFLG | AELFLG<br>JELFLG | – |
| | | Steel | S(M)-UCFLG | – | S(M)-UKFLG | S(M)-ASFLG<br>S(M)-ARFLG | – | – |
| | | Cast Iron | C(M)-UCFLG | – | C(M)-UKFLG | C(M)-ASFLG<br>C(M)-ARFLG | – | – |
| **Take-up** | | – | UCTG | UELTG<br>RELTG | UKTG | ASTG<br>ARTG | AELTG<br>JELTG | – |
| | | Steel | S(M)-UCTG | – | S(M)-UKTG | S(M)-ASTG<br>S(M)-ARTG | – | – |
| | | Cast Iron | C(M)-UCTG | – | C(M)-UKTG | C(M)-ASTG<br>C(M)-ARTG | – | – |

Remarks 1. The codes "S-" and "C-" at the head of the type codes indicate steel plate covered bearing units and cast iron covered bearing units, respectively.
2. Single-sided closed covered bearing units made of steel and cast iron are also available.
3. "UC" type stainless steel bearings are also available. For further details, consult **NTN** (Stainless Series Bearing unit)

**Table 4.3 (6) Bearing units stainless series**

| Housing Type<br>Material : Stainless Steel | | Cover | Bearing Type | | | | | |
|---|---|---|---|---|---|---|---|---|
| | | | UC | UEL<br>REL | UK | AS<br>AR | AEL<br>JEL | CS |
| **Pillow Block** | | – | F-UCPM | – | – | – | – | – |
| **Rhombus Flange** | | – | F-UCFM | – | – | – | – | – |

**Table 4.3 (7) Bearing units plastic housing series**

| Housing Type<br>Material :<br>Glass Fiber Reinforcing Resin | | Cover | Bearing Type | | | | | |
|---|---|---|---|---|---|---|---|---|
| | | | UC | UEL<br>REL | UK | AS<br>AR | AEL<br>JEL | CS |
| **Pillow Block** | | – | F-UCPR | – | – | – | – | – |
| | | Resin | F-RM-UCPR | – | – | – | – | – |
| **Rhombus Flange** | | – | F-UCFLR | – | – | – | – | – |
| | | Resin | F-RM-UCFLR | – | – | – | – | – |

Remarks 1.The code "RM-" at the head of the type codes indicates single-side closed resin covered unit.

**Table 4.3 (8) Steel plate units**

| Housing Type<br>Material : Steel Plate | | Cover | Bearing Type | | | | | |
|---|---|---|---|---|---|---|---|---|
| | | | UC | UEL<br>REL | UK | AS<br>AR | AEL<br>JEL | CS |
| Pillow Block | | – | – | – | – | ASPP | AELPP | CSPP |
| Pillow Block<br>W/Rubber Ring | | – | – | – | – | ASRPP | AELRPP | CSRPP |
| Round Flange | | – | – | – | – | ASPF | AELPF | CSPF |
| Round Flange<br>W/Rubber Ring | | – | – | – | – | ASRPF | AELRPF | CSRPF |
| Rhombus Flange | | – | – | – | – | ASPFL | AELPFL | CSPFL |
| Rhombus Flange<br>W/Rubber Ring | | – | – | – | – | ASRPFL | AELRPFL | CSRPFL |

**Table 4.3 (9) Stretcher units®**

| | | Cover | Bearing Type | | | | |
|---|---|---|---|---|---|---|---|
| | | | UC | 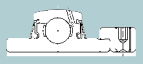 UEL 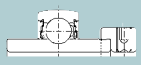 REL | 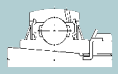 UK | AS AR | 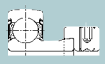 AEL JEL |
| **Mini Type** | | – | – | – | – | ASPT | AELPT |
| **Angle Steel Frame Type** | | – | UCT-00 | UELT-00<br>RELT-00 | UKT-00 | AST-00<br>ART-00 | AELT-00<br>JELT-00 |
| | | Steel | S(M)-UCT-00 | – | S(M)-UKT-00 | S(M)-AST-00<br>S(M)-ART-00 | – |
| | | Cast Iron | C(M)-UCT-00 | – | C(M)-UKT-00 | C(M)-AST-00<br>C(M)-ART-00 | – |
| **Light Channel Steel Frame Type** | 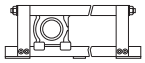 | – | UCL-00 | UELL-00<br>RELL-00 | UKL-00 | ASL-00<br>ARL-00 | AELL-00<br>JELL-00 |
| | | Steel | S(M)-UCL-00 | – | S(M)-UKL-00 | S(M)-ASL-00<br>S(M)-ARL-00 | – |
| | | Cast Iron | C(M)-UCL-00 | – | C(M)-UKL-00 | C(M)-ASL-00<br>C(M)-ARL-00 | – |
| **Channel Steel Frame Type** | 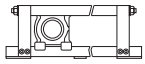 | – | UCM-00 | UELM-00<br>RELM-00 | UKM-00 | ASM-00<br>ARM-00 | AELM-00<br>JELM-00 |
| | | Steel | S(M)-UCM-00 | – | S(M)-UKM-00 | S(M)-ASM-00<br>S(M)-ARM-00 | – |
| | | Cast Iron | C(M)-UCM-00 | – | C(M)-UKM-00 | C(M)-ASM-00<br>C(M)-ARM-00 | – |

Remarks 1. The codes "S-" and "C-" at the head of the type codes indicate steel plate covered bearing units and cast iron covered bearing units, respectively.
2. Single-sided closed covered bearing units made of steel and cast iron are also available.
These bearing units are identified with the codes "SM-"(steel plate) and "CM-"(cast iron) at the head of the type codes, respectively.
3. "UC" type stainless steel bearings are also available. For further details, consult **NTN** (Stainless Series Bearing unit)

# 5. Tolerance

The tolerances of the **NTN** bearing units are in accordance with the following JIS specifications :

## 5.1 Tolerances of ball bearings for the unit

The tolerances of ball bearings used in the unit are shown in the following tables, 5.1 to 5.4.

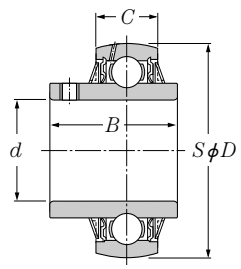


**Set screw type**

**Table 5.1 (1) Cylindrical bore (UC, UCS, AS, ASS, UEL, UELS, AEL, AELS)** Unit: μm/0.0001 inch

| Nominal bore diameter $d$ | | | | Cylindrical bore | | | | | Radial runout $K_{ia}$ (reference) |
|---|---|---|---|---|---|---|---|---|---|
| | | | | Bore diameter | | | Width | | |
| over | | incl. | | $\Delta_{dmp}$ Deviations | | $V_{dp}$ Variations | $\Delta_{Bs}$, $\Delta_{Cs}$ Deviations (reference) | | |
| mm | inch | mm | inch | high | low | max. | high | low | (max) |
| 10 | 0.3937 | 18 | 0.7087 | +15<br>+ 6 | 0<br>0 | 10<br>4 | 0<br>0 | −120<br>− 47 | 15<br>6 |
| 18 | 0.7087 | 31.750 | 1.2500 | +18<br>+ 7 | 0<br>0 | 12<br>5 | 0<br>0 | −120<br>− 47 | 18<br>7 |
| 31.750 | 1.2500 | 50.800 | 2.0000 | +21<br>+ 8 | 0<br>0 | 14<br>6 | 0<br>0 | −120<br>− 47 | 20<br>8 |
| 50.800 | 2.0000 | 80 | 3.1496 | +24<br>+ 9 | 0<br>0 | 16<br>6 | 0<br>0 | −150<br>− 59 | 25<br>10 |
| 80 | 3.1496 | 120 | 4.7244 | +28<br>+11 | 0<br>0 | 19<br>7 | 0<br>0 | −200<br>− 79 | 30<br>12 |
| 120 | 4.7244 | 180 | 7.0866 | +33<br>+13 | 0<br>0 | 22<br>9 | 0<br>0 | −250<br>− 98 | 35<br>14 |

Note: Symbols
$\Delta_{dmp}$: Mean bore diameter deviation $V_{dp}$: Bore diameter variation
$\Delta_{Bs}$: Inner ring width deviation
$\Delta_{Cs}$: Outer ring width deviation

**Table 5.1 (2) Cylindrical bore (AR, ARS, JEL, JELS, REL, RELS)** Unit: μm/0.0001 inch

| Nominal bore diameter $d$ | | | | Cylindrical bore diameter | | |
|---|---|---|---|---|---|---|
| over | | incl. | | $\Delta_{dmp}$ Deviations | | $V_{dp}$ Variations |
| mm | inch | mm | inch | high | low | max. |
| 10 | 0.3937 | 18 | 0.7087 | +13<br>+ 5 | 0<br>0 | 6<br>2 |
| 18 | 0.7087 | 31.750 | 1.2500 | +13<br>+ 5 | 0<br>0 | 6<br>2 |
| 31.750 | 1.2500 | 50.800 | 2.0000 | +13<br>+ 5 | 0<br>0 | 6<br>2 |
| 50.800 | 2.0000 | 80 | 3.1496 | +15<br>+ 6 | 0<br>0 | 8<br>3 |

**Table 5.1 (3) Cylindrical bore (CS)**

Unit: μm/0.0001 inch

| Nominal bore diameter $d$ | | | | Cylindrical bore | | | | | Radial runout $K_{ia}$ (reference) |
|---|---|---|---|---|---|---|---|---|---|
| | | | | Bore diameter | | | Width | | |
| over | | incl. | | $\Delta_{dmp}$ Deviations | | $V_{dp}$ Variations | $\Delta_{Bs}$, $\Delta_{Cs}$ Deviations (reference) | | |
| mm | inch | mm | inch | high | low | max. | high | low | max. |
| 10 | 0.3937 | 18 | 0.7087 | 0<br>0 | −8<br>−3 | 10<br>4 | 0<br>0 | −120<br>−47 | 15<br>6 |
| 18 | 0.7087 | 31.75 | 1.2500 | 0<br>0 | −10<br>−4 | 12<br>5 | 0<br>0 | −120<br>−47 | 18<br>7 |
| 31.75 | 1.2500 | 50.8 | 2.0000 | 0<br>0 | −12<br>−5 | 14<br>6 | 0<br>0 | −120<br>−47 | 20<br>8 |
| 50.8 | 2.0000 | 80 | 3.1496 | 0<br>0 | −15<br>−6 | 16<br>6 | 0<br>0 | −150<br>−59 | 25<br>10 |

**Table 5.2 Tapered bore (UK, UKS)**

Unit: μm/0.0001 inch

| Nominal bore diameter $d$ | | | | $\Delta_{dmp}$ Deviations | | $\Delta_{d1mp}-\Delta_{dmp}$ | | $V_{dp}$ 1) |
|---|---|---|---|---|---|---|---|---|
| over | | incl. | | | | | | |
| mm | inch | mm | inch | high | low | high | low | max. |
| 18 | 0.7087 | 30 | 1.1811 | +33<br>+13 | 0<br>0 | +21<br>+8 | 0<br>0 | 13<br>5 |
| 30 | 1.1811 | 50 | 1.9685 | +39<br>+15 | 0<br>0 | +25<br>+10 | 0<br>0 | 16<br>6 |
| 50 | 1.9685 | 80 | 3.1496 | +46<br>+18 | 0<br>0 | +30<br>+12 | 0<br>0 | 19<br>7 |
| 80 | 3.1496 | 120 | 4.7244 | +54<br>+21 | 0<br>0 | +35<br>+14 | 0<br>0 | 22<br>9 |
| 120 | 4.7244 | 180 | 7.0866 | +63<br>+25 | 0<br>0 | +40<br>+16 | 0<br>0 | 40<br>16 |

1) Applies to all radial flat planes of inner ring tapered bore.
Note: 1. To be applied for tapered bore of 1/12.
2. Symbols of quantity or values

$d_1$: Basic diameter at the theoretical large end of the tapered bore

$$d_1 = d + \frac{1}{12}B$$

$\Delta_{dmp}$: Dimensional difference of the average bore diameter within the flat surface at the theoretical small-end of the tapered bore

$\Delta_{d1mp}$: Dimensional difference of the average bore diameter within the flat surface at the theoretical large-end of the tapered bore

$V_{dp}$: Unevenness of the bore diameter with the flat surface

$B$ : Nominal width of inner ring

$\alpha$ : Half of the tapered bore's nominal taper angle

$\alpha$ =2°23'9.4"
=2.385 94°
=0.041 643rad

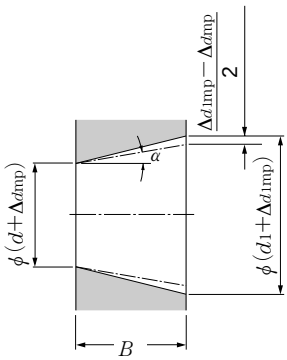


**Tapered bore having dimensional difference of the average bore diameter within the flat surface**

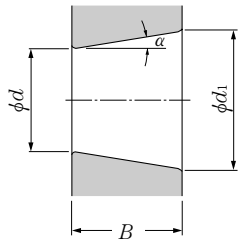


**Theoretical tapered bore**

**Table 5.3 Outer ring** Unit: μm/0.0001 inch

| Nominal outside diameter $D$ | | | | Mean outside diameter deviation $\Delta_{Dm}$ | | Radial runout $K_{ea}$ (reference) |
|---|---|---|---|---|---|---|
| over | | incl. | | | | |
| mm | inch | mm | inch | high | low | max. |
| 18 | 0.7087 | 30 | 1.1811 | 0<br>0 | −9<br>−4 | 15<br>6 |
| 30 | 1.1811 | 50 | 1.9685 | 0<br>0 | −11<br>−4 | 20<br>8 |
| 50 | 1.9685 | 80 | 3.1496 | 0<br>0 | −13<br>−5 | 25<br>10 |
| 80 | 3.1496 | 120 | 4.7244 | 0<br>0 | −15<br>−6 | 35<br>14 |
| 120 | 4.7244 | 150 | 5.9055 | 0<br>0 | −18<br>−7 | 40<br>16 |
| 150 | 5.9055 | 180 | 7.0866 | 0<br>0 | −25<br>−10 | 45<br>18 |
| 180 | 7.0866 | 250 | 9.8425 | 0<br>0 | −30<br>−12 | 50<br>20 |
| 250 | 9.8425 | 315 | 12.4016 | 0<br>0 | −35<br>−14 | 60<br>24 |

Note: 1) The low deviation of outside diameter $D_m$ does not apply within the distance of 1/4 the width of the outer ring from the side.

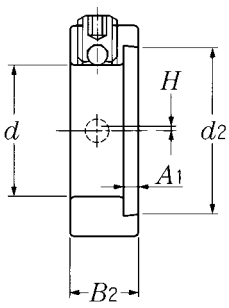


Eccentric locking collar

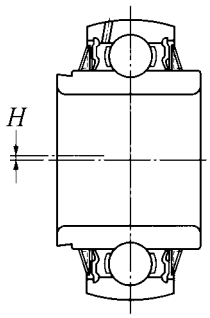


Eccentric locking collar type

**Table 5.4 Eccentric locking collar** Unit: mm/inch

| Nominal bore diameter $d$ | | | | Bore diameter deviation $\Delta_{ds}$ | | Small bore diameter of eccentric surface deviation $\Delta_{d2s}$ | | Eccentricity deviation $\Delta_{Hs}$ | | Collar width deviation $\Delta_{B2s}$ | | Collar eccentric surface width deviation $\Delta_{A1s}$ | |
|---|---|---|---|---|---|---|---|---|---|---|---|---|---|
| over | | incl. | | | | | | | | | | | |
| mm | inch | mm | inch | high | low | high | low | high | low | high | low | high | low |
| 10 | 0.3937 | 36.512 | 1.4375 | +0.250<br>+0.010 | +0.025<br>+0.001 | +0.3<br>+0.012 | 0<br>0 | +0.1<br>+0.004 | −0.1<br>−0.004 | +0.270<br>+0.011 | −0.270<br>−0.011 | 0<br>0 | −0.180<br>−0.007 |
| 36.512 | 1.4375 | 55.562 | 2.1875 | +0.300<br>+0.012 | +0.025<br>+0.001 | +0.4<br>+0.016 | 0<br>0 | +0.1<br>+0.004 | −0.1<br>−0.004 | +0.330<br>+0.013 | −0.330<br>−0.013 | 0<br>0 | −0.180<br>−0.007 |
| 55.562 | 2.1875 | 61.912 | 2.4375 | +0.300<br>+0.012 | +0.025<br>+0.001 | +0.4<br>+0.016 | 0<br>0 | +0.1<br>+0.004 | −0.1<br>−0.004 | +0.330<br>+0.013 | −0.330<br>−0.013 | 0<br>0 | −0.220<br>−0.009 |

## 5.2 Tolerances of housings

**Table 5.5 Spherical bore diameter of housings**

Unit: μm/0.0001 inch

| Nominal spherical bore diameter $D_a$ | | | | $D_a$ Deviations $\Delta_{Dam}$ | | | | | |
|---|---|---|---|---|---|---|---|---|---|
| over | | incl. | | Tolerance class H7 | | Tolerance class J7 | | Tolerance class K7 | |
| mm | inch | mm | inch | high | low | high | low | high | low |
| 30 | 1.1811 | 50 | 1.9685 | +25<br>+10 | 0<br>0 | +14<br>+ 6 | −11<br>− 4 | + 7<br>+ 3 | −18<br>− 7 |
| 50 | 1.9685 | 80 | 3.1496 | +30<br>+12 | 0<br>0 | +18<br>+ 7 | −12<br>− 5 | + 9<br>+ 4 | −21<br>− 8 |
| 80 | 3.1496 | 120 | 4.7244 | +35<br>+14 | 0<br>0 | +22<br>+ 9 | −13<br>− 5 | – | – |
| 120 | 4.7244 | 180 | 7.0866 | +40<br>+16 | 0<br>0 | +26<br>+10 | −14<br>− 6 | – | – |
| 180 | 7.0866 | 250 | 9.8425 | +46<br>+18 | 0<br>0 | +30<br>+12 | −16<br>− 6 | – | – |
| 250 | 9.8425 | 315 | 12.4016 | +52<br>+20 | 0<br>0 | +36<br>+14 | −16<br>− 6 | – | – |

Note: 1) Symbols $\Delta_{Dam}$: Mean spherical bore diameter deviation
2) Dimensional tolerances for spherical bore diameter of housing are classified as H7 for clearance fit, and J7 for intermediate fit.
3) The housing bore diameter for a spherical OD bearing insert would use the following fit;
Housing bore diameter ≦ 52mm : K7 fit
52mm < Housing bore diameter ≦180mm : J7 fit
Housing bore diameter > 180mm : H7 fit

**Table 5.6 (1) Pillow block housings**

Unit: mm/inch

| Housing numbers | | | $H$ Deviations $\Delta_{Hs}$ |
|---|---|---|---|
| P, IP, HP, UP<br>PB, PM, PL<br>PE, PG, IPG | P, IP<br>PG, IPG | P | |
| 201 | – | – | ±0.15<br>±0.006 |
| 203 | – | – | |
| 204 | – | – | |
| 205 | 305 | X05 | |
| 206 | 306 | X06 | |
| 207 | 307 | X07 | |
| 208 | 308 | X08 | |
| 209 | 309 | X09 | |
| 210 | 310 | X10 | |
| 211 | 311 | X11 | ±0.2<br>±0.008 |
| 212 | 312 | X12 | |
| 213 | 313 | X13 | |
| 214 | 314 | X14 | |
| 215 | 315 | X15 | |
| 216 | 316 | X16 | |
| 217 | 317 | X17 | |
| 218 | 318 | X18 | |
| – | 319 | – | ±0.3<br>±0.012 |
| – | 320 | X20 | |
| – | 321 | – | |
| – | 322 | – | |
| – | 324 | – | |
| – | 326 | – | |
| – | 328 | – | |

Note: 1) $H$ is height of the shaft center line.
2) This table can be applied for bearing units with dust covers.

**Table 5.6 (2) Pillow block resin housings**

Unit: mm/inch

| Housing numbers | $H$ Deviations $\Delta_{Hs}$ |
|---|---|
| PR204 | ±0.25<br>±0.010 |
| PR205 | |
| PR206 | |
| PR207 | |
| PR208 | |

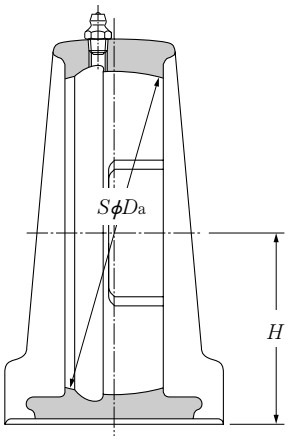

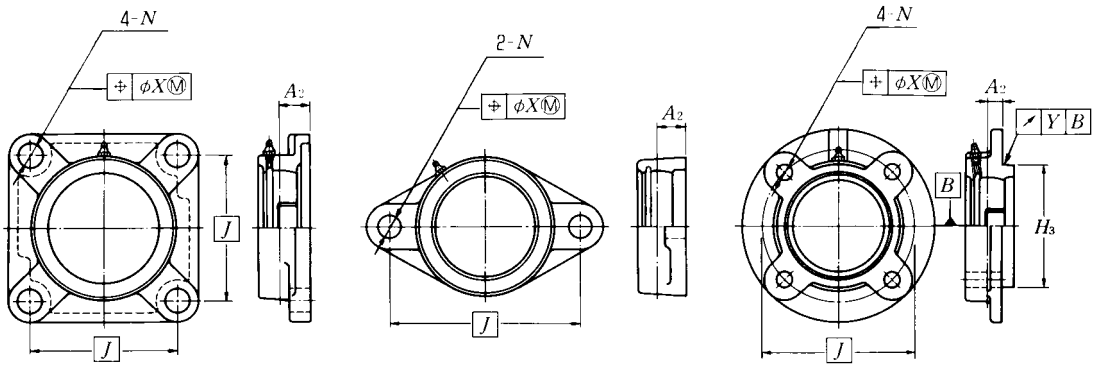


(F, FU, FS, FG, FSG) (FL, FLU, FB, FM, FD, FLG) (FC)

**Table 5.7 (1) Flange unit housings** Unit: mm/inch

| Housing numbers | | | location tolerance of bolt hole | $A_2$ Deviations $\Delta_{A2s}$ | $H_3$ Deviations | | | | | | Radial runout of spigot joint $\Delta_{is}$ (max.) |
|---|---|---|---|---|---|---|---|---|---|---|---|
| | | | | | FC2, FCG2 | | FS3, FSG3 | | FCX | | |
| F, FU,FC FL, FLU FB, FM, FD FG, FCG, FLG | F, FL, FS FG, FLG FSG | F, FC, FL | | | high | low | high | low | high | low | |
| 201 | – | – | 0.7<br>0.028 | ±0.5<br>±0.020 | 0<br>0 | –0.046<br>–0.0018 | — | — | — | — | 0.2<br>0.008 |
| 204 | – | – | | | | | 0<br>0 | –0.046<br>–0.0018 | 0<br>0 | –0.046<br>–0.0018 | |
| 205 | 305 | X05 | | | | | 0<br>0 | –0.054<br>–0.0021 | 0<br>0 | –0.054<br>–0.0021 | |
| 206 | 306 | X06 | | | 0<br>0 | –0.054<br>–0.0021 | | | | | |
| 207 | 307 | X07 | | | | | 0<br>0 | –0.063<br>–0.0025 | | | |
| 208 | 308 | X08 | | | | | | | | | |
| 209 | 309 | X09 | | | | | | | | | |
| 210 | 310 | X10 | | | | | | | | | |
| 211 | 311 | X11 | 1<br>0.039 | ±0.8<br>±0.032 | 0<br>0 | –0.063<br>–0.0025 | | | 0<br>0 | –0.063<br>–0.0025 | 0.3<br>0.012 |
| 212 | 312 | X12 | | | | | | | | | |
| 213 | 313 | X13 | | | | | 0<br>0 | –0.072<br>–0.0028 | | | |
| 214 | 314 | X14 | | | | | | | 0<br>0 | –0.072<br>–0.0028 | |
| 215 | 315 | X15 | | | | | | | | | |
| 216 | 316 | X16 | | | | | | | | | |
| 217 | 317 | X17 | | | | | | | | | |
| 218 | 318 | X18 | | | 0<br>0 | –0.072<br>–0.0028 | | | | | |
| – | 319 | – | | | — | — | | | | | 0.4<br>0.016 |
| – | 320 | X20 | | | | | 0<br>0 | –0.081<br>–0.0032 | — | — | |
| – | 321 | – | | | | | | | | | |
| – | 322 | – | | | | | 0<br>0 | –0.089<br>–0.0035 | | | |
| – | 324 | – | | | | | | | | | |
| – | 326 | – | | | | | | | | | |
| – | 328 | – | | | | | | | | | |

Note: 1) $J$ is the bolt hole's center line dimension, and P,C,D. $A_2$ is distance between the center line of spherical bore diameter of the housing and mounting surfaces, and $H_3$ is outside diameter of the spigot joint.
2) Radial runout of spigot joint is applied for flange units with spigot joints.
3) This table can be applied for bearing units with dust covers.

**Table 5.7 (2) Flange unit housings (diameter of bolt hole)** Unit: mm/inch

| Housing type | Nominal bore diameter $N$ | | | | $N$ Deviations $\Delta_{Ns}$ | |
|---|---|---|---|---|---|---|
| | over | | incl. | | | |
| | mm | inch | mm | inch | mm | inch |
| F, FL, FC, FS, FB, FD FA, FH, FU, FLU, FM FG, FLG, FCG, FSG | – | – | 30 | 1.1811 | ±0.2 | ±0.008 |
| | 30 | 1.1811 | 51 | 2.008 | ±0.3 | ±0.012 |

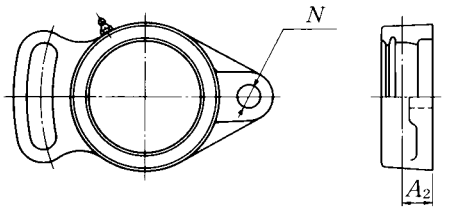


(FA)

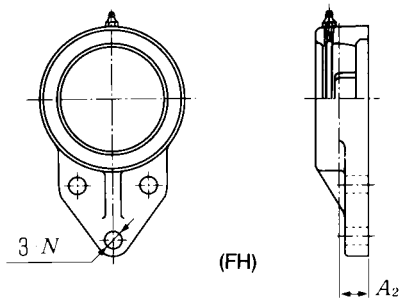


(FH)

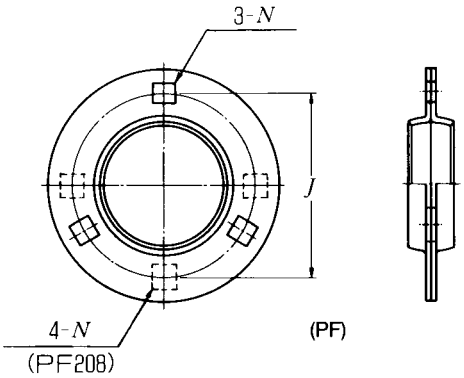


(PF)

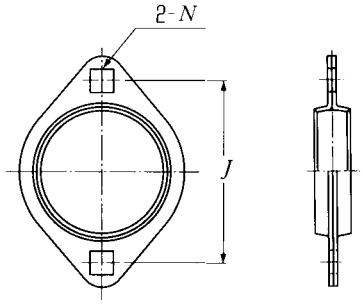


(PFL)

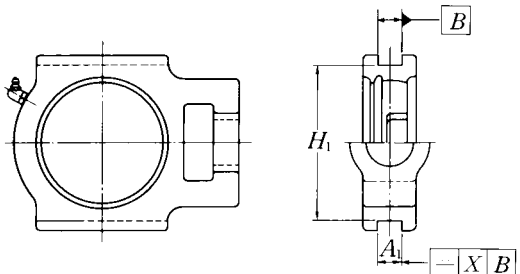


(T, TG)

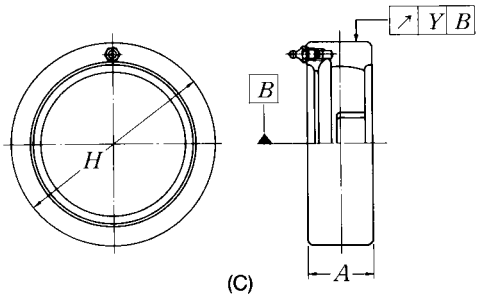


(C)

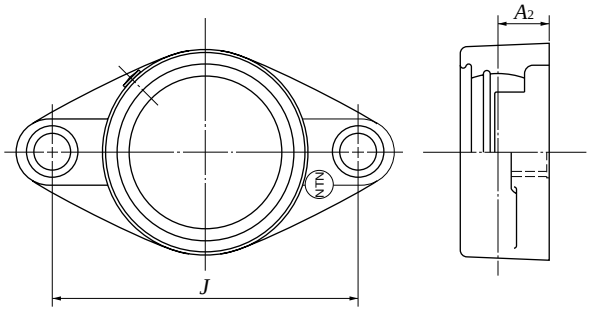


(FLR)

**Table 5.8 (1) Flanged units housings (FH, FA, PF, PFL)** Unit: mm/inch

| Housing numbers | $A_2$ Deviations $\Delta_{A2s}$ | Housing numbers | $J$ Deviations $\Delta_{Js}$ | $N$ Deviations $\Delta_{Ns}$ |
|---|---|---|---|---|
| — | ±0.5 ±0.020 | PF203 | ±0.4 ±0.016 | ±0.25 ±0.010 |
| FH, FA204 | | PF204 | | |
| FH, FA205 | | PF205 | | |
| FH, FA206 | | PF206 | | |
| FH, FA207 | | PF207 | | |
| FH, FA208 | | PF208 | | |
| FH, FA209 | | PFL203 | | |
| FH, FA210 | | PFL204 | | |
| | | PFL205 | | |
| FA211 | ±0.8 ±0.032 | PFL206 | | |
| | | PFL207 | | |

Note: 1) $A_2$ is distance between the center line of spherical bore diameter of housings.
2) $J$ is the bolt hole's center line dimension.

**Table 5.8 (2) Flanged units housings (FLR)** Unit: mm/inch

| Housing numbers | $J$ Deviations $\Delta_{Js}$ | $A_2$ Deviations $\Delta_{A2s}$ |
|---|---|---|
| FLR204 | ±0.7 ±0.028 | ±0.5 ±0.020 |
| FLR205 | | |
| FLR206 | | |
| FLR207 | | |
| FLR208 | | |

**Table 5.9 Take-up unit housings (T, TG)** Unit: mm/inch

| Housing numbers | | | $A_1$ Deviations $\Delta_{A1s}$ | $H_1$ Deviations $\Delta_{H1s}$ | | Parallelism of guide |
|---|---|---|---|---|---|---|
| T, TG | T, TG | T | | high | low | |
| 204 | — | — | +0.2<br>0<br>+0.008<br>0 | 0<br>0 | –0.5<br>–0.020 | 0.5<br>0.020 |
| 205 | 305 | X05 | | | | |
| 206 | 306 | X06 | | | | |
| 207 | 307 | X07 | | | | |
| 208 | 308 | X08 | | | | |
| 209 | 309 | X09 | | | | |
| 210 | 310 | X10 | | | | |
| 211 | 311 | X11 | +0.3<br>0<br>+0.012<br>0 | 0<br>0 | –0.8<br>–0.032 | 0.6<br>0.024 |
| 212 | 312 | X12 | | | | |
| 213 | 313 | X13 | | | | |
| 214 | 314 | X14 | | | | |
| 215 | 315 | X15 | | | | |
| 216 | 316 | X16 | | | | |
| 217 | 317 | X17 | | | | |
| — | 318 | — | | | | |
| — | 319 | — | | | | 0.7<br>0.028 |
| — | 320 | — | | | | |
| — | 321 | — | | | | |
| — | 322 | — | | | | |
| — | 324 | — | | | | 0.8<br>0.032 |
| — | 326 | — | | | | |
| — | 328 | — | | | | |

Note: 1) $A_1$ is the width of guide rail grooves.
2) $H_1$ is the maximum span of guide rail grooves.
3) This table can be applied for bearing units with dust covers.

**Table 5.10 Cartridge unit housings (C)** Unit: mm/inch

| Housing numbers | | | $H$ Deviations $\Delta_{Hs}$ | | | | | | Radial runout of outside surface | $A$ Deviations $\Delta_{As}$ |
|---|---|---|---|---|---|---|---|---|---|---|
| | | | C2 | | C3 | | CX | | | |
| | | | high | low | high | low | high | low | | |
| C204 | — | — | 0<br>0 | –0.030<br>–0.0012 | — | — | — | — | 0.2<br>0.008 | ±0.2<br>±0.008 |
| C205 | C305 | CX05 | | | 0<br>0 | –0.035<br>–0.0014 | 0<br>0 | –0.035<br>–0.0014 | | |
| C206 | C306 | CX06 | 0<br>0 | –0.035<br>–0.0014 | | | | | | |
| C207 | C307 | CX07 | | | | | | | | |
| C208 | C308 | CX08 | | | | | | | | |
| C209 | C309 | CX09 | | | | | | | | |
| C210 | C310 | CX10 | | | 0<br>0 | –0.040<br>–0.0016 | 0<br>0 | –0.040<br>–0.0016 | | |
| C211 | C311 | CX11 | 0<br>0 | –0.040<br>–0.0016 | | | | | 0.3<br>0.012 | ±0.3<br>±0.012 |
| C212 | C312 | CX12 | | | | | | | | |
| C213 | C313 | — | — | — | | | — | — | | |
| — | C314 | — | | | 0<br>0 | –0.046<br>–0.0018 | | | | |
| — | C315 | — | | | | | | | | |
| — | C316 | — | | | | | | | | |
| — | C317 | — | | | | | | | | |
| — | C318 | — | | | | | | | | |
| — | C319 | — | | | | | | | | |
| — | C320 | — | | | 0<br>0 | –0.052<br>–0.0020 | | | 0.4<br>0.016 | |
| — | C321 | — | | | | | | | | |
| — | C322 | — | | | | | | | | |
| — | C324 | — | | | 0<br>0 | –0.057<br>–0.0022 | | | | |
| — | C326 | — | | | | | | | | |
| — | C328 | — | | | | | | | | |

Note: 1) $H$ is the outside diameter of cartridge housings.
2) $A$ is width of cartridge housings.

# 6. Basic Load Rating and Life

## 6.1 Bearing life

Even in bearings operating under normal conditions, the surfaces of the raceway and rolling elements are constantly being subjected to repeated compressive stresses which cause flaking of these surfaces to occur. This flaking is due to material fatigue and will eventually cause the bearings to fail. The effective life of a bearing is usually defined in terms of the total number of revolutions a bearing can undergo before flaking of either the raceway surface or the rolling element surfaces occurs.

Other causes of bearing failure are often attributed to problems such as seizing, abrasions, cracking, chipping, gnawing, rust, etc. However, these so called "causes" of bearing failure are usually themselves caused by improper installation, insufficient or improper lubrication, faulty sealing or inaccurate bearing selection. Since the above mentioned "causes" of bearing failure can be avoided by taking the proper precautions, and are not simply caused by material fatigue, they are considered separately from the flaking aspect.

## 6.2 Basic rating life and basic dynamic load rating

A group of seemingly identical bearings when subjected to identical load and operating conditions will exhibit a wide diversity in their durability.

This "life" disparity can be accounted for by the difference in the fatigue of the bearing material itself. This disparity is considered statistically when calculating bearing life, and the basic rating life is defined as follows.

The basic rating life is based on a 90% statistical model which is expressed as the total number of revolutions 90% of the bearings, in an identical group of bearings subjected to identical operating conditions, will attain or surpass before flaking due to material fatigue occurs. For bearings operating at fixed constant speeds, the basic rating life (90% reliability) is expressed in the total number of hours of operation.

The basic dynamic load rating is an expression of the load capacity of a bearing based on a constant load which the bearing can sustain for one million revolutions (the basic life rating). For radial bearings this rating applies to pure radial loads, and for thrust bearings it refers to pure axial loads. The basic dynamic load ratings given in the bearing tables of this catalog are for bearings constructed of **NTN** standard bearing materials, using standard manufacturing techniques. Please consult **NTN** for basic load ratings of bearings constructed of special materials or using special manufacturing techniques.

The relationship between the basic rated life, the basic dynamic load rating and the bearing load is given in formula (6.1).

$$L_{10} = \left(\frac{C_r}{P_r}\right)^3 \quad \cdots\cdots \quad (6.1)$$

where,
$L_{10}$: Basic rating life $10^6$ revolutions
$C_r$: Basic dynamic load rating, N, lbf
$P_r$: Equivalent dynamic load, N, lbf

The basic rated life can also be expressed in terms of hours of operation (revolution), and is calculated as shown in formula (6.2).

$$L_{10h} = 500 f_h^3 \quad \cdots\cdots \quad (6.2)$$

$$f_h = f_n \frac{C_r}{P_r} \quad \cdots\cdots \quad (6.3)$$

$$f_n = \left(\frac{33.3}{n}\right)^{1/3} \quad \cdots\cdots \quad (6.4)$$

where,
$L_{10h}$: Basic rating life, h
$f_h$: Life factor
$f_n$: Speed factor
$n$: Rotational speed, $min^{-1}$

Formula (6.2) can also be expressed as shown in formula (6.5).

$$L_{10h} = \frac{10^6}{60n}\left(\frac{C_r}{P_r}\right)^3 \quad \cdots\cdots \quad (6.5)$$

The relation between rotational speed $n$ and speed factor $f_n$ as well as the relation between the basic rated life $L_{10h}$ and the life factor $f_h$ is shown in Fig. 6.1.

When several bearings are incorporated in machines or equipment as complete units, all the bearings in the unit are considered as a whole when computing bearing life (see formula 6.6). The total bearing life of the unit is a life rating based on the viable lifetime of the unit before even one of the bearings fails due to rolling contact fatigue.

$$L = \frac{1}{\left(\frac{1}{L_1^{1.1}} + \frac{1}{L_2^{1.1}} + \cdots\cdots + \frac{1}{L_n^{1.1}}\right)^{1/1.1}} \quad \cdots\cdots \quad (6.6)$$

where,
$L$: Total life of the whole bearing assembly h
$L_1, L_2 \cdots L_n$: Rated life of bearings 1, 2, $\cdots n$, h

In the case where load and the number of revolutions change at regulated intervals, after finding the rated life $L_1, L_2, \cdots, L_n$ under conditions of $n_1$, $p_1$ : $n_2$, $p_2$ : $n_n$, $p_n$; the built-in life $L_m$ can be given by the formula (6.7).

$$L_1 = \frac{10^6}{60 n_1} \left(\frac{C_r}{P_1}\right)^3$$

$$L_2 = \frac{10^6}{60 n_2} \left(\frac{C_r}{P_2}\right)^3$$

$$\vdots$$

$$L_n = \frac{10^6}{60 n_n} \left(\frac{C_r}{P_n}\right)^3$$

$$L_m = \left(\frac{\phi_1}{L_1} + \frac{\phi_2}{L_2} + \cdots\cdots \frac{\phi_n}{L_n}\right)^{-1} \cdots\cdots\cdots\cdots\cdots \quad (6.7)$$

where,
$L_1, L_2, \cdots, L_n$: Rated life under condition 1, 2, $\cdots n$, h
$n_1, n_2, \cdots, n_n$: Number of revolutions under condition 1, 2, $\cdots n$, $min^{-1}$
$P_1, P_2, \cdots, P_n$: Equivalent load under condition 1, 2, $\cdots n$, N, lbf
$\phi_1, \phi_2, \cdots, \phi_n$: Ratio of condition 1, 2, $\cdots n$, accounting for the total operating time
$L_m$: Built-in life, h

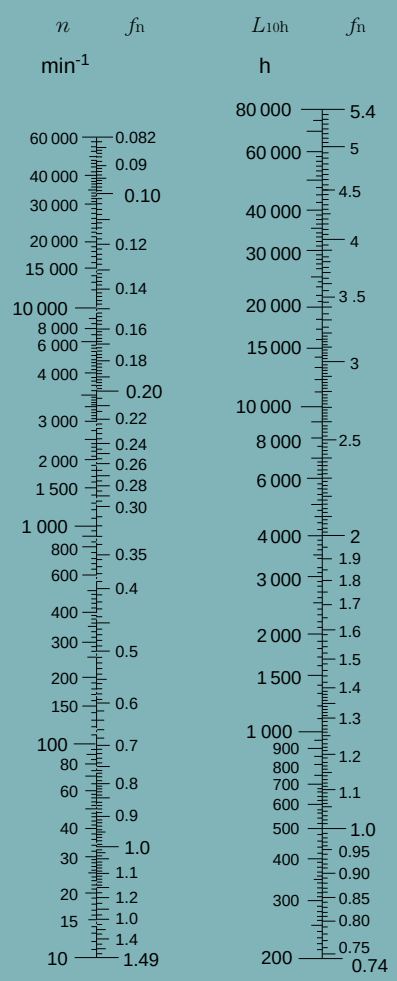


**Fig. 6.1 Bearing life rating scale**

**Table 6.1 Rating life for applications**

| Service classification | Machine application | Life time $L_n$ |
|---|---|---|
| Machines used occasionally | Door mechanisms, Garage shutter | 500 |
| Equipment for short period or intermittent serviceinterruption permissible | Household appliances, Electric hand tools, Agricultural machines, Lifting tackles in shops | 4 000～ 8 000 |
| Intermittent service machines-high reliability | Power-Station auxiliary equipment, Elevators, Conveyors, Deck cranes | 8 000～ 14 000 |
| Machines used for 8 hours a day, but not always in full operation | Ore wagon axles, Important gear units | 14 000～ 20 000 |
| Machines fully used for 8 hours | Blowers, General machinery in shops, Continuous operation cranes | 20 000～ 30 000 |
| Machines continuously used for 24 hours a day | Compressors, Pumps | 50 000～ 60 000 |
| Machines continuously used for 24 hours a day with maximum reliability | Power-station equipment, Water-supply equipment for urban areas, Mine ventilators | 100 000～200 000 |

## 6.3 Machine applications and requisite life

When selecting a bearing, it is essential that the requisite life of the bearing be established in relation to the operating conditions. The requisite life of the bearing is usually determined by the type of machine the bearing is to be used in, and duration of service and operational reliability requirements. A general guide to these requisite life criteria is shown in Table 6.1. When determining bearing size, the fatigue life of the bearing is an important factor; however, besides bearing life, the strength and rigidity of the shaft and housing must also be taken into consideration.

## 6.4 Adjusted life rating factor

The basic bearing life rating (90% reliability factor) can be calculated through the formulas mentioned earlier in Section 6.2. However, in some applications a bearing life factor of over 90% reliability may be required. To meet these requirements, bearing life can be lengthened by the use of specially improved bearing materials or special construction techniques. Moreover, according to elastohydrodynamic lubrication theory, it is clear that the bearing operating conditions (lubrication, temperature, speed, etc.) all exert an effect on bearing life. All these adjustment factors are taken into consideration when calculating bearing life, and using the life adjustment factor as prescribed in ISO 281, the adjusted bearing life can be arrived at.

$$L_{na} = a_1 a_2 a_3 \left(\frac{C}{P}\right)^3 \quad \text{----------} \quad (6.8)$$

where,

$L_{na}$ : Adjusted rating life in millions of revolutions ($10^6$)
$a_1$ : Reliability factor
$a_2$ : Bearing characteristics factor
$a_3$ : Operating conditions factor

### 6.4.1 Reliability factor $a_1$

The values for the reliability adjustment factor $a_1$ (for a reliability factor higher than 90%) can be found in Table 6.2.

### 6.4.2 Bearing characteristics factor $a_2$

The life of a bearing is affected by the material type and quality as well as the manufacturing process. In this regard, the life is adjusted by the use of an $a_2$ factor.

The basic dynamic load ratings listed in the catalog are based on **NTN**'s standard material and process, therefore, the adjustment factor $a_2 = 1$. When special materials or processes are used the adjustment factor $a_2$ can be larger than 1.

**NTN** bearings can generally be used up to 120˚C. If bearings are operated at a higher temperature, the bearing must be specially heat treated (stabilized) so that inadmissible dimensional change does not occur due to micro-structure change. This special heat treatment might cause the reduction of bearing life because of a hardness change.

**Table 6.2 Reliability factor $a_1$**

| Reliability % | $L_n$ | Reliability factor $a_1$ |
|---|---|---|
| 90 | $L_{10}$ | 1.00 |
| 95 | $L_5$ | 0.62 |
| 96 | $L_4$ | 0.53 |
| 97 | $L_3$ | 0.44 |
| 98 | $L_2$ | 0.33 |
| 99 | $L_1$ | 0.21 |

### 6.4.3 Operating conditions factor $a_3$

Operating conditions factor $a_3$ is used to compensate for when lubrication condition worsens due to rise in temperature or rotational speed, lubricant deteriorates, or becomes contaminated with foreign matter.

Generally speaking, when lubricating conditions are satisfactory, the $a_3$ factor has a value of one; and when lubricating conditions are exceptionally favorable, and all other operating conditions are normal, $a_3$ can have a value greater than one.

However, when lubricating conditions are particularly unfavorable and the oil film formation on the contact surfaces of the raceway and rolling elements is insufficient, the value of $a_3$ becomes less than one. This insufficient oil film formation can be caused, for example, by the lubricating oil viscosity being too low for the operating temperature (below 13 $mm^2/s$ for ball bearings) ; or by exceptionally low rotational speed ($n$ $min^{-1}$ X $d_p$ mm less than 10000). For bearings used under special operating conditions, please consult **NTN**.

● Bearing operating temperature is too high

If bearing operating temperature is too high, the raceway becomes softened, thereby shortening life.

Life is adjusted by multiplying by the values given in fig.6.2 as the operating condition factor according to operating temperature. This however does not apply to bearings that have been treated to stabilize dimensions.

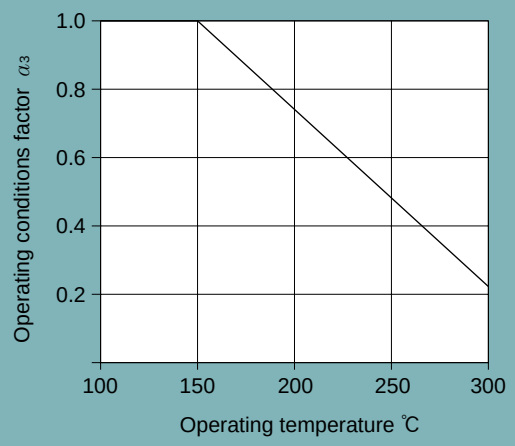


**Fig. 6.2 Operating conditions factor according to operating temperature**

## 6.5 Basic static load rating

When stationary rolling bearings are subjected to static loads, they suffer from partial permanent deformation of the contact surfaces at the contact point between the rolling elements and the raceway. The amount of deformity increases as the load increases, and if this increase in load exceeds certain limits, the subsequent smooth operation of the bearing is impaired.

It has been found through experience that a permanent deformity of 0.0001 times the diameter of the rolling element, occurring at the most heavily stressed contact point between the raceway and the rolling elements, can be tolerated without any impairment in running efficiency.

The basic rated static load refers to a fixed static load limit at which a specified amount of permanent deformation occurs. It applies to pure radial loads for radial bearings. The maximum applied load values for contact stress occurring at the rolling element and raceway contact points are given below.

For ball bearings (for bearing unit) : 4200 Mpa.

## 6.6 Allowable static equivalent load

Generally the static equivalent load which can be permitted (see section 7.3) is limited by the basic static rated load as stated in Section 6.5. However, depending on requirements regarding friction and smooth operation, these limits may be greater or lesser than the basic static rated load.

In the following formula (6.9) and Table 6.4 the safety factor $S_o$ can be determined considering the maximum static equivalent load.

$$S_o = \frac{C_o}{P_{o\,max}} \quad \cdots\cdots (6.9)$$

where,

$S_o$: Safety factor

$C_o$: Basic static load rating, N, lbf

$P_{o\,max}$: Maximum static equivalent load, N, lbf

**Table 6.4 Minimum safety factor values $S_o$**

| Operating conditions | Ball bearings |
|---|---|
| High rotational accuracy demand | 2 |
| Normal rotating accuracy demand (Universal application) | 1 |
| Slight rotational accuracy deterioration permitted (Low speed, heavy loading, etc.) | 0.5 |

Note :1) When vibration and/or shock loads are present, a load factor based on the shock load needs to be included in the $P_{o\,max}$ value.

# 7. Loads

## 7.1 Load acting on the bearing

It is very rare that the load on a bearing can be obtained by a simple calculation. Loads applied to the bearing generally include the weight of the rotating element itself, the load produced by the working of the machine, and the load resulting from transmission of power by the belt and gearwheel. Such loads include the radial load, which works on the bearing at right angles to its axis, and the thrust load, which works on the bearing parallel to its axis. These can work either singly or in combination. In addition, the operation of a machine inevitably produces a varying degree of vibrations and shocks. To take this into account, the theoretical value of a load is multiplied by a safety factor that has been derived from past experience. This is known as the "load factor".

Load acting on the bearing =
Load factor $f_w$ × Calculated load

Table 7.1 below shows the generally accepted load factors $f_w$ which correspond to the degree of shock to which the machine is subjected.

### 7.1.1 Load applied to the bearing by power transmission

The force working on the shaft when power is transmitted by belts, chains or gearwheels is obtained, in general, by the following formula:

$$T = 9\,550\,\frac{H}{n},\ 84\,500\,\frac{H}{n} \quad \cdots\cdots\cdots \quad (7.1)$$

$$K_t = \frac{T}{r} \quad \cdots\cdots\cdots\cdots\cdots\cdots\cdots\cdots\cdots\cdots \quad (7.2)$$

where,
$T$ : Torque, N·m, lbf·inch.
$H$ : Transmission power, kW
$n$ : Rotational speed, $min^{-1}$
$K_t$ : Transmission force (effective transmission force of belt or chain; tangential force of gearwheel), N, lbf
$r$: effective radius of belt pulley, sprocket wheel or gearwheel, m, inch

Accordingly, the load actually applied to the shaft by the transmission force can be obtained by the following formula:

Actual load = Factor × $K_t$ ····· (7.3)

Different factors are adopted according to the transmission system in use. These will be dealt with in the following paragraphs.

**Belt transmission**

When power is transmitted by belt, the effective transmission force working on the belt pulley is calculated by formula (7.2). The term "effective transmission force of the belt" refers to the difference in tension between the tensioned side and the loose side of the belt. Therefore, to obtain the load actually acting on the shaft through the medium of the belt pulley, it is necessary to multiply the effective transmission force by a factor which takes into account the type of belt and the initial tension. This is known as the "belt factor".

**Table 7.1 Load factors $f_w$**

| Load conditions | $f_w$ | Examples |
|---|---|---|
| Little or no shock | 1 to 1.2 | Machines tools, electric machines, etc. |
| Some degree of shock; machines with reciprocating parts | 1.2 to 1.5 | Vehicles, driving mechanism, metal-working machinery, steel-making machines, paper-making machinery, rubber mixing machines, hydraulic equipment, hoists, transportation machinery, power-transmission equipment, woodworking machines, printing machines, etc. |
| violent shocks | 1.5 to 3 | Agricultural machines, vibrator screens, ball and tube mills, etc. |

In the case of power transmission by belts, gear wheels, etc., load factors adopted are somewhat different from the above.
Factors used for power transmission by belts, gearwheels and chains, respectively, are given in the following sections.

**Table 7.2 Belt factors $f_b$**

| Belt type | $f_b$ |
|---|---|
| V-belt | 1.5 to 2.0 |
| Timing belt | 1.1 to 1.3 |
| Flat belt (with tension pulley) | 2.5 to 3.0 |
| Flat belt | 3.0 to 4.0 |

Note :In cases where the distance between shafts is short, the revolution speed is low, or where operating conditions are severe, the higher $f_b$ values should be adopted.

**Gear transmission**

In the case of gear transmissions, the theoretical gear load can be calculated from the transmission force and the type of gear. With spur gears, only a radial load is involved; whereas, with helical gears and bevel gears, an additional axial load is present.

The simplest case is that of spur gears. In this instance, the tangential force $K_t$ is obtained from the formula (7.2) and the radial force $K_s$ can be obtained from the following formula:

$$K_s = K_t \cdot \tan \alpha \quad \cdots\cdots \quad (7.4)$$

where,

$\alpha$ : is the pressure angle of the gear.

Accordingly, the theoretical composite force, $K_r$, working on the gear is obtained from the following formula:

$$K_r = \sqrt{K_t^2 + K_s^2} = K_t \cdot \sec \alpha \quad \cdots\cdots \quad (7.5)$$

Therefore, to obtain the radial load actually working on the shaft, the theoretical composite force, as above, is multiplied by a factor in which the accuracy and the degree of precision of the gear is taken into account. This is called the "gear factor" and is represented by the symbol $f_z$. In Table 7.3 is below, $f_z$ values for spur wheels are given.

The gear factor is essentially almost the same as the previously described load factor, $f_w$. In some cases, however, vibrations and shocks are produced also by the machine of which the gear is a part. Here it is necessary to calculate the actual load working on the gear by further multiplying the gear load, as obtained above, by the load factor shown in Table 7.1, according to the degree of shock.

**Table 7.3 Gear factors $f_z$**

| Gear | $f_z$ |
|---|---|
| Precision gears (tolerance 0.02 mm 0.0008 inch max., for both pitch and shape) | 1.05 to 1.1 |
| Gears finished by ordinary machining work (tolerance 0.02 to 0.1 mm, 0.0008 to 0.0039 inch for both pitch and shape) | 1.1 to 1.3 |

**Chain transmission**

When power is transmitted by chain, the effective transmission force working on the sprocket wheel is calculated by formula (7.2). To obtain the load actually working, the effective transmission force must be multiplied by the "chain factor", 1.2 to 1.5.

**7.1.2 Distribution of the radial load**

The load acting on the shaft is distributed to the bearings which support the shaft.

In Fig. 7.1, the load is applied to the shaft between two bearings; in Fig. 7.2 the load is applied to the shaft outside the two bearings. In practice, however, most cases are combinations of Fig. 7.1 and 7.2, and the load is usually a composite load, that is to say, a combination of radial and axial loads. Therefore they are calculated by the methods described in the following sections.

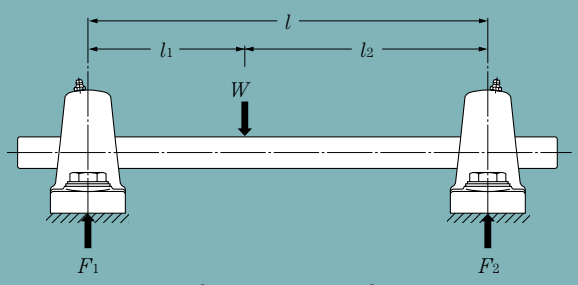


$$F_1 = \frac{l_2}{l} \cdot W \qquad F_2 = \frac{l_1}{l} \cdot W$$

**Fig. 7.1**

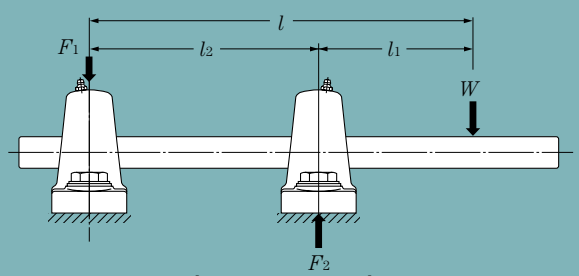


$$F_1 = \frac{l_1}{l_2} \cdot W \qquad F_2 = \frac{l}{l_2} \cdot W$$

**Fig. 7.2**

## 7.2 Dynamic equivalent radial load

For ball bearings used in the **NTN** unit, the basic rated dynamic loads $C_r$ mentioned in the table of dimensions are applicable only when the load is purely radial. In practice, however, bearings are usually subjected to a composite load. As the table of dimensions is not directly applicable here, it is necessary to convert the values of the radial and axial loads into a single radial load value that would have an effect on the life of bearing equivalent to that of the actual load applied. This is known as the "dynamic equivalent radial load", and from this the life of the ball bearings for the unit is the calculated. The dynamic equivalent radial load is calculated by the following formula:

$$P_r = X \cdot F_r + Y \cdot F_a \quad \cdots\cdots (7.6)$$

where,
$P_r$ : Dynamic equivalent radial load, N, lbf
$F_r$ : Actual radial load, N, lbf
$F_a$ : Actual axial load, N, lbf
$X$ : Radial load factor
$Y$ : Axial load factor

Values of $X$ and $Y$ are shown in Table 7.4 below.

**Table 7.4 Dynamic equivalent radial load**
$P_r = X \cdot F_r + Y \cdot F_a$

| $\frac{f_o \cdot F_a}{C_{or}}$ | $e$ | $\frac{F_a}{F_r} \leqq e$ | | $\frac{F_a}{F_r} > e$ | |
|---|---|---|---|---|---|
| | | $X$ | $Y$ | $X$ | $Y$ |
| 0.172 | 0.19 | | | | 2.30 |
| 0.345 | 0.22 | | | | 1.99 |
| 0.689 | 0.26 | | | | 1.71 |
| 1.03 | 0.28 | | | | 1.55 |
| 1.38 | 0.30 | 1 | 0 | 0.56 | 1.45 |
| 2.07 | 0.34 | | | | 1.31 |
| 3.45 | 0.38 | | | | 1.15 |
| 5.17 | 0.42 | | | | 1.04 |
| 6.89 | 0.44 | | | | 1.00 |

Note 1) The $f_o$ factor for calculating equivalent radial load has been added to the dimensional tables in the catalog.
2) $C_{or}$ is the basic static load rating. (See the table of dimensions.)
When the value of $\frac{f_o \cdot F_a}{C_{or}}$ or $\frac{F_a}{F_r}$ is not in conformity with those given in Table 7.4 above, find the value by interpolation.

## 7.3 Static equivalent radial load

In the case of a bearing which is stationary, rotates at a low speed of about 10 rpm, or makes slight oscillating movements, it is necessary to take into account the static equivalent radial load, which is the counterpart of the dynamic equivalent radial load of a rotating bearing. In this case, the following formula is used.

$$P_{or} = X_o \cdot F_r + Y_o \cdot F_a \quad \cdots\cdots (7.7)$$

where,
$P_{or}$: Static equivalent radial load, N, lbf
$F_r$ : Actual radial load, N, lbf
$F_a$ : Actual axial load, N, lbf
$X_o$ : Static radial load factor
$Y_o$ : Static axial load factor

With the ball bearings for the **NTN** unit, the values of $X_o$ and $Y_o$ are $X_o = 0.6$ $Y_o = 0.5$.
However when only radial load is involved, or when $F_a / F_r \leqq e$, the following values in used:

$$X_o = 1 \qquad Y_o = 0$$

Accordingly, the following equation holds.

$$P_{or} = F_r \quad \cdots\cdots (7.8)$$

# 8. Bearing Internal Clearance

## 8.1 Bearing internal clearance

Bearing internal clearance (initial clearance) is the amount of internal clearance a bearing has before being installed on a shaft or in a housing.

As shown in Fig. 8.1, when either the inner ring or the outer ring is fixed and the other ring is free to move, displacement can take place in either an axial or radial direction. This amount of displacement (radially or axially) is termed the internal clearance and, depending on the direction, is called the radial internal clearance or the axial internal clearance.

When the internal clearance of a bearing is measured, a slight measurement load is applied to the raceway so the internal clearance may be measured accurately. However, at this time, a slight amount of elastic deformation of the bearing occurs under the measurement load, and the clearance measurement value (measured clearance) is slightly larger than the true clearance. This discrepancy between the true bearing clearance and the increased amount due to the elastic deformation must be compensated for. These compensation values are given in Table 8.1.

The internal clearance values for each bearing class are shown in Tables 8.3.

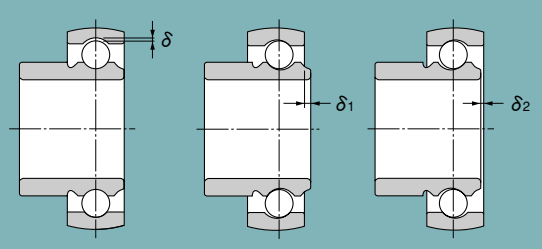


Radial clearance = $\delta$ Axial clearance = $\delta_1 + \delta_2$

**Fig.8.1 Internal clearance**

**Table 8.1 Adjustment of radial internal clearance based on measured load** Unit : μm

| Nominal bore diameter $d$ (mm) | | Measuring load (N) | Radial clearance increase | | | | |
|---|---|---|---|---|---|---|---|
| over | incl. | | C2 | CN | C3 | C4 | C5 |
| 10 | 18 | 24.5 | 3～4 | 4 | 4 | 4 | 4 |
| 18 | 50 | 49 | 4～5 | 5 | 6 | 6 | 6 |
| 50 | 200 | 147 | 6～8 | 8 | 9 | 9 | 9 |

## 8.2 Internal clearance selection

The internal clearance of a bearing under operating conditions (effective clearance) is usually smaller than the same bearing's initial clearance before being installed and operated. This is due to several factors including bearing fit, the difference in temperature between the inner and outer rings, etc. As a bearing's operating clearance has an effect on bearing life, heat generation, vibration, noise, etc.; care must be taken in selecting the most suitable operating clearance.

**Effective internal clearance:**

The internal clearance differential between the initial clearance and the operating (effective) clearance (the amount of clearance reduction caused by interference fits, or clearance variation due to the temperature difference between the inner and outer rings) can be calculated by the following formula:

$$\delta_{eff} = \delta_o - (\delta_f + \delta_t) \quad \cdots\cdots (8.1)$$

where,

$\delta_{eff}$: Effective internal clearance, mm

$\delta_o$: Bearing internal clearance, mm

$\delta_f$: Reduced amount of clearance due to interference, mm

$\delta_t$: Reduced amount of clearance due to temperature differential of inner and outer rings, mm

Reduced clearance due to interference:

When bearings are installed with interference fits on shafts and in housings, the inner ring will expand and the outer ring will contract; thus reducing the bearings' internal clearance. The amount of expansion or contraction varies depending on the shape of the bearing, the shape of the shaft or housing, dimensions of the respective parts, and the type of materials used. The differential can range from approximately 70% to 90% of the effective interference.

$$\delta_f = (0.70 \sim 0.90) \cdot \Delta_{deff} \quad \cdots\cdots (8.2)$$

where,

$\delta_f$: Reduced amount of clearance due to interference, mm

$\Delta_{deff}$: Effective interference, mm

Reduced internal clearance due to inner/outer ring temperature difference:

During operation, normally the outer ring will be from 5° to 10°C cooler than the inner ring or rotating parts. However, if the cooling effect of the housing is large, the shaft is connected to a heat source, or a heated substance is conducted through the hollow shaft; the temperature difference between the two rings can be even greater. The amount of internal clearance is thus further reduced by the differential expansion of the two rings.

$$\delta_t = \alpha \cdot \Delta_T \cdot D_o \quad \cdots\cdots (8.3)$$

where,

$\delta_t$ : Amount of reduced clearance due to heat differential, mm

$\alpha$ : Bearing steel linear expansion coefficient $12.5 \times 10^{-6}$/°C

$\Delta T$ : Inner/outer ring temperature differential, °C

$D_o$ : Outer ring raceway diameter, mm

Outer ring raceway diameter, $D_o$, values can be approximated by using formula 8.4.

For ball bearings,

$$D_o = 0.20\ (d + 4.0D) \quad \cdots\cdots (8.4)$$

where,

$d$ : Bearing bore diameter, mm

$D$ : Bearing outside diameter, mm

## 8.3 Bearing internal clearance selection standards

Theoretically, in regard to bearing life, the optimum operating internal clearance for any bearing would be a slight negative clearance after the bearing had reached normal operating temperature.

Unfortunately, under actual operating conditions, maintaining such optimum tolerances is often difficult at best. Due to various fluctuating operating conditions this slight minus clearance can quickly become a large minus, greatly lowering the life of the bearing and causing excessive heat to be generated. Therefore, an initial internal clearance which will result in a slightly greater than negative internal operating clearance should be selected.

Under normal operating conditions (e.g. normal load, fit, speed, temperature, etc.), a standard internal clearance will give a very satisfactory operating clearance.

Table 8.2 lists non-standard clearance recommendations for various applications and operating conditions.

**Table 8.2 Examples of applications where bearing clearances other than normal clearance are used**

| Operating conditions | Appilcations | Selected clearance |
|---|---|---|
| Shaft is heated and housing is cooled. | Conveyor of casting machine | C5 |
| Shaft or inner ring is heated. | Annealing pit, Drying pit, Curing pit | C4 |
| Allows for shaft deflection and fitting errors. | Disc harrows | C4 |
| | Combines | C3 |
| Tight-fitted for both inner and outer rings. | Large blowers | C3 |
| To reduce noise and vibration when rotating. | Multi-wing fan of air conditioners | C2 |

**Table 8.3 (1) Cylindrical bore bearings**

Unit: μm/0.0001 inch

| Nominal bore diameter d | | | | Radial internal clearance | | | | | | | | | | | | | | | | | | | |
|---|---|---|---|---|---|---|---|---|---|---|---|---|---|---|---|---|---|---|---|---|---|---|---|
| | | | | C2 | | | | CN | | | | C3 | | | | C4 | | | | C5 | | | |
| over | | incl. | | min. | | max. | | min. | | max. | | min. | | max. | | min. | | max. | | min. | | max. | |
| mm | inch | mm | inch | mm | inch | mm | inch | mm | inch | mm | inch | mm | inch | mm | inch | mm | inch | mm | inch | mm | inch | mm | inch |
| 6 | 0.2362 | 10 | 0.3937 | 0 | 0 | 7 | 3 | 2 | 0.8 | 13 | 5 | 8 | 3 | 23 | 9 | 14 | 6 | 29 | 11 | 20 | 8 | 37 | 15 |
| 10 | 0.3937 | 18 | 0.7087 | 0 | 0 | 9 | 4 | 3 | 1 | 18 | 7 | 11 | 4 | 25 | 10 | 18 | 7 | 33 | 13 | 25 | 10 | 45 | 18 |
| 18 | 0.7087 | 24 | 0.9449 | 0 | 0 | 10 | 4 | 5 | 2 | 20 | 8 | 13 | 5 | 28 | 11 | 20 | 8 | 36 | 14 | 28 | 11 | 48 | 19 |
| 24 | 0.9449 | 30 | 1.1811 | 1 | 0 | 11 | 4 | 5 | 2 | 20 | 8 | 13 | 5 | 28 | 11 | 23 | 9 | 41 | 16 | 30 | 12 | 53 | 21 |
| 30 | 1.1811 | 40 | 1.5748 | 1 | 0 | 11 | 4 | 6 | 2 | 20 | 8 | 15 | 6 | 33 | 13 | 28 | 11 | 46 | 18 | 40 | 16 | 64 | 25 |
| 40 | 1.5748 | 50 | 1.9685 | 1 | 0 | 11 | 4 | 6 | 2 | 23 | 9 | 18 | 7 | 36 | 14 | 30 | 12 | 51 | 20 | 45 | 18 | 73 | 29 |
| 50 | 1.9685 | 65 | 2.5591 | 1 | 0 | 15 | 6 | 8 | 3 | 28 | 11 | 23 | 9 | 43 | 17 | 38 | 15 | 61 | 24 | 55 | 22 | 90 | 35 |
| 65 | 2.5591 | 80 | 3.1496 | 1 | 0 | 15 | 6 | 10 | 4 | 30 | 12 | 25 | 10 | 51 | 20 | 46 | 18 | 71 | 28 | 65 | 26 | 105 | 41 |
| 80 | 3.1496 | 100 | 3.9370 | 1 | 0 | 18 | 7 | 12 | 5 | 36 | 14 | 30 | 12 | 58 | 23 | 53 | 21 | 84 | 33 | 75 | 30 | 120 | 47 |
| 100 | 3.9370 | 120 | 4.7244 | 2 | 1 | 20 | 8 | 15 | 6 | 41 | 16 | 36 | 14 | 66 | 26 | 61 | 24 | 97 | 38 | 90 | 35 | 140 | 55 |
| 120 | 4.7244 | 140 | 5.5118 | 2 | 1 | 23 | 9 | 18 | 7 | 48 | 19 | 41 | 16 | 81 | 32 | 71 | 28 | 114 | 45 | 105 | 41 | 160 | 63 |

Note :Heat-resistant bearings with suffix HT2 have C4 clearances.

**Table 8.3 (2) Tapered bore bearings**

Unit: μm/0.0001 inch

| Nominal bore diameter d | | | | Radial internal clearance | | | | | | | | | | | | | | | |
|---|---|---|---|---|---|---|---|---|---|---|---|---|---|---|---|---|---|---|---|
| | | | | C2 | | | | CN | | | | C3 | | | | C4 | | | |
| over | | incl. | | min. | | max. | | min. | | max. | | min. | | max. | | min. | | max. | |
| mm | inch | mm | inch | mm | inch | mm | inch | mm | inch | mm | inch | mm | inch | mm | inch | mm | inch | mm | inch |
| 24 | 0.9449 | 30 | 1.1811 | 5 | 2 | 20 | 8 | 13 | 5 | 28 | 11 | 23 | 9 | 41 | 16 | 30 | 12 | 53 | 21 |
| 30 | 1.1811 | 40 | 1.5748 | 6 | 2 | 20 | 8 | 15 | 6 | 33 | 13 | 28 | 11 | 46 | 18 | 40 | 16 | 54 | 25 |
| 40 | 1.5748 | 50 | 1.9685 | 6 | 2 | 23 | 9 | 18 | 7 | 36 | 14 | 30 | 12 | 51 | 20 | 45 | 18 | 73 | 29 |
| 50 | 1.9685 | 65 | 2.5591 | 8 | 3 | 28 | 11 | 23 | 9 | 43 | 17 | 38 | 15 | 61 | 24 | 55 | 22 | 90 | 35 |
| 65 | 2.5591 | 80 | 3.1496 | 10 | 4 | 30 | 12 | 25 | 10 | 51 | 20 | 46 | 18 | 71 | 28 | 65 | 26 | 105 | 41 |
| 80 | 3.1496 | 100 | 3.9370 | 12 | 5 | 36 | 14 | 30 | 12 | 58 | 23 | 53 | 21 | 84 | 33 | 75 | 30 | 120 | 47 |
| 100 | 3.9370 | 120 | 4.7244 | 15 | 6 | 41 | 16 | 36 | 14 | 66 | 26 | 61 | 24 | 97 | 38 | 90 | 35 | 140 | 55 |
| 120 | 4.7244 | 140 | 5.5118 | 18 | 7 | 48 | 19 | 41 | 16 | 81 | 32 | 71 | 28 | 114 | 45 | 105 | 41 | 160 | 63 |

Note :Heat-resistant bearings with suffix HT2 have C4 clearances.

# 9. Lubrication

As bearings in **NTN** bearing units have sufficient high-grade grease sealed in at the time of manufacture, there is no need for replenishment while in use. The amount of grease necessary for lubrication is, in general, very small. With the **NTN** bearing units, the amount of grease occupies about a half to a third of the space inside the bearing.

## 9.1 Allowable speed

The allowable speed while ensuring the safety and long life of ball bearings used in the unit is limited by their size, the circumferential speed at the point where the seal comes into contact, and the load acting on them.

To indicate the allowable speed , it is customary to use the value of $dn$ or $d_m n$ ($d$ is the bore of the bearing; $d_m$ is the diameter of the pitch circle= (I.D.+O.D.) /2; $n$ is the number of revolutions).

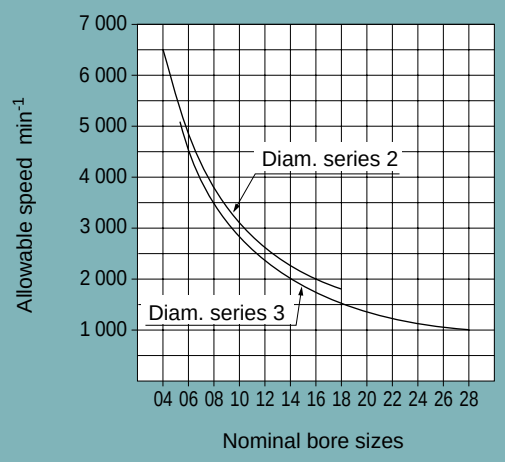


**Fig.9.1**

Problems connected with the lubrication of bearings are the generation of heat and seizures occurring at the sliding parts inside the bearing, in particular at the points where the ball is in contact with the retainer, inner and outer rings. The contact pressure at the points where friction occurs on the retainer is only slightly affected by the load acting on the bearing; the amount of heat generated there is approximately in proportion to the sliding velocity. Therefore, this sliding velocity serves as a yardstick to measure the limit of the rotating speed of the bearing. In the case of a bearing unit, however, there is another large factor that has to be taken into account– the circumferential speed at the part where the seal is in contact.

The graph in Fig. 9.1 indicates the allowable speed, taking into account the aforementioned factors.

There are two common methods of locking the bearing unit onto the shaft– the set screw system and the eccentric collar system. However, in both of these systems high-speed operation will cause deformation of the inner ring, which may result in vibration of the bearing. For high-speed operation, therefore, it is recommended that an interference fit or a clearance fit with a near-zero clearance be used, with a shaft of the larger size as shown later in this manual in Fig. 10.1, Fig. 10.5.

For standard bearing units with the contact type seal, the allowable speed is 120 000/$d$. Where a higher speed is required, bearing units with the non-contact type seal, are advised. Please contact **NTN** regarding the use of the latter type. Additionally, it is necessary that the surface on which the housing is mounted be finished to as a high a degree of accuracy as possible. A regularity of within ± 0.05mm, ± 0.002 inch is required.

**Table 9.1 Brands of grease used in NTN bearing units**

| Bearing units | Grease | | Symbols | Operating temperature range |
|---|---|---|---|---|
| | Thickening agent | Base oil | | |
| Standard | Li soap | Mineral oil | D1 | –15˚ to +100˚C, (+5˚ to +212˚F) |
| Heat-resistant | Li soap | Silicone oil | HT2D1 | Normal temp. to +180˚C (356˚F) |
| Cold-resistant | Li soap | Silicone oil | CT1D1 | –60˚C (-76˚F) to normal temp. |

## 9.2 Replenishment of grease

### 9.2.1 Sealed-in grease

With **NTN** bearing units, no relubrication is the general rule. The standard self-lubricating type of bearing units contain high-grade lithium-based grease which, being suitable for long-term use, is ideal for sealed-type bearings. They also feature **NTN**'s unique sealing device. Relubrication, therefore, is unnecessary under most operating conditions.

At high temperatures, or where there is exposure to water or excessive dust, the highest quality grease is essential. Therefore, **NTN** uses its own specially selected brands which are shown in Table 9.1. It is necessary to use the same brand when replenishing grease.

### 9.2.2 Mixing of different kinds of grease

Whether or not different kinds of grease may be mixed usually depends on their thickeners. The commonly used criteria are shown in Table 9.2. Properties which are most susceptible to influences from mixing are viscosity, dropping point and penetration. Water and heat resisting properties as well as mechanical stability are also lowered. Therefore, when mixing in a grease which is different to that which is already in use, it is essential that the thickener (soap base) and the base oil be of the same group.

When relubricating **NTN** bearing units, it is advisable to use the brands of grease shown in Table 9.1.

**Table 9.2 Mixing properties of grease**

| Soap base | Ca | Na | Al | Ba | Li |
|---|---|---|---|---|---|
| Ca | ○ | △ | △ | × | △ |
| Na | △ | ○ | △ | × | × |
| Al | △ | △ | ○ | × | × |
| Ba | × | × | × | ○ | × |
| Li | △ | × | × | × | ○ |

○ Mixing will not produce any appreciable change of properties.
△ Mixing may produce considerable variations of properties.
× Mixing will cause a drastic change of properties.

### 9.2.3 Relubrication frequency

Relubrication frequency varies with the kind and quality of grease used as well as the operating conditions. Therefore, it is difficult to establish a general rule, but under ordinary operating conditions, it is desirable that grease be replenished before one third (1/3) of its calculated life elapses. It is necessary, however, to take into consideration such factors as hardening of grease in the oil hole, making replenishment impossible; deterioration of grease while operation of the machine is suspended, and so forth.

In Table 9.3 below are shown standard relubrication frequencies. Irrespective of the calculated life of the grease, this list takes into consideration such factors as the rotational speed of the bearings, operating temperatures and environmental conditions, with a view to safety.

### 9.2.4 Re-greasing

The performance of a bearing is greatly influenced by the quantity of grease. In order to avoid over-filling, it is advisable to replenish the grease while the machine is in operation.

Continue to insert grease until a little oozes out from between the outer ring raceway and the periphery of the slinger, for optimum performance.

Relubrication quantity is shown Table 9.4

Relubrication pressure : 1 ～ 2MPa {10 ～ 20kgf/cm$^2$}

**Table 9.3 Standard relubrication frequencies**

| Type of unit | Symbol | $dn$ Value ($d \times n$) | Environmental conditions | Operating temp. ℃, °F | | | | Relubrication frequency | |
|---|---|---|---|---|---|---|---|---|---|
| | | | | | | | | Hours | Period |
| Standard | D1 | 40 000 and below | Ordinary | −15 to | −80, | +5 to | +176 | 1 500 to 3 000 | 6 to 12 mo. |
| Standard | D1 | 70 000 and below | Ordinary | −15 to | +80, | +5 to | +176 | 1 000 to 2 000 | 3 to 6 mo. |
| Standard | D1 | 70 000 and below | Ordinary | +80 to | +100, | +176 to | +212 | 500 to 700 | 1 mo. |
| Heat-resistant | HT2D1 | 70 000 and below | Ordinary | +100 to | +150, | +212 to | +302 | 300 to 700 | 1 mo. |
| Heat-resistant | HT2D1 | 70 000 and below | Ordinary | +150 to | +180, | +302 to | +356 | 100 | 1 wk. |
| Cold-resistant | CT1D1 | 70 000 and below | Ordinary | −60 to | +80, | −76 to | +176 | 1 000 to 2 000 | 3 to 6 mo. |
| Standard | D1 | 70 000 and below | Very dusty | −15 to | +100, | +5 to | +212 | 100 to 500 | 1 wk. to 1 mo. |
| Standard | D1 | 70 000 and below | Exposed to water splashes | −15 to | +100, | +5 to | +212 | 30 to 100 | 1 day to 1 wk. |

**Table 9.4 Relubrication quantity**

Unit gr

| Bearing number | | Quant. | Bearing number | Quant. |
|---|---|---|---|---|
| UC201D1 | | 1.1 | UC305D1 | 2.0 |
| UC202D1 | | 1.1 | UC306D1 | 3.0 |
| UC203D1 | | 1.1 | UC307D1 | 4.3 |
| UC204D1 | | 1.1 | UC308D1 | 5.5 |
| UC205D1 | | 1.3 | UC309D1 | 7.5 |
| UC206D1 | UCX05D1 | 1.9 | UC310D1 | 10.5 |
| UC207D1 | UCX06D1 | 2.7 | UC311D1 | 13 |
| UC208D1 | UCX07D1 | 3.5 | UC312D1 | 16.5 |
| UC209D1 | UCX08D1 | 4.1 | UC313D1 | 20 |
| UC210D1 | UCX09D1 | 4.6 | UC314D1 | 23.5 |
| UC211D1 | UCX10D1 | 6.0 | UC315D1 | 27.5 |
| UC212D1 | UCX11D1 | 8.5 | UC316D1 | 33 |
| UC213D1 | UCX12D1 | 10.5 | UC317D1 | 38 |
| UC214D1 | UCX13D1 | 12 | UC318D1 | 45 |
| UC215D1 | UCX14D1 | 13 | UC319D1 | 50 |
| UC216D1 | UCX15D1 | 15.5 | UC320D1 | 60 |
| UC217D1 | UCX16D1 | 16.5 | UC321D1 | 70 |
| UC218D1 | UCX17D1 | 21 | UC322D1 | 85 |
| | UCX18D1 | 22.5 | UC324D1 | 100 |
| | UCX20D1 | 35.5 | UC326D1 | 125 |
| | | | UC328D1 | 150 |

Note) Relubrication quantity of UK, UEL type is same as UC type.

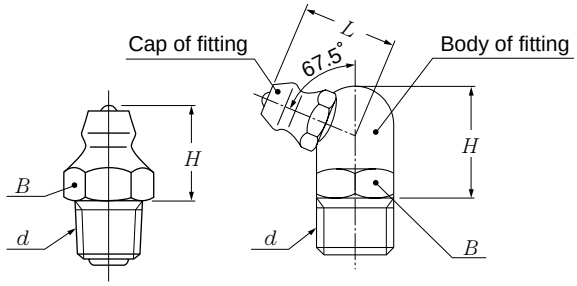


GA type GB type

## 9.3 Grease fitting

**NTN** bearing units are, as a general rule, provided with a grease fitting, as shown in Table 9.5, and a grease gun is used for regreasing. However, button-head and pin types may also be furnished on demand.

Grease fitting dimensions and the designation of applicable bearing units are given in Table 9.6.

**Table 9.5 Grease fitting types available for bearing units**

| Types of housing | **NTN** standard grease fitting types |
|---|---|
| Pillow type | GA type |
| Flange type | GA type |
| Take-up type | GB type |
| Hanger type | GA type |
| Cartridge type | GA type |

**Table 9.6 Grease fitting dimensions and designations of applicable bearing units**

GA type (Vertical type)

| **NTN** Designation | *d* | *H* mm | *H* inch | *B* mm | *B* inch |
|---|---|---|---|---|---|
| GA-¼-28 UNF | ¼-28 UNF | 8.5 | 0.335 | 7 | 0.276 |
| GA-PF⅛ | G⅛ | 12 | 0.472 | 10 | 0.394 |
| GA-PF¼ | G¼ | 14 | 0.551 | 14 | 0.551 |

GB type (67.5°)

| **NTN** Designation | *d* | *H* mm | *H* inch | *L* mm | *L* inch | *B* mm | *B* inch |
|---|---|---|---|---|---|---|---|
| GB-¼-28 UNF | ¼-28 UNF | 10.5 | 0.413 | 9.3 | 0.366 | 8 | 0.315 |
| GB-PF⅛ | G⅛ | 14.2 | 0.559 | 13.5 | 0.531 | 10 | 0.394 |
| GB-PF¼ | G¼ | 15 | 0.591 | 13.5 | 0.531 | 14 | 0.551 |

| Nominal screw size *d* | Series 2 | Series X | Series 3 |
|---|---|---|---|
| ¼-28 UNF | 203-209 | X05-X08 | 305-309 |
| G⅛ | 210-215 | X09-X14 | 310-315 |
| G¼ | 216-218 | X15-X20 | 316-328 |

Note:Screw size for the cartridge type is ¼ - 28 UNF.
That for C310D1 to C328D1 is G ⅛ (PF ⅛).

## 9.4 Standard location of the grease fitting

Standard location of grease fitting on the housing for the relubricatable bearing units of each type is illustrated below.

| | | | |
|---|---|---|---|
| 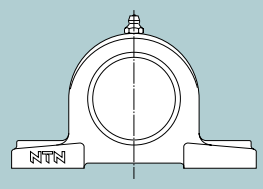 | 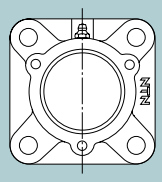 | 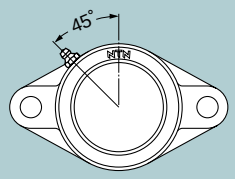 | ※ 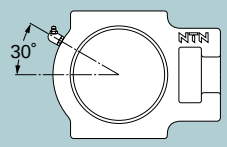 |
| P, PL, PX, S-P, type | C-F type | FL, FLU, FLX, S-FL type | T, TX, S-T type |
| 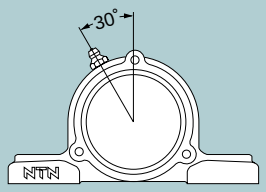 | 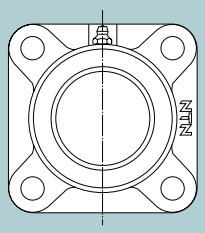 F, FU, S-F (#204, #205) | 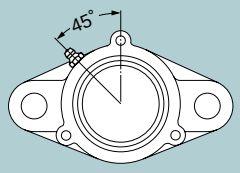 | ※ 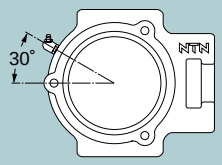 |
| C-P type | FS type | C-FL type | C-T type |
| 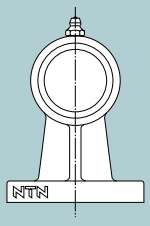 | 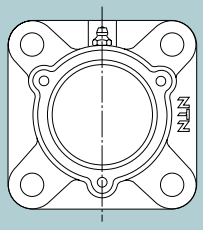 | 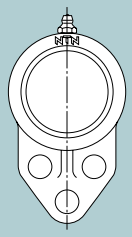 | 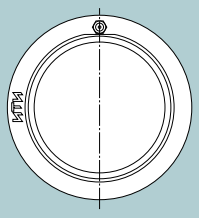 |
| HP type | C-FS type | FH type | C, CX type |
| 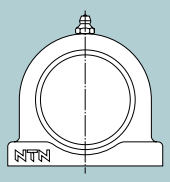 | 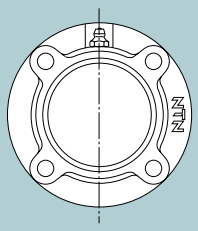 | 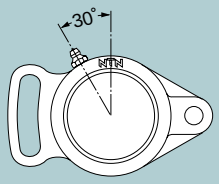 | ※ 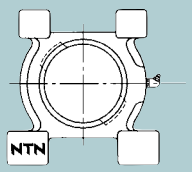 |
| UP type | FC, FCX, S-FC type | FA type | M, L, S-M, S-L type |
| 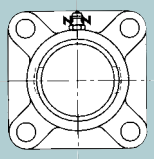 Except (#204, #205) | 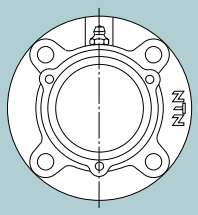 | 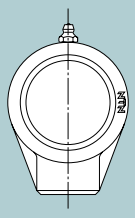 | ※ 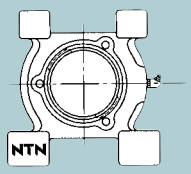 |
| F, FU, FX, S-F type | C-FC type | HB type | C-M, C-L type |

Note 1: Standard grease fitting type is GA. Item marked ※, however, have GB type as standard.
2: IPG, PE, PG, PM and PR type are categorized as P type.
3: FM, FE, FLG and FLR type are categorized as FL type.
4: FG and FSG type are categorized as FS type.
5: FCG type is categorized as FC type.
6: TG type is categorized as T type.

# 10. Shaft Designs

Although the shafts used for **NTN** bearing units require no particularly high standards of accuracy, it is desirable that, as far as possible, they be free from bends and flaws.

## 10.1 Set screw system bearing units

With set screw system bearing units, under normal operating conditions the inner ring is usually fitted onto the shaft by means of a clearance fit to ensure convenience of assembly. In this case the values shown in Fig. 10.1 are appropriate dimensional tolerances for the shaft.

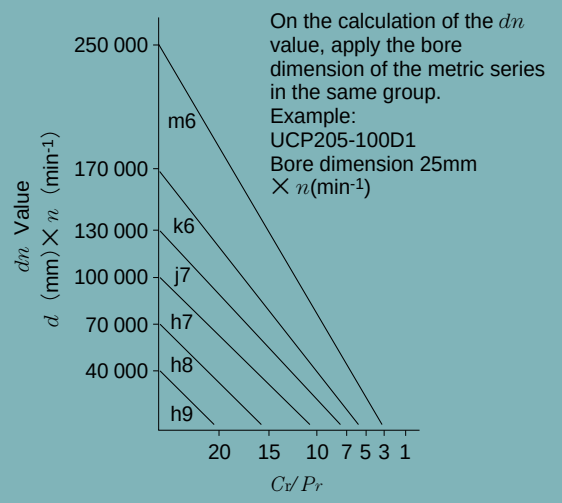


**Fig. 10.1 Dimensional tolerance for the shaft for set screw system bearing units**

### Step shafts

Wherever there is a noticeably large axial load, a step shaft, as shown in Fig. 10.2, should, if practical, be used.

For bearing units with covers, it is recommended that the units shown in Table 10.1 be used with shafts of the corresponding diameters, as shown in the same table.

The values of the radii of the rounded corners of these shafts are shown in Table 10.2.

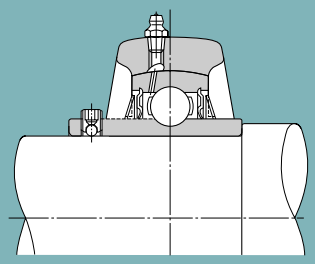

**Fig.10.2**

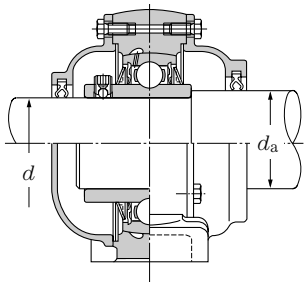


**Table 10.1 Bearing units with covers (for use with step shafts) and shaft diameters**

A) Metric series

| Designation of units | | $d_a$ mm |
|---|---|---|
| 10C-UCP206 to 10C-UCP218 | 10C-UCT208 to 10C-UCT217 | $d$+10 |
| 10C-UCP305 to 10C-UCP311 | 10C-UCT305 to 10C-UCT311 | $d$+10 |
| 15C-UCP312 to 15C-UCP324 | 15C-UCT312 to 15C-UCT324 | $d$+15 |
| 20C-UCP326 to 20C-UCP328 | 20C-UCT326 to 20C-UCT328 | $d$+20 |

Remarks : Designation of bearing units with blind covers.
Example : 10CM-UCP206D1

B) Inch series

| Designation of units | $d_a$ inch | Designation of units | $d_a$ inch |
|---|---|---|---|
| ZnC-···206-··· | 1½ | ZnC-···305-··· | 1⅜ |
| ZnC-···207-··· | 1¾ | ZnC-···306-··· | 1½ |
| ZnC-···208-··· | 1⅞ | ZnC-···307-··· | 1¾ |
| ZnC-···209-··· | 2 | ZnC-···308-··· | 1⅞ |
| ZnC-···210-··· | 2⅜ | ZnC-···309-··· | 2⅛ |
| ZnC-···211-··· | 2½ | ZnC-···310-··· | 2⅜ |
| ZnC-···212-··· | 2¾ | ZnC-···311-··· | 2¾ |
| ZnC-···213-··· | 3 | ZnC-···312-··· | 3 |
| ZnC-···214-··· | 3⅛ | ZnC-···313-··· | 3⅛ |
| ZnC-···215-··· | 3⅜ | ZnC-···314-··· | 3¼ |
| ZnC-···216-··· | 3½ | ZnC-···315-··· | 3½ |
| ZnC-···217-··· | 3¾ | ZnC-···316-··· | 3¾ |
| ZnC-···218-··· | 4 | ZnC-···317-··· | 4 |
| | | ZnC-···318-··· | 4 |

Note :Designations for all units differ from the normal numbering system.
Example 1 Pillow type : ZnC-UCP206-101D1
ZnCM-UCP206-101D1
Example 2 Flange type : ZnC-UCF206-101D1
ZnC-UCFL206-101D1
Example 3 Take-up type : ZnC-UCT206-101D1
ZnCM-UCT206-101D1
$n$ indicates serial number in designing from 1 onward.

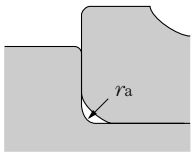


**Table 10.2 Radii of the round corners of step shafts**

| Designation of bearings | $r_{as}$ max. mm | inch | Designation of bearings | $r_{as}$ max. mm | inch |
|---|---|---|---|---|---|
| UC201 to UC203 | 0.6 | 0.024 | UC305 to UC306 | 1.5 | 0.059 |
| UC204 to UC206 | 1 | 0.039 | UC307 to UC309 | 2 | 0.079 |
| UC207 to UC210 | 1.5 | 0.059 | UC310 to UC311 | 2.5 | 0.098 |
| UC211 to UC215 | 2 | 0.079 | UC312 to UC316 | 2.5 | 0.098 |
| UC216 to UC218 | 2.5 | 0.098 | UC317 to UC324 | 3 | 0.118 |
| | | | UC326 to UC328 | 4 | 0.157 |

## Relief in the axial direction

Where several bearing units are fitted on the shaft, or where there is a great distance between two bearing units, one of the bearings is secured to the shaft as the "fixed-side bearing" and is subjected to both the axial and radial loads. The other is mounted on the shaft as the "free-side bearing" and is subjected only to radial load, compensating for expansion of the shaft due to a rise in temperature or for any errors in the distance between bearings that may have occurred during assembly.

If there is no free-side bearing, the bearings will be subjected to an abnormal axial load, which could cause premature breakdown.

Although it is desirable to use a cartridge-type bearing unit for the above purpose (Fig. 10.3), the following method is often employed. As illustrated in Fig. 10.4 (a) and (b), a key way is cut in the shaft, to accommodate a special set screw.

However, when the shaft speed is high, the dog point set screw may wear because of intensive vibration caused by the clearance between the bearing bore and the shaft. For this reason the dog point set screw is not suitable for blower type and similar applications. Please consult with **NTN** for alternatives.

When relief is provided in the axial direction by the use of screwed bolts as above, the dimensional relationships applicable are as shown in Tables 10.3 (a) and 10.3 (b) on the following pages.

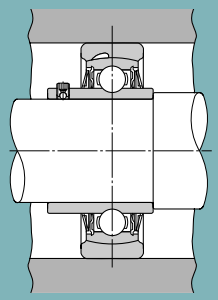

**Fig.10.3**

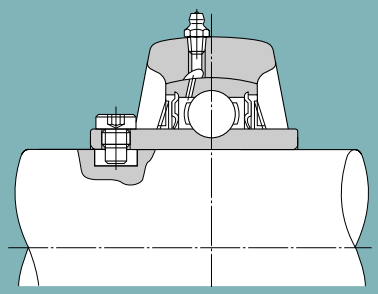

**Fig.10.4 (a)**

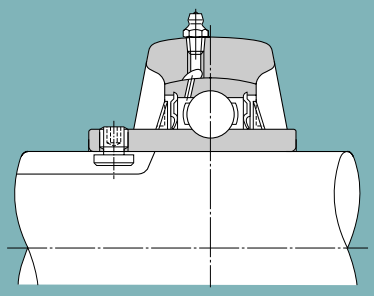

**Fig.10.4 (b)**

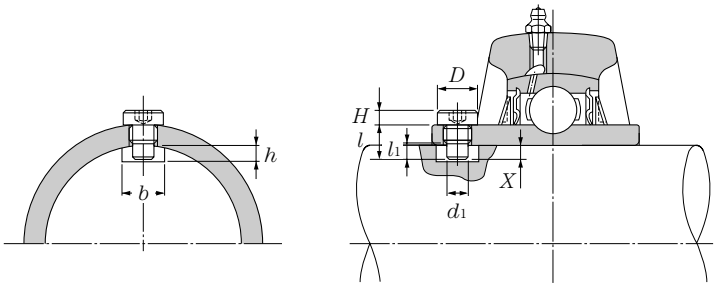


**Table 10.3 (a) Screwed bolt system**
A) Metric series, applied to metric bore size.

| Designation of bearings | Key way | | Designation and size of bolts | $d_1$ | $X$ | $l$ | $l_1$ | $D$ | $H$ |
|---|---|---|---|---|---|---|---|---|---|
| | Width $b$ mm | Depth $h$ mm | | mm | mm | mm | mm | mm | mm |
| UC201D1W5 | 3.5 | 3 | S5W5×0.8×11 | 3.5 | 2.2 | 11 | 5 | 6 | 3 |
| UC202D1W5 | 3.5 | 4.5 | S5W5×0.8×11 | 3.5 | 3.7 | 11 | 5 | 6 | 3 |
| UC203D1W5 | 3.5 | 5.5 | S5W5×0.8×11 | 3.5 | 4.7 | 11 | 5 | 6 | 3 |
| UC204D1W5 | 3.5 | 4.5 | S5W5×0.8×8.5 | 3.5 | 3.7 | 8.5 | 5 | 6 | 3 |
| UC205D1W5 | 3.5 | 5 | S5W5×0.8×8.5 | 3.5 | 4 | 8.5 | 5 | 6 | 3 |
| UC206D1W5 | 4 | 5.5 | S5W6×0.75×10 | 4 | 4.6 | 10 | 5.9 | 8 | 3 |
| UC207D1W5 | 4 | 5 | S5W6×0.75×10 | 4 | 4.1 | 10 | 5.9 | 8 | 3 |
| UC208D1W5 | 6 | 5.5 | S5W8×1×11.5 | 6 | 5 | 11.5 | 5.5 | 10 | 3 |
| UC209D1W5 | 6 | 6 | S5W8×1×11.5 | 6 | 5.2 | 11.5 | 5.5 | 10 | 3 |
| UC210D1W5 | 6 | 6 | S5W8×1×11.5 | 6 | 5.3 | 11.5 | 5.5 | 10 | 3 |
| UC211D1W5 | 6 | 5.5 | S5W8×1×11.5 | 6 | 4.5 | 11.5 | 5.5 | 10 | 3 |
| UC212D1W5 | 7 | 5.5 | S5W10×1.25×13.5 | 7 | 5 | 13.5 | 6.5 | 12 | 3 |
| UC213D1W5 | 7 | 5.5 | S5W10×1.25×13.5 | 7 | 4.8 | 13.5 | 6.5 | 12 | 3 |
| UC214D1W5 | 7 | 5.5 | S5W10×1.25×13.5 | 7 | 5 | 13.5 | 6.5 | 12 | 3 |
| UC215D1W5 | 7 | 5 | S5W10×1.25×13.5 | 7 | 4.5 | 13.5 | 6.5 | 12 | 3 |
| UC216D1W5 | 7 | 6.5 | S5W10×1.25×15 | 7 | 6 | 15 | 7 | 12 | 3 |
| UC217D1W5 | 9 | 6.5 | S5W12×1.5×16.5 | 9 | 5.8 | 16.5 | 7 | 14 | 4 |
| UC218D1W5 | 9 | 6.5 | S5W12×1.5×16.5 | 9 | 5.7 | 16.5 | 7 | 14 | 4 |
| UC305D1W5 | 4 | 6.5 | S5W6×0.75×11.5 | 4 | 5.6 | 11.5 | 6 | 8 | 3 |
| UC306D1W5 | 4 | 5 | S5W6×0.75×11.5 | 4 | 4.1 | 11.5 | 6 | 8 | 3 |
| UC307D1W5 | 6 | 5 | S5W8×1×11.5 | 6 | 4.3 | 11.5 | 5.5 | 10 | 3 |
| UC308D1W5 | 7 | 6 | S5W10×1.25×13.5 | 7 | 5.5 | 13.5 | 6.5 | 12 | 3 |
| UC309D1W5 | 7 | 6.5 | S5W10×1.25×15 | 7 | 5.8 | 15 | 7 | 12 | 3 |
| UC310D1W5 | 9 | 7 | S5W12×1.5×16.5 | 9 | 6.2 | 16.5 | 7 | 14 | 4 |
| UC311D1W5 | 9 | 6.5 | S5W12×1.5×16.5 | 9 | 5.7 | 16.5 | 7 | 14 | 4 |
| UC312D1W5 | 9 | 6 | S5W12×1.5×16.5 | 9 | 5.2 | 16.5 | 7 | 14 | 4 |
| UC313D1W5 | 9 | 7 | S5W12×1.5×18 | 9 | 6.4 | 18 | 7.5 | 14 | 4 |
| UC314D1W5 | 9 | 6.5 | S5W12×1.5×18 | 9 | 5.6 | 18 | 7.5 | 14 | 4 |
| UC315D1W5 | 10 | 7.5 | S5W14×1.5×20 | 10 | 6.9 | 20 | 8.5 | 17 | 5 |
| UC316D1W5 | 10 | 7 | S5W14×1.5×20 | 10 | 6.1 | 20 | 8.5 | 17 | 5 |
| UC317D1W5 | 12 | 9 | S5W16×1.5×23 | 12 | 8.3 | 23 | 9 | 19 | 6 |
| UC318D1W5 | 12 | 8.5 | S5W16×1.5×23 | 12 | 7.6 | 23 | 9 | 19 | 6 |
| UC319D1W5 | 12 | 7.5 | S5W16×1.5×23 | 12 | 6.8 | 23 | 9 | 19 | 6 |
| UC320D1W5 | 14 | 8 | S5W18×1.5×25 | 14 | 7.2 | 25 | 9.5 | 22 | 7 |
| UC321D1W5 | 14 | 7 | S5W18×1.5×25 | 14 | 6.4 | 25 | 9.5 | 22 | 7 |
| UC322D1W5 | 14 | 9 | S5W18×1.5×29 | 14 | 8.2 | 29 | 10 | 22 | 7 |
| UC324D1W5 | 14 | 7 | S5W18×1.5×29 | 14 | 6.4 | 29 | 10 | 22 | 7 |
| UC326D1W5 | 16 | 9.5 | S5W20×1.5×33 | 16 | 8.9 | 33 | 11 | 24 | 7 |
| UC328D1W5 | 16 | 8.5 | S5W20×1.5×33 | 16 | 7.8 | 33 | 11 | 24 | 7 |

Remarks: The tolerance for the width ($b$) of the key way should preferably be set at the range of 0 to +0.2 mm.

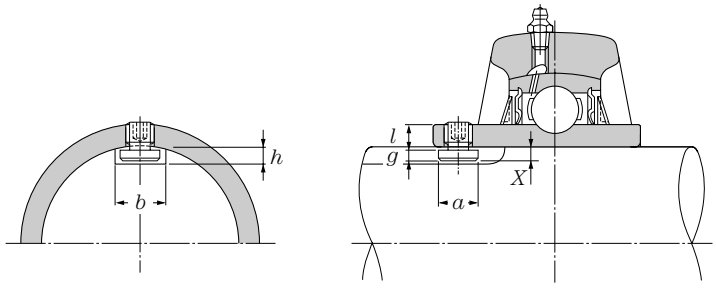


**Table 10.3 (b) Key bolt system**
A) Metric series, applied to metric bore size.

| Designation of bearings | Key way | | Designation and size of bolts | $a$ | $X$ | $g$ | $l$ |
|---|---|---|---|---|---|---|---|
| | Width $b$ mm | Depth $h$ mm | | mm | mm | mm | mm |
| UC201D1W6 | 6 | 4.5 | S6W5×0.8×5-1 | 5.9 | 3.8 | 3 | 6 |
| UC202D1W6 | 6 | 4.5 | S6W5×0.8×5-1 | 5.9 | 3.6 | 3 | 6 |
| UC203D1W6 | 6 | 4 | S6W5×0.8×5-1 | 5.9 | 3.5 | 3 | 6 |
| UC204D1W6 | 7 | 4.5 | S6W5×0.8×5 | 6.9 | 3.8 | 3.2 | 6 |
| UC205D1W6 | 7 | 4.5 | S6W5×0.8×5 | 6.9 | 3.7 | 3.2 | 6 |
| UC206D1W6 | 8 | 4.5 | S6W6×0.75×6 | 7.9 | 3.7 | 3.2 | 7 |
| UC207D1W6 | 8 | 4.5 | S6W6×0.75×6 | 7.9 | 3.7 | 3.2 | 7 |
| UC208D1W6 | 10 | 5 | S6W8×1×7 | 9.9 | 4.2 | 3.6 | 8 |
| UC209D1W6 | 10 | 5 | S6W8×1×7 | 9.9 | 4.2 | 3.6 | 8 |
| UC210D1W6 | 10 | 5 | S6W8×1×7 | 9.9 | 4.1 | 3.6 | 8 |
| UC211D1W6 | 10 | 5 | S6W8×1×7 | 9.9 | 4 | 3.6 | 8 |
| UC212D1W6 | 12 | 5.5 | S6W10×1.25×9 | 11.9 | 4.6 | 4 | 10 |
| UC213D1W6 | 12 | 5.5 | S6W10×1.25×9 | 11.9 | 4.5 | 4 | 10 |
| UC214D1W6 | 12 | 5.5 | S6W10×1.25×9 | 11.9 | 4.5 | 4 | 10 |
| UC215D1W6 | 12 | 5.5 | S6W10×1.25×9 | 11.9 | 4.5 | 4 | 10 |
| UC216D1W6 | 12 | 5.5 | S6W10×1.25×9 | 11.9 | 4.4 | 4 | 10 |
| UC217D1W6 | 14 | 6 | S6W12×1.5×11 | 13.9 | 5.4 | 4.8 | 12 |
| UC218D1W6 | 14 | 6 | S6W12×1.5×11 | 13.9 | 5.3 | 4.8 | 12 |
| UC305D1W6 | 8 | 4.5 | S6W6×0.75×6 | 7.9 | 3.9 | 3.2 | 7 |
| UC306D1W6 | 8 | 4.5 | S6W6×0.75×6 | 7.9 | 3.7 | 3.2 | 7 |
| UC307D1W6 | 10 | 5 | S6W8×1×7 | 9.9 | 4.3 | 3.6 | 8 |
| UC308D1W6 | 12 | 5.5 | S6W10×1.25×9 | 11.9 | 4.9 | 4 | 10 |
| UC309D1W6 | 12 | 5.5 | S6W10×1.25×9 | 11.9 | 4.8 | 4 | 10 |
| UC310D1W6 | 14 | 6.5 | S6W12×1.5×11 | 13.9 | 5.8 | 4.8 | 12 |
| UC311D1W6 | 14 | 6.5 | S6W12×1.5×11 | 13.9 | 5.7 | 4.8 | 12 |
| UC312D1W6 | 14 | 6.5 | S6W12×1.5×11 | 13.9 | 5.6 | 4.8 | 12 |
| UC313D1W6 | 14 | 6.5 | S6W12×1.5×11 | 13.9 | 5.6 | 4.8 | 12 |
| UC314D1W6 | 14 | 6.5 | S6W12×1.5×11 | 13.9 | 5.5 | 4.8 | 12 |
| UC315D1W6 | 16 | 7.5 | S6W14×1.5×13 | 15.9 | 6.7 | 5.8 | 14 |
| UC316D1W6 | 16 | 7.5 | S6W14×1.5×13 | 15.9 | 6.6 | 5.8 | 14 |
| UC317D1W6 | 18 | 8.5 | S6W16×1.5×16 | 17.9 | 7.5 | 6.5 | 17 |
| UC318D1W6 | 18 | 8.5 | S6W16×1.5×16 | 17.9 | 7.4 | 6.5 | 17 |
| UC319D1W6 | 18 | 8.5 | S6W16×1.5×16 | 17.9 | 7.4 | 6.5 | 17 |
| UC320D1W6 | 20 | 10.5 | S6W18×1.5×18 | 19.9 | 9.5 | 8.5 | 19 |
| UC321D1W6 | 20 | 10.5 | S6W18×1.5×18 | 19.9 | 9.5 | 8.5 | 19 |
| UC322D1W6 | 20 | 10.5 | S6W18×1.5×18 | 19.9 | 9.4 | 8.5 | 19 |
| UC324D1W6 | 20 | 10.5 | S6W18×1.5×18 | 19.9 | 9.4 | 8.5 | 19 |
| UC326D1W6 | 22 | 11 | S6W20×1.5×25 | 21.9 | 10.4 | 9.5 | 26 |
| UC328D1W6 | 22 | 11 | S6W20×1.5×25 | 21.9 | 10.4 | 9.5 | 26 |

Note: The tolerance for the width ($b$) of the key way should preferably be set at the range of 0 to +0.2 mm.

## 10.2 Eccentric collar system

As in the case of the set screw system, it is usual under normal operating conditions to fit the inner ring onto the shaft by means of a clearance fit, for ease of assembly. Fig. 10.5 shows the appropriate values of dimensional tolerances for the shaft.

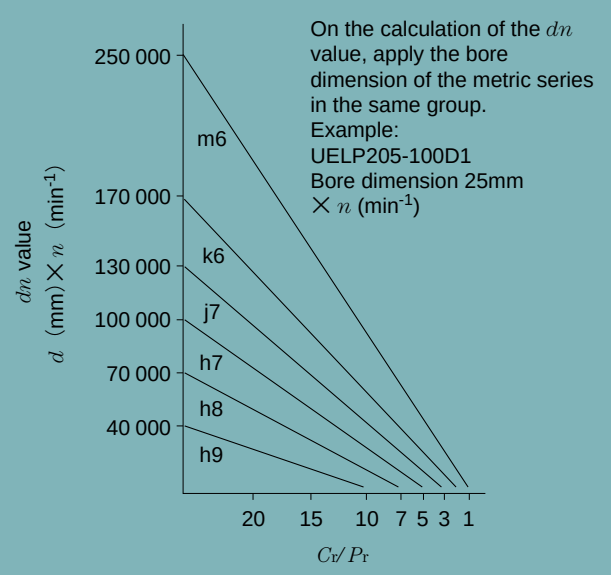


**Fig 10.5 Dimensional tolerances for the shaft eccentric collar system bearing units**

## 10.3 Adapter system bearing units

Since in the case of the adapter system, the bearing unit is fastened onto the shaft by means of a sleeve, for dimensional tolerances for the shaft, h9 is applicable under all operating conditions.

Note that it is not usable under a loose fit ≧ h9.

# 11. Handling of the Bearing Unit

## 11.1 Mounting of the housing

### 11.1.1 Pillow block type and flange type

Although an advantage of the **NTN** bearing unit is that it can be fitted easily and will function efficiently on any part of a machine, attention must be paid to the following points in order to ensure its normal service life.

1) The surface on which the housing is mounted must be sufficiently rigid.
2) The surface on which the housing is mounted should be as flat as possible (The housing should set firmly in its position). Deformation of the housing caused by incorrect mounting will in turn cause deformation of the bearing, leading to its premature breakdown.

Fig. 11.1

3) It is desirable that the angle between the surface on which the housing is mounted and the shaft be maintained to a tolerance of ± 2˚.

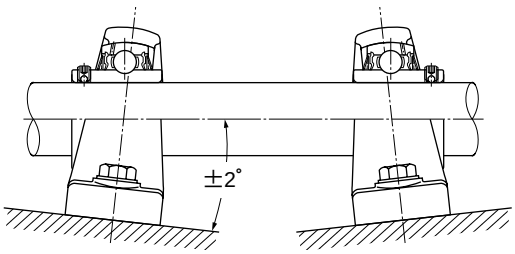


Fig. 11.2

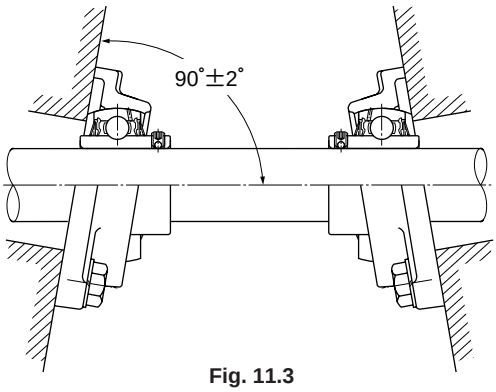


Fig. 11.3

4) Excessive tightening of the mounting bolts may cause the housing to deform. Tightening the bolts to the proper torque can avoid this issue. Also, **NTN** recommends using a washer with the bolt when mounting the housing as the bolt alone may cause damage to the housing.

**Table 11.1 Recommended torques for tightening hexagon head bolt**

**Except Resin Housing**

| Bolt size | Tightening torques | | Bolt size | Tightening torques | |
|---|---|---|---|---|---|
| | N·m | lbf·inch | | N·m | lbf·inch |
| M6 | 5.4 | 48 | M24 | 392 | 3 472 |
| M8 | 13.8 | 122 | M27 | 588 | 5 208 |
| M10 | 27.5 | 243 | M30 | 784 | 6 944 |
| M12 | 47.1 | 417 | M33 | 1 078 | 9 548 |
| M14 | 76.5 | 677 | M36 | 1 372 | 12 151 |
| M16 | 118 | 1 042 | M39 | 1 764 | 15 623 |
| M18 | 162 | 1 432 | M42 | 2 156 | 19 095 |
| M20 | 226 | 1 996 | M45 | 2 744 | 24 303 |
| M22 | 314 | 2 777 | | | |

**Resin Housing**

| Housing No. | Bolt size | Tightening torques | | Housing No. | Bolt size | Tightening torques | |
|---|---|---|---|---|---|---|---|
| | | N·m | lbf·inch | | | N·m | lbf·inch |
| PR204D1 | M10 | 17.7 | 156 | FLR204D1 | M10 | 17.7 | 156 |
| PR205D1 | M10 | 24.5 | 217 | FLR205D1 | M10 | 24.5 | 217 |
| PR206D1 | M12 | 29.4 | 260 | FLR206D1 | M10 | 29.4 | 260 |
| PR207D1 | M12 | 35.3 | 312 | FLR207D1 | M12 | 35.3 | 312 |
| PR208D1 | M12 | 45.1 | 399 | FLR208D1 | M12 | 40.2 | 356 |

5) The pillow block type and flange type housings are provided with a seat for a dowel for accurate location. For the use of dowel pins, refer to Table 11.2.

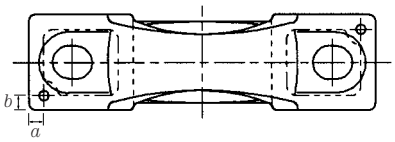


P, C-P

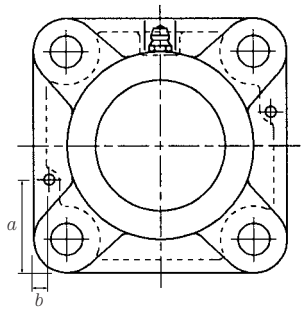


F

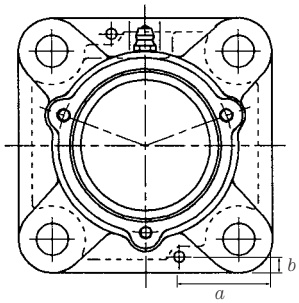


C-F

**Table 11.2 Recommended dimensions of dowel pins**

| Designation of the housings | | $a$ | | $b$ | | Recommended pin diameter | |
|---|---|---|---|---|---|---|---|
| | | mm | inch | mm | inch | mm | inch |
| P203 | — | 5.5 | 0.216 | 5.5 | 0.216 | 3 | 0.118 |
| P204 | C-P204 | 5.5 | 0.216 | 5.5 | 0.216 | 3 | 0.118 |
| P205 | C-P205 | 5.5 | 0.216 | 5.5 | 0.216 | 3 | 0.118 |
| P206 | C-P206 | 5.5 | 0.216 | 5.5 | 0.216 | 3 | 0.118 |
| P207 | C-P207 | 5.5 | 0.216 | 5.5 | 0.216 | 3 | 0.118 |
| P208 | C-P208 | 7 | 0.276 | 7 | 0.276 | 5 | 0.197 |
| P209 | C-P209 | 7 | 0.276 | 7 | 0.276 | 5 | 0.197 |
| P210 | C-P210 | 7.5 | 0.295 | 7.5 | 0.295 | 5 | 0.197 |
| P211 | C-P211 | 7.5 | 0.295 | 7.5 | 0.295 | 5 | 0.197 |
| P212 | C-P212 | 9 | 0.354 | 9 | 0.354 | 7 | 0.276 |
| P213 | C-P213 | 9 | 0.354 | 9 | 0.354 | 7 | 0.276 |
| P214 | C-P214 | 9 | 0.354 | 9 | 0.354 | 7 | 0.276 |
| P215 | C-P215 | 9 | 0.354 | 9 | 0.354 | 7 | 0.276 |
| P216 | C-P216 | 10 | 0.394 | 10 | 0.394 | 7 | 0.276 |
| P217 | C-P217 | 12 | 0.472 | 12 | 0.472 | 10 | 0.394 |
| P218 | C-P218 | 12 | 0.472 | 12 | 0.472 | 10 | 0.394 |
| P305 | C-P305 | 8 | 0.315 | 8 | 0.315 | 4 | 0.157 |
| P306 | C-P306 | 8 | 0.315 | 8 | 0.315 | 4 | 0.157 |
| P307 | C-P307 | 10 | 0.394 | 10 | 0.394 | 5 | 0.197 |
| P308 | C-P308 | 10 | 0.394 | 10 | 0.394 | 5 | 0.197 |
| P309 | C-P309 | 10 | 0.394 | 10 | 0.394 | 5 | 0.197 |
| P310 | C-P310 | 12 | 0.472 | 12 | 0.472 | 6 | 0.236 |
| P311 | C-P311 | 12 | 0.472 | 12 | 0.472 | 6 | 0.236 |
| P312 | C-P312 | 14 | 0.551 | 14 | 0.551 | 6 | 0.236 |
| P313 | C-P313 | 14 | 0.551 | 14 | 0.551 | 6 | 0.236 |
| P314 | C-P314 | 14 | 0.551 | 14 | 0.551 | 6 | 0.236 |
| P315 | C-P315 | 17 | 0.669 | 17 | 0.669 | 8 | 0.315 |
| P316 | C-P316 | 17 | 0.669 | 17 | 0.669 | 8 | 0.315 |
| P317 | C-P317 | 17 | 0.669 | 17 | 0.669 | 8 | 0.315 |
| P318 | C-P318 | 17 | 0.669 | 17 | 0.669 | 8 | 0.315 |
| P319 | C-P319 | 17 | 0.669 | 17 | 0.669 | 8 | 0.315 |
| P320 | C-P320 | 17 | 0.669 | 17 | 0.669 | 8 | 0.315 |
| P321 | C-P321 | 17 | 0.669 | 17 | 0.669 | 8 | 0.315 |
| P322 | C-P322 | 19 | 0.748 | 19 | 0.748 | 10 | 0.394 |
| P324 | C-P324 | 19 | 0.748 | 19 | 0.748 | 10 | 0.394 |
| P326 | C-P326 | 23 | 0.906 | 23 | 0.906 | 12 | 0.472 |
| P328 | C-P328 | 23 | 0.906 | 23 | 0.906 | 12 | 0.472 |

| Designation of the housings | | $a$ | | $b$ | | Recommended pin diameter | |
|---|---|---|---|---|---|---|---|
| | | mm | inch | mm | inch | mm | inch |
| F204 | C-F204 | 33 | 1.229 | 6 | 0.236 | 4 | 0.157 |
| F205 | C-F205 | 35 | 1.378 | 6 | 0.236 | 4 | 0.157 |
| F206 | C-F206 | 35 | 1.378 | 6 | 0.236 | 4 | 0.157 |
| F207 | C-F207 | 38 | 1.496 | 7 | 0.276 | 5 | 0.197 |
| F208 | C-F208 | 40 | 1.575 | 8 | 0.315 | 5 | 0.197 |
| F209 | C-F209 | 43 | 1.693 | 8 | 0.315 | 5 | 0.197 |
| F210 | C-F210 | 49 | 1.929 | 8 | 0.315 | 5 | 0.197 |
| F211 | C-F211 | 49 | 1.929 | 8 | 0.315 | 5 | 0.197 |
| F212 | C-F212 | 49 | 1.929 | 8 | 0.315 | 5 | 0.197 |
| F213 | C-F213 | 52 | 2.047 | 9 | 0.354 | 6 | 0.236 |
| F214 | C-F214 | 52 | 2.047 | 9 | 0.354 | 6 | 0.236 |
| F215 | C-F215 | 52 | 2.047 | 9 | 0.354 | 6 | 0.236 |
| F216 | C-F216 | 55 | 2.165 | 12 | 0.472 | 6 | 0.236 |
| F217 | C-F217 | 55 | 2.165 | 12 | 0.472 | 6 | 0.236 |
| F218 | C-F218 | 61 | 2.402 | 14 | 0.551 | 6 | 0.236 |
| F305 | C-F305 | 35 | 1.378 | 6 | 0.236 | 4 | 0.157 |
| F306 | C-F306 | 40 | 1.575 | 6 | 0.236 | 4 | 0.157 |
| F307 | C-F307 | 47 | 1.805 | 8 | 0.315 | 5 | 0.197 |
| F308 | C-F308 | 48 | 1.890 | 8 | 0.315 | 5 | 0.197 |
| F309 | C-F309 | 48 | 1.890 | 8 | 0.315 | 5 | 0.197 |
| F310 | C-F310 | 48 | 1.890 | 8 | 0.315 | 5 | 0.197 |
| F311 | C-F311 | 51 | 2.008 | 10 | 0.394 | 5 | 0.197 |
| F312 | C-F312 | 51 | 2.008 | 10 | 0.394 | 5 | 0.197 |
| F313 | C-F313 | 57 | 2.244 | 10 | 0.394 | 6 | 0.236 |
| F314 | C-F314 | 61 | 2.402 | 10 | 0.394 | 6 | 0.236 |
| F315 | C-F315 | 65 | 2.559 | 8.5 | 0.335 | 6 | 0.236 |
| F316 | C-F316 | 65 | 2.559 | 8.5 | 0.335 | 6 | 0.236 |
| F317 | C-F317 | 70 | 2.756 | 9 | 0.354 | 6 | 0.236 |
| F318 | C-F318 | 80 | 3.150 | 10 | 0.394 | 8 | 0.315 |
| F319 | C-F319 | 80 | 3.150 | 10 | 0.394 | 8 | 0.315 |
| F320 | C-F320 | 80 | 3.150 | 10 | 0.394 | 8 | 0.315 |
| F321 | C-F321 | 80 | 3.150 | 10 | 0.394 | 8 | 0.315 |
| F322 | C-F322 | 90 | 3.543 | 10 | 0.394 | 8 | 0.315 |
| F324 | C-F324 | 90 | 3.543 | 13 | 0.512 | 10 | 0.394 |
| F326 | C-F326 | 100 | 3.937 | 13 | 0.512 | 10 | 0.394 |
| F328 | C-F328 | 108 | 4.252 | 13 | 0.512 | 10 | 0.394 |

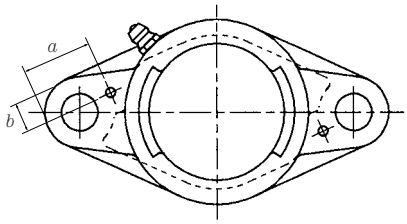


FL

| Designation of the housings | a | | b | | Recommended pin diameter | |
|---|---|---|---|---|---|---|
| | mm | inch | mm | inch | mm | inch |
| FL204 | 22 | 0.866 | 10 | 0.394 | 4 | 0.157 |
| FL205 | 32 | 1.260 | 10 | 0.394 | 4 | 0.157 |
| FL206 | 33 | 1.299 | 12 | 0.472 | 4 | 0.157 |
| FL207 | 30 | 1.181 | 14 | 0.551 | 5 | 0.197 |
| FL208 | 33 | 1.299 | 15 | 0.591 | 5 | 0.197 |
| FL209 | 38 | 1.496 | 15 | 0.591 | 5 | 0.197 |
| FL210 | 39 | 1.535 | 16 | 0.630 | 5 | 0.197 |
| FL211 | 44 | 1.732 | 18 | 0.709 | 5 | 0.197 |
| FL212 | 54 | 2.126 | 19 | 0.748 | 5 | 0.197 |
| FL213 | 53 | 2.087 | 18 | 0.709 | 6 | 0.236 |
| FL214 | 53 | 2.087 | 18 | 0.709 | 6 | 0.236 |
| FL215 | 55 | 2.165 | 21 | 0.827 | 6 | 0.236 |
| FL216 | 55 | 2.165 | 21 | 0.827 | 6 | 0.236 |
| FL217 | 55 | 2.165 | 21 | 0.827 | 6 | 0.236 |
| FL218 | 55 | 2.165 | 22 | 0.866 | 6 | 0.236 |
| FL305 | 35 | 1.378 | 9 | 0.354 | 4 | 0.157 |
| FL306 | 44 | 1.732 | 11 | 0.433 | 4 | 0.157 |
| FL307 | 43 | 1.693 | 13 | 0.512 | 5 | 0.197 |
| FL308 | 45 | 1.772 | 15 | 0.591 | 5 | 0.197 |
| FL309 | 51 | 2.008 | 18 | 0.709 | 5 | 0.197 |
| FL310 | 55 | 2.165 | 15 | 0.591 | 5 | 0.197 |
| FL311 | 55 | 2.165 | 15 | 0.591 | 5 | 0.197 |
| FL312 | 60 | 2.363 | 18 | 0.709 | 5 | 0.197 |
| FL313 | 59 | 2.323 | 24 | 0.945 | 6 | 0.236 |
| FL314 | 63 | 2.480 | 24 | 0.945 | 6 | 0.236 |
| FL315 | 66 | 2.598 | 23 | 0.906 | 6 | 0.236 |
| FL316 | 72 | 2.835 | 27 | 1.063 | 6 | 0.236 |
| FL317 | 74 | 2.913 | 29 | 1.142 | 6 | 0.236 |
| FL318 | 74 | 2.913 | 29 | 1.142 | 8 | 0.315 |
| FL319 | 80 | 3.150 | 30 | 1.181 | 8 | 0.315 |
| FL320 | 84 | 3.307 | 30 | 1.181 | 8 | 0.315 |
| FL321 | 84 | 3.307 | 30 | 1.181 | 8 | 0.315 |
| FL322 | 84 | 3.307 | 36 | 1.417 | 8 | 0.315 |
| FL324 | 93 | 3.661 | 38 | 1.496 | 10 | 0.394 |
| FL326 | 94 | 3.701 | 39 | 1.535 | 10 | 0.394 |
| FL328 | 102 | 4.016 | 40 | 1.575 | 10 | 0.394 |

### 11.1.2 Cartridge type

The inside diameter of the housing into which a cartridge type unit is inserted should be H7 under general operating conditions. It should be so furnished as to permit the bearing unit to move freely in the axial direction.

## 11.2 Mounting the bearing unit on the shaft

### 11.2.1 Mounting of the set screw system unit

To mount the set screw system bearing unit on the shaft, it is sufficient to tighten the two set screws uniformly.

The construction of the **NTN** "Ball-End Set Screw" is illustrated in Fig. 11.4 with the pin design that prevents it from becoming loose even when it is subjected to vibrations or impact loads.

If the fit clearance between the inner ring and the shaft is very small, it is advisable, prior to fastening on the screw, to file off that part of the shaft at which the end of the set screw (ball) strikes, by approximately 0.2 to 0.5mm 0.01 to 0.02 inches, to flatten it , as illustrated in Fig. 11.5.

This will facilitate dismounting of the bearing from the shaft should it become necessary.

The method of mounting the unit on the shaft is as follows:

1) Make certain that the end of the set screw is not protruding into the bore of the bearing.

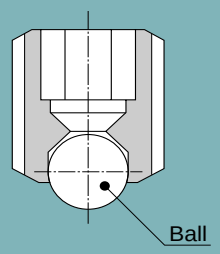


Fig. 11.4

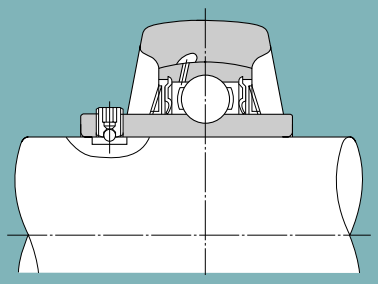

Fig. 11.5

2) Holding the unit at right angles to the shaft, insert the shaft into the bore of the bearing without twisting the bearing. Take care not to strike the slinger nor to subject the unit to any shock (Fig. 11.6).

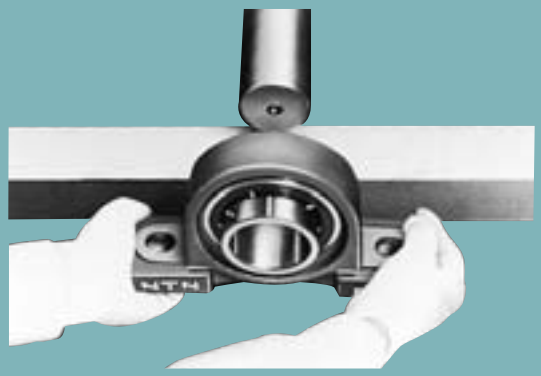

Fig. 11.6

3) Insert a hexagonal bar wrench securely into the hexagonal hole of the set screw, and tighten the two screws uniformly. Use the tightening torque shown in Table 11.3.

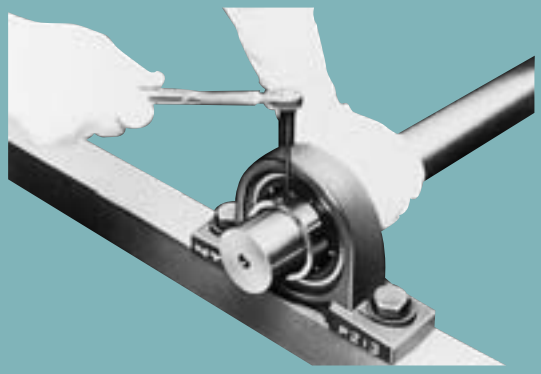

Fig. 11.7

4) Mount the housing securely in position on the machine. Sometimes the order of steps 3) and 4) is reversed.

**Table 11.3 Recommended torques for tightening set screws**

A) Metric series, applied to metric bore size.

| Designation of the bearings of applicable units | | | Designation of set screws | Tightening torques N·m (max.) |
|---|---|---|---|---|
| UC201 to UC205 | — | — | M 5×0.8 × 7 | 3.9 |
| UC206 | — | UC305 to UC306 | M 6×0.75× 8 | 4.9 |
| UC207 | UCX05 | — | M 6×0.75× 8 | 5.8 |
| UC208 to UC210 | — | — | M 8×1 ×10 | 7.8 |
| UC211 | UCX06 to UCX08 | UC307 | M 8×1 ×10 | 9.8 |
| UC212 | UCX09 | — | M10×1.25×12 | 16.6 |
| UC213 to UC215 | — | UC308 to UC309 | M10×1.25×12 | 19.6 |
| UC216 | UCX10 | — | M10×1.25×12 | 22.5 |
| — | UCX11 to UCX12 | — | M10×1.25×12 | 24.5 |
| UC217 to UC218 | UCX13 to UCX15 | UC310 to UC314 | M12×1.5 ×13 | 29.4 |
| — | UCX16 to UCX17 | — | M12×1.5 ×13 | 34.3 |
| — | UCX18 | UC315 to UC316 | M14×1.5 ×15 | 34.3 |
| — | UCX20 | UC317 to UC319 | M16×1.5 ×18 | 53.9 |
| — | — | UC320 to UC324 | M18×1.5 ×20 | 58.8 |
| — | — | UC326 to UC328 | M20×1.5 ×25 | 78.4 |

B) Inch series, applied to inch bore size.

| Designation of the bearings for the unit to which torques given are applicable | | | Designation of set screws | Tightening torques lbf· inch (max.) |
|---|---|---|---|---|
| UC201 to UC205 | — | — | No.10-32UNF | 34 |
| UC206 | — | UC305 to UC306 | 1/4-28UNF | 43 |
| UC207 | UCX05 | — | 1/4-28UNF | 52 |
| UC208 to UC210 | — | — | 5/16-24UNF | 69 |
| UC211 | UCX06 to UCX08 | UC307 | 5/16-24UNF | 86 |
| UC212 | UCX09 | — | 3/8-24UNF | 147 |
| UC213 to UC215 | — | UC308 to UC309 | 3/8-24UNF | 173 |
| UC216 | UCX10 | — | 3/8-24UNF | 199 |
| — | UCX11 to UCX12 | — | 3/8-24UNF | 216 |
| UC217 to UC218 | UCX13 to UCX15 | UC310 to UC314 | 1/2-20UNF | 260 |
| — | UCX16 to UCX17 | — | 1/2-20UNF | 303 |
| — | UCX18 | UC315 to UC316 | 9/16-18UNF | 303 |
| — | UCX20 | UC317 to UC319 | 5/8-18UNF | 477 |
| — | — | UC320 | 5/8-18UNF | 520 |

| Designation of the bearings of applicable units | Designation of set screws | Tightening torques N·m (max.) |
|---|---|---|
| AS201 to 205 | M5×0.8 × 7 | 3.4 |
| AS206 | M6×0.75× 8 | 4.4 |
| AS207 | M6×0.75× 8 | 4.9 |
| AS208 to 210 | M8×1 ×10 | 6.8 |

| Designation of the bearings for the unit to which torques given are applicable | Designation of set screws | Tightening torques lbf· inch (max.) |
|---|---|---|
| AS201 to 205 | No.10-32UNF | 30 |
| AS206 | 1/4-28UNF | 39 |
| AS207 | 1/4-28UNF | 43 |
| AS208 to 210 | 5/16-24UNF | 60 |

**11.2.2 Mounting the eccentric locking collar system unit**

In this system, unlike the screw system, the shaft and inner ring are fastened together by fastening the eccentric collar in the direction of the rotation of the shaft. They are fastened together securely, and deformation of the inner ring seldom occurs. This system, however, is not recommended for applications where the direction of rotation is sometimes reversed.

Directions for mounting the unit are as follows :

1) Make certain that the frame in which the housing is to be mounted is suitable to the operating conditions with regard to rigidity, flatness, etc.
2) Make sure that the end of the shaft is not burred and that the end of the set screw in the eccentric collar is not protruding from the interior surface of the collar (Fig. 11.8).

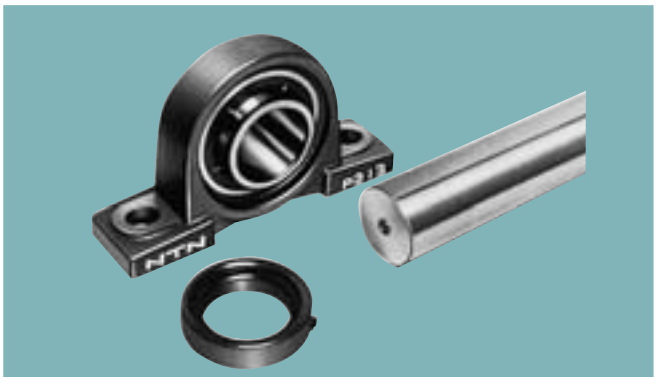


Fig. 11.8

3) Mount the housing of the unit securely onto the frame.
4) Determine the relative position of the unit and the shaft accurately so that the unit will not be subjected to any thrust, and then insert the eccentric collar (Fig. 11.9).

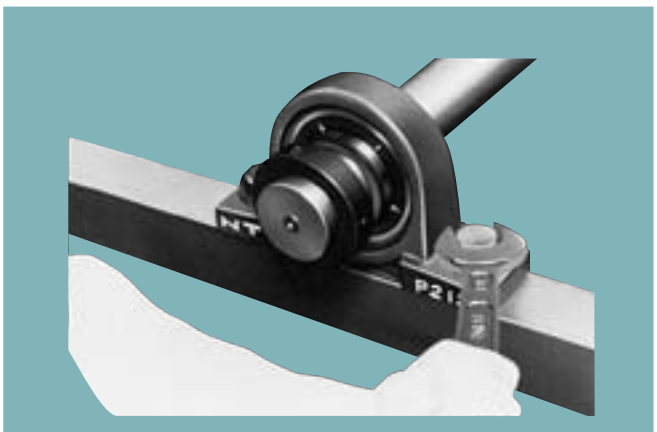

Fig. 11.9

5) Fit the eccentric circular ridge provided on the inner ring into the eccentric circular groove of the eccentric collar, and then provisionally tighten by turning the collar by hand in the direction of the shaft (Fig. 11.10).

Fig. 11.10

6) Insert a bar into the hole provided on the periphery of the eccentric collar and tap the bar so that the collar turns in the direction of rotation of the shaft (see Fig. 11.11).

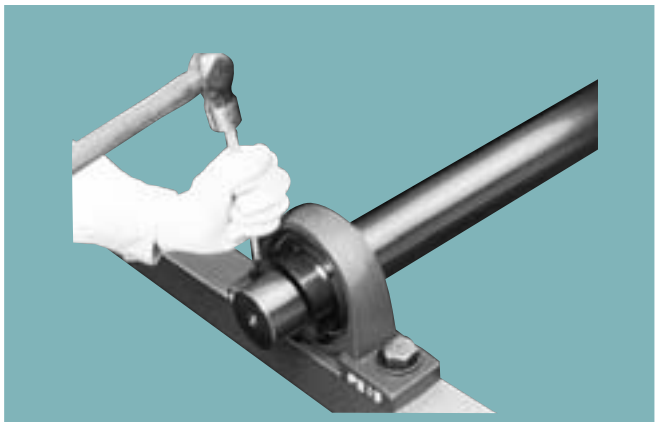

Fig. 11.11

7) Fasten the set screw of the eccentric collar onto the shaft. Recommended tightening torques are given in Table 11.4.

**Table 11.4 Recommended torques for tightening set screws of the eccentric collar**

A) Metric series, applied to metric bore size.

| Designation of the bearings of applicable units | | | Designation of set screws | Tightening torques N·m (max.) |
|---|---|---|---|---|
| — | UEL204 to UEL205 | AEL201 to AEL205 | M 6×0.75× 8 | 7.8 |
| UEL303 to UEL307 | UEL206 | AEL206 | M 8×1 ×10 | 9.8 |
| — | UEL207 | AEL207 | M10×1.25×12 | 11.7 |
| — | UEL208 to UEL210 | AEL208 to AEL210 | M10×1.25×12 | 15.6 |
| — | UEL211 | AEL211 | M10×1.25×12 | 19.6 |
| UEL308 to UEL312 | UEL212 to UEL215 | AEL212 | M10×1.25×12 | 29.4 |
| UEL313 to UEL314 | — | — | M12×1.5 ×13 | 34.3 |
| UEL315 to UEL317 | — | — | M16×1.5 ×18 | 53.9 |
| UEL318 to UEL320 | — | — | M20×1.5 ×25 | 78.4 |

B) Inch series, applied to inch bore size.

| Designation of the bearings for the unit to which torques given are applicable | | | Designation of set screws | Tightening torques lbf· inch (max.) |
|---|---|---|---|---|
| — | UEL204 to UEL205 | AEL201 to AEL205 | 1/4-28UNF | 69 |
| UEL303 to UEL307 | UEL206 | AEL206 | 5/16-24UNF | 86 |
| — | UEL207 | AEL207 | 3/8-24UNF | 104 |
| — | UEL208 to UEL210 | AEL208 to AEL210 | 3/8-24UNF | 138 |
| — | UEL211 | AEL211 | 3/8-24UNF | 173 |
| UEL308 to UEL312 | UEL212 to UEL215 | AEL212 | 3/8-24UNF | 260 |
| UEL313 to UEL314 | — | — | 1/2-20UNF | 350 |
| UEL315 to UEL317 | — | — | 5/8-18UNF | 520 |
| UEL318 to UEL328 | — | — | 3/4-16UNF | 700 |

### 11.2.3 Mounting of the adapter system unit

When an adapter system unit is used, there is no danger of the fit between the shaft and the inner ring working loose even if it is subjected to impact loads or vibration. Furthermore, straight shafts of h9 may be used under any operating conditions, except where there is a large axial load.

To mount the adapter system unit onto the shaft, the procedure is as follows:

1) Adjust the position of the sleeve so that the tapered part comes to about the center of the bearing. To facilitate the mounting of the sleeve onto the shaft, the opening in the sleeve can be widened using a screwdriver or similar implement. The sleeve should be positioned so that the nut is located on the opposite side from the pulley, etc., for easier handling (Fig. 11.12).

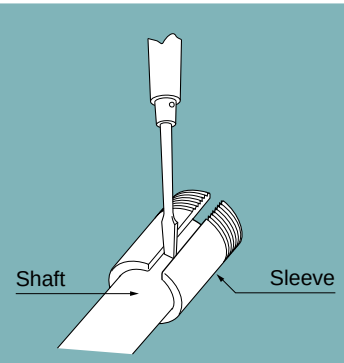


**Fig. 11.12**

2) Place the bearing unit with the tapered bore properly oriented on the sleeve and abut a cylindrical sleeve against the lock nut side face of the inner ring. Tap the adapter sleeve lightly over its entire periphery, as shown in Fig. 11.13, until a positive contact is made between the bearing and the sleeve.

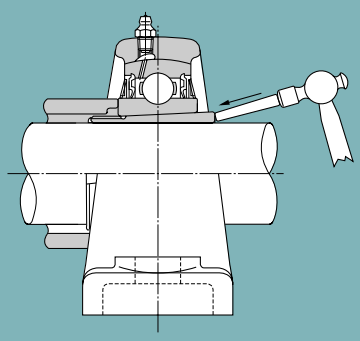

**Fig. 11.13**

3) Insert the washer and tighten the nut fully by hand.
4) Apply a jig (or screwdriver where no jig is available) to the notch of the nut and tap it with a hammer. Stop tapping after the nut has turned through from 60˚ to 90˚.
   Be careful not to strike the slinger.
   Care should also be taken not to over-tighten the nut, as this will deform the inner ring, causing heat generation and seizure.
5) Bend up the tab on the rim of the washer, which is in line with the notch of the nut. This will prevent the nut from turning. The nut must not be turned backwards to bring the notch into line with the tab on the washer.
6) Mount the housing securely in position on the machine.

### 11.2.4 Mounting covered bearing units

For selection of the shaft, mounting the bearing onto the shaft and fitting the housing follow the same procedure as for standard bearing units. Furthermore, fitting the cover presents no special difficulty, with no need for special tools or jigs.

The procedure for mounting covered bearing units is as follows:

1) Remove the cover from the bearing unit. The steel cover can usually be removed easily by hand, but should there be any difficulty due to an over-tight fit, insert a screwdriver or similar tool in a twisting motion, as shown in Fig. 11.14.

Fig. 11.14

2) In order to augment the dust and waterproofing effects, completely fill the space between the two lips of the rubber seal incorporated in the cover with grease, and apply grease to the inside of the cover, filling about two-thirds of the space. Cup grease is commonly used for this purpose (Fig. 11.15).
3) First, pass one of the two grease-packed covers along the shaft, and then slide the bearing unit onto the shaft and fix the inner ring fast on the shaft before tightening the bolts holding the housing. Sometimes these steps are reversed for convenience of assembly. It is recommended that the end of the shaft be chamfered beforehand to avoid damaging the lips of the rubber seal.
4) Next take the cover which has been passed along the shaft and press it into the housing as follows: Be careful not to strike the surface of the steel cover directly with a steel hammer but use a synthetic resin or wood block in between. Do not strike only in one place but tap the cover all the way round until it is firmly seated in the housing. (Fig. 11.16)
   The cast iron cover is fastened with three bolts.
5) Pack the second cover with grease as in step 2 and pass it along the shaft. In the case of a blind cover, the recess of the housing should be filled with grease (Fig. 11.15).
6) Fit the cover into the recess of the housing using the same procedure as detailed in Step 4) (Fig. 11.17).

Fig. 11.15

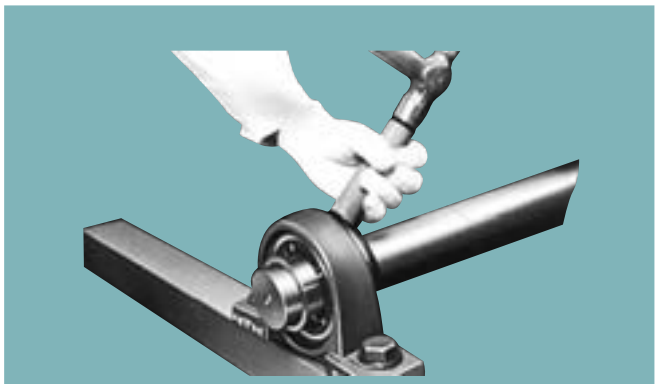
Fig. 11.16

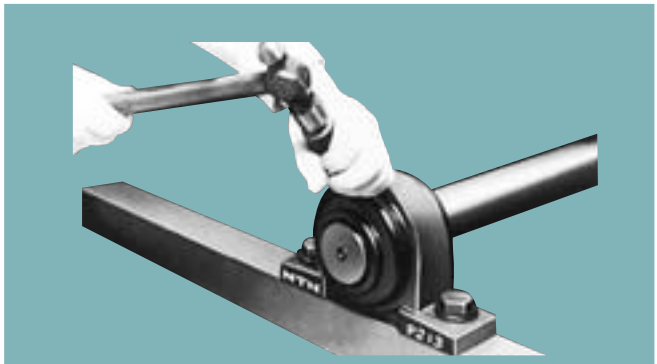
Fig. 11.17

### 11.2.5 Mounting resin covered bearing units

①Insert the edge of the dust cover in the housing's groove.
②Insert the other side of the dust cover in the opposite housing groove either by hand or with assistance of a plastic/rubber mallet/hammer.
③To remove the dust cover, pry the edge from the housing groove using a screw driver or similar tool.

※ Note: frequent mounting/dismounting of the dust cover may damage the edge of the housing and is not recommended.

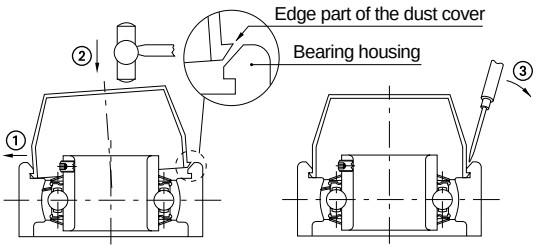


## 11.3 Running tests

After mounting the bearing unit, check that it has been done correctly.

First, turn the shaft or the rotor by hand to make certain that it rotates smoothly. If there is no irregularity, start up the machine. Run the machine at low speed under no load and gradually bring it up to full operating speed while checking that there are no abnormalities.

Some indications of abnormality or faulty assembly are as follows:

When the shaft is turned by hand a resistance or drag is felt, or the shaft appears to become heavy or light in turn. Or, if the machine is running under power, any abnormal noise, vibration or overheating is evident.

## 11.4 Inspection during operation

Although the **NTN** lubrication-free bearing unit does not require refilling with grease while in use, periodic inspections are necessary to ensure safe operation of the unit's most important parts. While the interval between inspections varies from case to case, according to the degree of importance and the rate of operation, it is usually some time between two weeks and a month.

Since the inside of the bearing can be examined only by removing the slinger, seal etc., the condition of the bearing should be judged by checking for the presence of vibration, noise, overheating of the housing, etc., while the machine is running.

## 11.5 Dismounting the bearing unit

If some abnormality makes it necessary to dismount the bearing unit from the shaft in order to replace it, the procedure used to mount the bearing is followed in reverse order. In this case, special care should be given to the following points:

1) Set screw system units:
If the set screw is protruding into the bore of the bearing when the unit is withdrawn from the shaft, it will damage the shaft. Therefore the screw should be turned back fully.

2) Adapter system units:
To remove an adapter system bearing unit from the shaft, raise the tab of the washer, turn the nut two or three turns back, and apply a metal block to the nut and tap it with a hammer. Do this all round the nut, until the sleeve can be moved (Fig. 11.18).
If the nut is turned back too far and the screws are only slightly engaged, tapping to remove it will eventually ruin the screws.

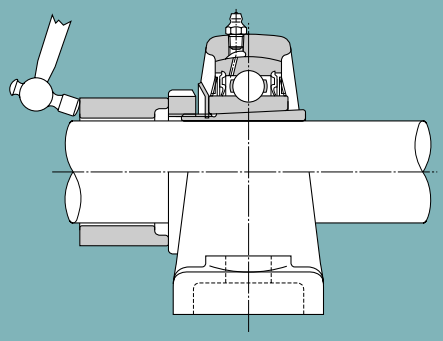

Fig. 11.18

## 11.6 Replacement of the bearing

If the bearing in the **NTN** bearing unit needs to be replaced, this can be carried out simply with a plummer block. There is no need to replace the housing, as it is reusable.

The bearing is changed using the following procedure: First, the set screw should be tightened as much as possible. Otherwise, there is a danger that it may catch in the housing when the bearing is tilted.

Next, insert the handle of a hammer or similar tool into the bore of the bearing and twist. Tilt the bearing through a full 90, and pull it in the direction of the notch on the housing to remove it. To install a new bearing in the housing, follow the same procedure in reverse.

# Dimension Table

**Set screw type (1)**

| | | | | Page |
|---|---|---|---|---|
| **Pillow blocks** | Pillow blocks cast housing | | UCP2<br>UCP3<br>UCPX | 56<br>62<br>68 |
| | Pillow blocks cast housing<br>low center height | | UCPL2<br>ASPL2 | 72<br>104 |
| | Pillow blocks<br>(Steel series) | | UCPG2<br>UCPG3 | 76<br>78 |
| | Pillow blocks<br>(Stainless series) | | F-UCPM2 | 80 |
| | Pillow blocks<br>(Plastic housing series) | | F-UCPR2 | 82 |
| | Thick pillow blocks<br>cast housing | | UCIP2<br>UCIP3 | 84<br>86 |
| | Thick pillow blocks<br>(Steel series) | | UCIPG2, 3 | 90 |
| | Pillow blocks cast housing<br>high center height | | UCHP2 | 92 |
| | Narrow pillow blocks<br>cast housing | | UCUP2 | 96 |
| | Light pillow blocks<br>cast housing | | ASPB2 | 100 |
| | Pillow blocks ductile cast housing<br>(Ductile series) | | UCPE2 | 102 |
| | Pillow blocks<br>pressed steel housing | | ASPP2<br>ASRPP2 | 108<br>110 |
| **Flanged units** | Square flanged units cast housing | | UCF2<br>UCF3<br>UCFX | 112<br>118<br>124 |
| | Square flanged units<br>(Steel series) | | UCFG2<br>UCFG3 | 130<br>132 |
| | Square flanged units cast housing<br>w/ spigot joint | | UCFS3 | 134 |
| | Square flanged units<br>w/ spigot joint (Steel series) | | UCFSG3 | 140 |
| | Round flanged units cast housing<br>w/ spigot joint | | UCFC2<br>UCFCX | 142<br>148 |
| | Round flanged units<br>w/ spigot joint (Steel series) | | UCFCG2 | 154 |
| | Rhombus flanged units<br>cast housing | | UCFL2<br>UCFL3<br>UCFLX | 156<br>162<br>168 |
| | Rhombus flanged units<br>(Steel series) | | UCFLG2<br>UCFLG3 | 170<br>172 |
| | Rhombus flanged units<br>(Stainless series) | | F-UCFM2 | 174 |
| | Rhombus flanged units<br>(Plastic housing series) | | F-UCFLR2 | 176 |
| | Modified rhombus flanged units<br>cast housing | | UCFA2 | 178 |
| | Modified flanged units<br>cast housing | | UCFH2 | 182 |
| | Light rhombus flanged units<br>cast housing | 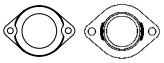 | ASFB2<br>ASFD2 | 186<br>188 |

## Set screw type (2)

| | | | | Page |
|---|---|---|---|---|
| **Flanged units** | Rhombus flanged units ductile cast housing (Ductile series) | | UCFE2 | 190 |
| | Round flanged units pressed steel housing | | ASPF2<br>ASRPF2 | 192<br>194 |
| | Rhombus flanged units pressed steel housing | | ASPFL2 | 196 |
| **Hanger units** | Hanger units cast housing | | UCHB2 | 198 |
| **Take-up units** | Take-up units cast housing | | UCT2<br>UCT3<br>UCTX | 202<br>208<br>214 |
| | Take-up units (Steel series) | | UCTG2<br>UCTG3 | 218<br>220 |
| **Cartridge units** | Cartridge units cast housing | | UCC2<br>UCC3<br>UCCX | 222<br>224<br>227 |
| **Stretcher units®** | Mini stretcher units® | | ASPT2 | 229 |
| | Take-up stretcher units® | | UCT2 | 394 |
| | Type L stretcher units® | 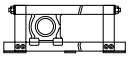 | UCL2 | 396 |
| | Type M stretcher units® | 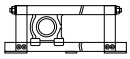 | UCM2<br>UCM3 | 397<br>398 |

## Eccentric locking collar type (1)

| | | | | Page |
|---|---|---|---|---|
| **Pillow blocks** | Pillow blocks cast housing | | UELP2<br>UELP3 | 230<br>234 |
| | Pillow blocks cast housing low center height | | UELPL2<br>AELPL2<br>JELPL2 | 240<br>248<br>252 |
| | Pillow blocks cast housing high center height | | UELHP2 | 244 |
| | Narrow pillow blocks cast housing | | UELUP2 | 246 |
| | Light pillow blocks cast housing | | AELPB2 | 256 |
| | Pillow blocks pressed steel housing | | AELPP2<br>AELRPP2 | 258<br>260 |
| **Flanged units** | Square flanged units cast housing | | UELFU2<br>UELF2<br>UELF3 | 262<br>266<br>270 |
| | Square flanged units cast housing w/ spigot joint | | UELFS3 | 276 |
| | Round flanged units cast housing w/ spigot joint | | UELFC2 | 282 |
| | Rhombus flanged units cast housing | | UELFLU2<br>UELFL2<br>UELFL3 | 286<br>290<br>294 |
| | Light rhombus flanged units cast housing | 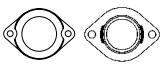 | AELFB2<br>AELFD2<br>JELFD2 | 300<br>302<br>303 |

## Eccentric locking collar type (2)

| | | | | Page |
|---|---|---|---|---|
| **Flanged units** | Round flanged units<br>pressed steel housing | | AELPF2<br>JELPF2<br>AELRPF2 | 304<br>306<br>308 |
| | Rhombus flanged units<br>pressed steel housing | | AELPFL2<br>JELPFL2 | 310<br>312 |
| **Take-up units** | Take-up units cast housing | | UELT2<br>UELT3 | 314<br>318 |
| **Cartridge units** | Cartridge units cast housing | | UELC2<br>UELC3 | 324<br>326 |
| **Stretcher units®** | Mini stretcher units® | | AELPT2<br>JELPT2 | 330<br>331 |

## Adapter type

| | | | | Page |
|---|---|---|---|---|
| **Pillow blocks** | Pillow blocks cast housing | | UKP2<br>UKP3<br>UKPX | 332<br>336<br>340 |
| **Flanged units** | Square flanged units cast housing | | UKF2<br>UKF3<br>UKFX | 344<br>348<br>352 |
| | Square flanged units cast housing<br>w/ spigot joint | | UKFS3 | 356 |
| | Round flanged units cast housing<br>w/ spigot joint | | UKFC2<br>UKFCX | 360<br>364 |
| | Rhombus flanged units<br>cast housing | | UKFL2<br>UKFL3<br>UKFLX | 368<br>372<br>376 |
| **Take-up units** | Take-up units cast housing | | UKT2<br>UKT3<br>UKTX | 378<br>382<br>386 |
| **Cartridge units** | Cartridge units cast housing | | UKC2<br>UKC3<br>UKCX | 390<br>391<br>393 |

**Ball bearings**

| | | | Page |
|---|---|---|---|
| **Set screw type** | | UC2<br>UC3<br>UCX<br>F-UC2 | 400<br>406<br>412<br>416 |
| | | AS2 | 418 |
| | | AR2 | 422 |
| | | UCS2<br>UCS3 | 460<br>464 |
| | | ASS2 | 468 |
| **Eccentric locking collar type** | | UEL2<br>UEL3 | 426<br>430 |
| | | AEL2 | 436 |
| | | JEL2 | 440 |
| | 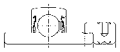 | REL2 | 444 |
| | 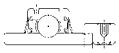 | UELS2<br>UELS3 | 472<br>476 |
| | | AELS2 | 480 |
| | | JELS2 | 484 |
| **Adapter type** | | UK2<br>UK3<br>UKX | 448<br>452<br>456 |
| **Tight fit type** | | CS2<br>CS3 | 488<br>489 |
| **Farm implement bearings** | | AS (Square bore) | 490 |
| | | AC (Round bore) | 498 |
| | | AH (Hex-bore) | 504 |

## Pillow blocks cast housing
## Set screw type

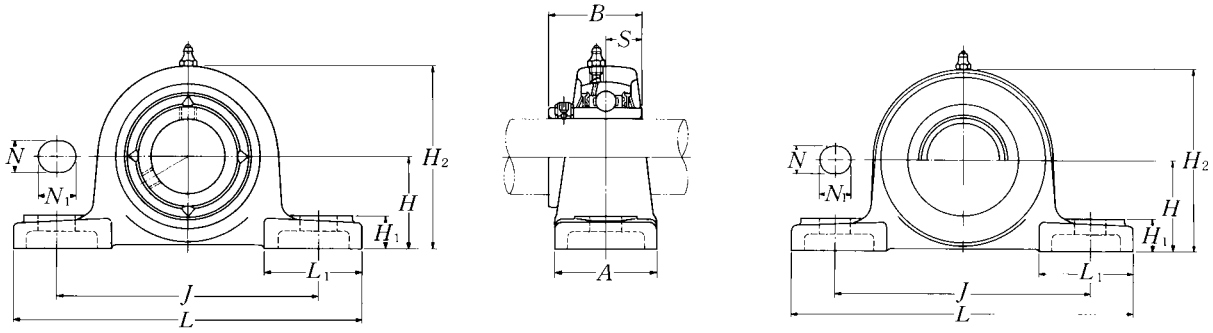


**Pressed steel dust cover type**
Open end: **S-UCP···D1**
Closed end: **SM-UCP···D1**

| Shaft dia. mm / inch | Unit number [1] | Nominal dimensions (mm / inch) H | L | J | A | N | N1 | H1 | H2 | L1 | B | S | Bolt size mm / inch | Bearing number |
|---|---|---|---|---|---|---|---|---|---|---|---|---|---|---|
| 12 | UCP201D1 | 30.2 | 127 | 95 | 38 | 13 | 16 | 14 | 62 | 42 | 31 | 12.7 | M10 | UC201D1 |
| 1/2 | UCP201-008D1 | 1 3/16 | 5 | 3 3/4 | 1 1/2 | 1/2 | 5/8 | 9/16 | 2 7/16 | 1 21/32 | 1.2205 | 0.500 | 3/8 | UC201-008D1 |
| 15 | UCP202D1 | 30.2 | 127 | 95 | 38 | 13 | 16 | 14 | 62 | 42 | 31 | 12.7 | M10 | UC202D1 |
| 9/16 | UCP202-009D1 | 1 3/16 | 5 | 3 3/4 | 1 1/2 | 1/2 | 5/8 | 9/16 | 2 7/16 | 1 21/32 | 1.2205 | 0.500 | 3/8 | UC202-009D1 |
| 5/8 | UCP202-010D1 | | | | | | | | | | | | | UC202-010D1 |
| 17 | UCP203D1 | 30.2 | 127 | 95 | 38 | 13 | 16 | 14 | 62 | 42 | 31 | 12.7 | M10 | UC203D1 |
| 11/16 | UCP203-011D1 | 1 3/16 | 5 | 3 3/4 | 1 1/2 | 1/2 | 5/8 | 9/16 | 2 7/16 | 1 21/32 | 1.2205 | 0.500 | 3/8 | UC203-011D1 |
| 20 | UCP204D1 | 33.3 | 127 | 95 | 38 | 13 | 16 | 14 | 65 | 42 | 31 | 12.7 | M10 | UC204D1 |
| 3/4 | UCP204-012D1 | 1 5/16 | 5 | 3 3/4 | 1 1/2 | 1/2 | 5/8 | 9/16 | 2 9/16 | 1 21/32 | 1.2205 | 0.500 | 3/8 | UC204-012D1 |
| 25 | UCP205D1 | 36.5 | 140 | 105 | 38 | 13 | 16 | 15 | 71 | 42 | 34.1 | 14.3 | M10 | UC205D1 |
| 13/16 | UCP205-013D1 | | | | | | | | | | | | | UC205-013D1 |
| 7/8 | UCP205-014D1 | 1 7/16 | 5 1/2 | 4 1/8 | 1 1/2 | 1/2 | 5/8 | 19/32 | 2 25/32 | 1 21/32 | 1.3425 | 0.563 | 3/8 | UC205-014D1 |
| 15/16 | UCP205-015D1 | | | | | | | | | | | | | UC205-015D1 |
| 1 | UCP205-100D1 | | | | | | | | | | | | | UC205-100D1 |
| 30 | UCP206D1 | 42.9 | 165 | 121 | 48 | 17 | 20 | 17 | 83 | 54 | 38.1 | 15.9 | M14 | UC206D1 |
| 1 1/16 | UCP206-101D1 | | | | | | | | | | | | | UC206-101D1 |
| 1 1/8 | UCP206-102D1 | 1 11/16 | 6 1/2 | 4 3/4 | 1 7/8 | 21/32 | 25/32 | 21/32 | 3 9/32 | 2 1/8 | 1.5000 | 0.626 | 1/2 | UC206-102D1 |
| 1 3/16 | UCP206-103D1 | | | | | | | | | | | | | UC206-103D1 |
| 1 1/4 | UCP206-104D1 | | | | | | | | | | | | | UC206-104D1 |
| 35 | UCP207D1 | 47.6 | 167 | 127 | 48 | 17 | 20 | 18 | 93 | 54 | 42.9 | 17.5 | M14 | UC207D1 |
| 1 1/4 | UCP207-104D1 | | | | | | | | | | | | | UC207-104D1 |
| 1 5/16 | UCP207-105D1 | 1 7/8 | 6 9/16 | 5 | 1 7/8 | 21/32 | 25/32 | 23/32 | 3 21/32 | 2 1/8 | 1.6890 | 0.689 | 1/2 | UC207-105D1 |
| 1 3/8 | UCP207-106D1 | | | | | | | | | | | | | UC207-106D1 |
| 1 7/16 | UCP207-107D1 | | | | | | | | | | | | | UC207-107D1 |
| 40 | UCP208D1 | 49.2 | 184 | 137 | 54 | 17 | 20 | 18 | 98 | 52 | 49.2 | 19 | M14 | UC208D1 |
| 1 1/2 | UCP208-108D1 | 1 15/16 | 7 1/4 | 5 13/32 | 2 1/8 | 21/32 | 25/32 | 23/32 | 3 27/32 | 2 1/16 | 1.9370 | 0.748 | 1/2 | UC208-108D1 |
| 1 9/16 | UCP208-109D1 | | | | | | | | | | | | | UC208-109D1 |
| 45 | UCP209D1 | 54 | 190 | 146 | 54 | 17 | 20 | 20 | 106 | 60 | 49.2 | 19 | M14 | UC209D1 |
| 1 5/8 | UCP209-110D1 | | | | | | | | | | | | | UC209-110D1 |
| 1 11/16 | UCP209-111D1 | 2 1/8 | 7 15/32 | 5 3/4 | 2 1/8 | 21/32 | 25/32 | 25/32 | 4 3/16 | 2 3/8 | 1.9370 | 0.748 | 1/2 | UC209-111D1 |
| 1 3/4 | UCP209-112D1 | | | | | | | | | | | | | UC209-112D1 |

Remarks: 1) These numbers indicate relubricatable type. If maintenance free type is needed, please order without suffix "D1".
Note: Please refer to page 36 for size of grease fitting.

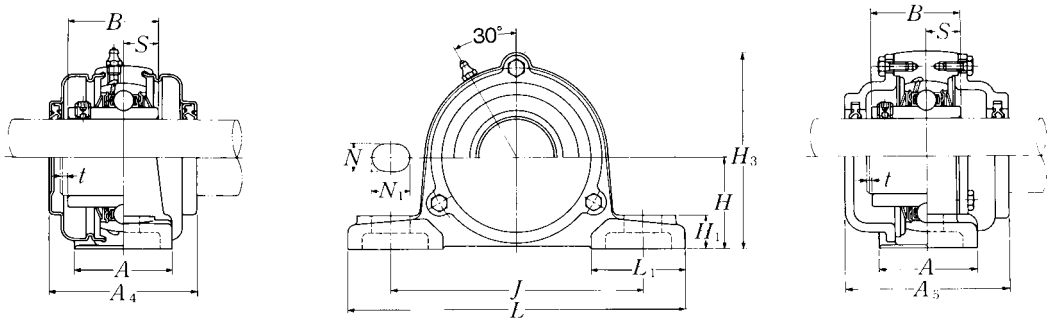


**Cast dust cover type**
Open end: **C-UCP···D1**
Closed end: **CM-UCP···D1**

| Housing 1) number | Unit number 1) pressed steel dust cover type | Unit number 1) cast dust cover type | Nominal dimensions | | | | Mass of unit | | |
|---|---|---|---|---|---|---|---|---|---|
| | | | | mm | inch | | | kg | lb |
| | | | $t$ max. | $A_4$ | $H_3$ | $A_5$ | UCP | S(SM) | C(CM) |
| P203D1 | S(SM)-UCP201D1 | C(CM)-UCP201D1 | 2 | 51 | 67 | 62 | 0.7 | 0.7 | 1.0 |
| P203D1 | S(SM)-UCP201-008D1 | C(CM)-UCP201-008D1 | 5/64 | 2 | 2 5/8 | 2 7/16 | 1.5 | 1.5 | 2.2 |
| P203D1 | S(SM)-UCP202D1 | C(CM)-UCP202D1 | 2 | 51 | 67 | 62 | 0.7 | 0.7 | 1.0 |
| P203D1 | S(SM)-UCP202-009D1 | C(CM)-UCP202-009D1 | 5/64 | 2 | 2 5/8 | 2 7/16 | 1.5 | 1.5 | 2.2 |
| P203D1 | S(SM)-UCP202-010D1 | C(CM)-UCP202-010D1 | | | | | | | |
| P203D1 | S(SM)-UCP203D1 | C(CM)-UCP203D1 | 2 | 51 | 67 | 62 | 0.7 | 0.7 | 1.0 |
| P203D1 | S(SM)-UCP203-011D1 | C(CM)-UCP203-011D1 | 5/64 | 2 | 2 5/8 | 2 7/16 | 1.5 | 1.5 | 2.2 |
| P204D1 | S(SM)-UCP204D1 | C(CM)-UCP204D1 | 2 | 51 | 70 | 62 | 0.7 | 0.7 | 0.9 |
| P204D1 | S(SM)-UCP204-012D1 | C(CM)-UCP204-012D1 | 5/64 | 2 | 2 3/4 | 2 7/16 | 1.5 | 1.5 | 2.0 |
| P205D1 | S(SM)-UCP205D1 | C(CM)-UCP205D1 | 2 | 57 | 76 | 70 | 0.8 | 0.9 | 1.1 |
| P205D1 | S(SM)-UCP205-013D1 | C(CM)-UCP205-013D1 | | | | | | | |
| P205D1 | S(SM)-UCP205-014D1 | C(CM)-UCP205-014D1 | 5/64 | 2 1/4 | 3 | 2 3/4 | 1.8 | 2.0 | 2.4 |
| P205D1 | S(SM)-UCP205-015D1 | C(CM)-UCP205-015D1 | | | | | | | |
| P205D1 | S(SM)-UCP205-100D1 | C(CM)-UCP205-100D1 | | | | | | | |
| P206D1 | S(SM)-UCP206D1 | C(CM)-UCP206D1 | 2 | 62 | 88 | 75 | 1.4 | 1.4 | 1.7 |
| P206D1 | S(SM)-UCP206-101D1 | C(CM)-UCP206-101D1 | | | | | | | |
| P206D1 | S(SM)-UCP206-102D1 | C(CM)-UCP206-102D1 | 5/64 | 2 7/16 | 3 15/32 | 2 15/16 | 3.1 | 3.1 | 3.8 |
| P206D1 | S(SM)-UCP206-103D1 | C(CM)-UCP206-103D1 | | | | | | | |
| P206D1 | S(SM)-UCP206-104D1 | C(CM)-UCP206-104D1 | | | | | | | |
| P207D1 | S(SM)-UCP207D1 | C(CM)-UCP207D1 | 3 | 72 | 99 | 80 | 1.6 | 1.7 | 2.0 |
| P207D1 | S(SM)-UCP207-104D1 | C(CM)-UCP207-104D1 | | | | | | | |
| P207D1 | S(SM)-UCP207-105D1 | C(CM)-UCP207-105D1 | 1/8 | 2 27/32 | 3 29/32 | 3 5/32 | 3.5 | 3.7 | 4.4 |
| P207D1 | S(SM)-UCP207-106D1 | C(CM)-UCP207-106D1 | | | | | | | |
| P207D1 | S(SM)-UCP207-107D1 | C(CM)-UCP207-107D1 | | | | | | | |
| P208D1 | S(SM)-UCP208D1 | C(CM)-UCP208D1 | 3 | 82 | 105 | 90 | 1.9 | 2.1 | 2.7 |
| P208D1 | S(SM)-UCP208-108D1 | C(CM)-UCP208-108D1 | 1/8 | 3 7/32 | 4 1/8 | 3 17/32 | 4.2 | 4.6 | 6.0 |
| P208D1 | S(SM)-UCP208-109D1 | C(CM)-UCP208-109D1 | | | | | | | |
| P209D1 | S(SM)-UCP209D1 | C(CM)-UCP209D1 | 3 | 82 | 113 | 95 | 2.2 | 2.4 | 3.1 |
| P209D1 | S(SM)-UCP209-110D1 | C(CM)-UCP209-110D1 | | | | | | | |
| P209D1 | S(SM)-UCP209-111D1 | C(CM)-UCP209-111D1 | 1/8 | 3 7/32 | 4 7/16 | 3 3/4 | 4.9 | 5.3 | 6.8 |
| P209D1 | S(SM)-UCP209-112D1 | C(CM)-UCP209-112D1 | | | | | | | |

## Pillow blocks cast housing
## Set screw type

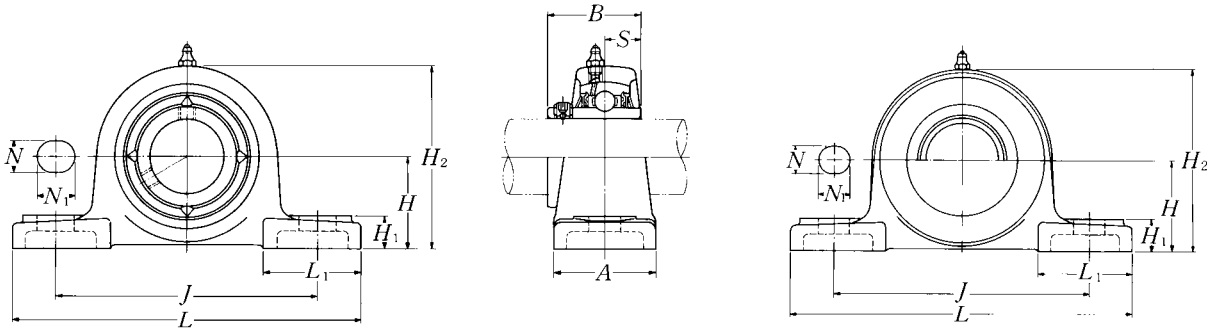


**Pressed steel dust cover type**
Open end: **S-UCP···D1**
Closed end: **SM-UCP···D1**

| Shaft dia. mm / inch | Unit number [1] | Nominal dimensions mm / inch H | L | J | A | N | N1 | H1 | H2 | L1 | B | S | Bolt size mm / inch | Bearing number |
|---|---|---|---|---|---|---|---|---|---|---|---|---|---|---|
| **50** | **UCP210D1** | 57.2 | 206 | 159 | 60 | 20 | 23 | 21 | 114 | 65 | 51.6 | 19 | M16 | UC210D1 |
| **1 13/16** | **UCP210-113D1** | | | | | | | | | | | | | UC210-113D1 |
| **1 7/8** | **UCP210-114D1** | 2 1/4 | 8 1/8 | 6 1/4 | 2 3/8 | 25/32 | 29/32 | 13/16 | 4 1/2 | 2 9/16 | 2.0315 | 0.748 | 5/8 | UC210-114D1 |
| **1 15/16** | **UCP210-115D1** | | | | | | | | | | | | | UC210-115D1 |
| **2** | **UCP210-200D1** | | | | | | | | | | | | | UC210-200D1 |
| **55** | **UCP211D1** | 63.5 | 219 | 171 | 60 | 20 | 23 | 23 | 126 | 65 | 55.6 | 22.2 | M16 | UC211D1 |
| **2** | **UCP211-200D1** | | | | | | | | | | | | | UC211-200D1 |
| **2 1/16** | **UCP211-201D1** | 2 1/2 | 8 5/8 | 6 23/32 | 2 3/8 | 25/32 | 29/32 | 29/32 | 4 31/32 | 2 9/16 | 2.1890 | 0.874 | 5/8 | UC211-201D1 |
| **2 1/8** | **UCP211-202D1** | | | | | | | | | | | | | UC211-202D1 |
| **2 3/16** | **UCP211-203D1** | | | | | | | | | | | | | UC211-203D1 |
| **60** | **UCP212D1** | 69.8 | 241 | 184 | 70 | 20 | 23 | 25 | 138 | 70 | 65.1 | 25.4 | M16 | UC212D1 |
| **2 1/4** | **UCP212-204D1** | | | | | | | | | | | | | UC212-204D1 |
| **2 5/16** | **UCP212-205D1** | 2 3/4 | 9 1/2 | 7 1/4 | 2 3/4 | 25/32 | 29/32 | 31/32 | 5 7/16 | 2 3/4 | 2.5630 | 1.000 | 5 5/8 | UC212-205D1 |
| **2 3/8** | **UCP212-206D1** | | | | | | | | | | | | | UC212-206D1 |
| **2 7/16** | **UCP212-207D1** | | | | | | | | | | | | | UC212-207D1 |
| **65** | **UCP213D1** | 76.2 | 265 | 203 | 70 | 25 | 28 | 27 | 151 | 77 | 65.1 | 25.4 | M20 | UC213D1 |
| **2 1/2** | **UCP213-208D1** | 3 | 10 7/16 | 8 | 2 3/4 | 31/32 | 1 3/32 | 1 1/16 | 5 15/16 | 3 1/32 | 2.5630 | 1.000 | 3/4 | UC213-208D1 |
| **2 9/16** | **UCP213-209D1** | | | | | | | | | | | | | UC213-209D1 |
| **70** | **UCP214D1** | 79.4 | 266 | 210 | 72 | 25 | 28 | 27 | 157 | 77 | 74.6 | 30.2 | M20 | UC214D1 |
| **2 5/8** | **UCP214-210D1** | | | | | | | | | | | | | UC214-210D1 |
| **2 11/16** | **UCP214-211D1** | 3 1/8 | 10 15/32 | 8 9/32 | 2 27/32 | 31/32 | 1 3/32 | 1 1/16 | 6 3/16 | 3 1/32 | 2.9370 | 1.189 | 3/4 | UC214-211D1 |
| **2 3/4** | **UCP214-212D1** | | | | | | | | | | | | | UC214-212D1 |
| **75** | **UCP215D1** | 82.6 | 275 | 217 | 74 | 25 | 28 | 28 | 163 | 80 | 77.8 | 33.3 | M20 | UC215D1 |
| **2 13/16** | **UCP215-213D1** | | | | | | | | | | | | | UC215-213D1 |
| **2 7/8** | **UCP215-214D1** | 3 1/4 | 10 13/16 | 8 17/32 | 2 29/32 | 31/32 | 1 3/32 | 1 3/32 | 6 13/32 | 3 5/32 | 3.0630 | 1.311 | 3/4 | UC215-214D1 |
| **2 15/16** | **UCP215-215D1** | | | | | | | | | | | | | UC215-215D1 |
| **3** | **UCP215-300D1** | | | | | | | | | | | | | UC215-300D1 |
| **80** | **UCP216D1** | 88.9 | 292 | 232 | 78 | 25 | 28 | 30 | 175 | 85 | 82.6 | 33.3 | M20 | UC216D1 |
| **3 1/16** | **UCP216-301D1** | | | | | | | | | | | | | UC216-301D1 |
| **3 1/8** | **UCP216-302D1** | 3 1/2 | 11 1/2 | 9 1/8 | 3 1/16 | 31/32 | 1 3/32 | 1 3/16 | 6 7/8 | 3 11/32 | 3.2520 | 1.311 | 3/4 | UC216-302D1 |
| **3 3/16** | **UCP216-303D1** | | | | | | | | | | | | | UC216-303D1 |

Remarks: 1) These numbers indicate relubricatable type. If maintenance free type is needed, please order without suffix "D1".
Note: Please refer to page 36 for size of grease fitting.

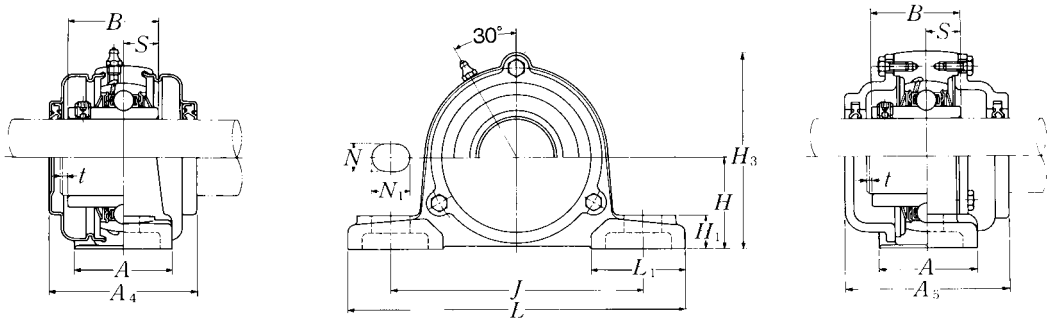


**Cast dust cover type**
Open end: **C-UCP···D1**
Closed end: **CM-UCP···D1**

| Housing 1) number | Unit number 1) pressed steel dust cover type | Unit number 1) cast dust cover type | Nominal dimensions | | | | Mass of unit | | |
|---|---|---|---|---|---|---|---|---|---|
| | | | | mm | inch | | kg | | lb |
| | | | $t$ max. | $A_4$ | $H_3$ | $A_5$ | UCP | S(SM) | C(CM) |
| P210D1 | S(SM)-UCP210D1 | C(CM)-UCP210D1 | 3 | 87 | 119 | 100 | 2.7 | 2.8 | 3.6 |
| P210D1 | S(SM)-UCP210-113D1 | C(CM)-UCP210-113D1 | | | | | | | |
| P210D1 | S(SM)-UCP210-114D1 | C(CM)-UCP210-114D1 | 1/8 | 3 7/16 | 4 11/16 | 3 15/16 | 6.0 | 6.2 | 7.9 |
| P210D1 | S(SM)-UCP210-115D1 | C(CM)-UCP210-115D1 | | | | | | | |
| P210D1 | S(SM)-UCP210-200D1 | C(CM)-UCP210-200D1 | | | | | | | |
| P211D1 | S(SM)-UCP211D1 | C(CM)-UCP211D1 | 4 | 92 | 130 | 100 | 3.5 | 3.5 | 4.4 |
| P211D1 | S(SM)-UCP211-200D1 | C(CM)-UCP211-200D1 | | | | | | | |
| P211D1 | S(SM)-UCP211-201D1 | C(CM)-UCP211-201D1 | 5/32 | 3 5/8 | 5 1/8 | 3 15/16 | 7.7 | 7.7 | 9.7 |
| P211D1 | S(SM)-UCP211-202D1 | C(CM)-UCP211-202D1 | | | | | | | |
| P211D1 | S(SM)-UCP211-203D1 | C(CM)-UCP211-203D1 | | | | | | | |
| P212D1 | S(SM)-UCP212D1 | C(CM)-UCP212D1 | 4 | 102 | 143 | 115 | 4.7 | 5.0 | 6.0 |
| P212D1 | S(SM)-UCP212-204D1 | C(CM)-UCP212-204D1 | | | | | | | |
| P212D1 | S(SM)-UCP212-205D1 | C(CM)-UCP212-205D1 | 5/32 | 4 1/32 | 5 5/8 | 4 17/32 | 10 | 11 | 13 |
| P212D1 | S(SM)-UCP212-206D1 | C(CM)-UCP212-206D1 | | | | | | | |
| P212D1 | S(SM)-UCP212-207D1 | C(CM)-UCP212-207D1 | | | | | | | |
| P213D1 | S(SM)-UCP213D1 | C(CM)-UCP213D1 | 4 | 107 | 155 | 120 | 5.6 | 5.8 | 7.2 |
| P213D1 | S(SM)-UCP213-208D1 | C(CM)-UCP211-208D1 | 5/32 | 4 7/32 | 6 3/32 | 4 23/32 | 12 | 13 | 16 |
| P213D1 | S(SM)-UCP213-209D1 | C(CM)-UCP213-209D1 | | | | | | | |
| P214D1 | — | C(CM)-UCP214D1 | 4 | — | 162 | 135 | 6.5 | — | 8.3 |
| P214D1 | | C(CM)-UCP214-210D1 | | | | | | | |
| P214D1 | — | C(CM)-UCP214-211D1 | 5/32 | — | 6 3/8 | 5 5/16 | 14 | — | 18 |
| P214D1 | | C(CM)-UCP214-212D1 | | | | | | | |
| P215D1 | — | C(CM)-UCP215D1 | 4 | — | 168 | 135 | 7.2 | — | 9.3 |
| P215D1 | | C(CM)-UCP215-213D1 | | | | | | | |
| P215D1 | — | C(CM)-UCP215-214D1 | 5/32 | — | 6 5/8 | 5 5/16 | 16 | — | 21 |
| P215D1 | | C(CM)-UCP215-215D1 | | | | | | | |
| P215D1 | | C(CM)-UCP215-300D1 | | | | | | | |
| P216D1 | — | C(CM)-UCP216D1 | 4 | — | 181 | 145 | 8.7 | — | 11 |
| P216D1 | | C(CM)-UCP216-301D1 | | | | | | | |
| P216D1 | — | C(CM)-UCP216-302D1 | 5/32 | — | 7 1/8 | 5 23/32 | 19 | — | 24 |
| P216D1 | | C(CM)-UCP216-303D1 | | | | | | | |

## Pillow blocks cast housing
## Set screw type

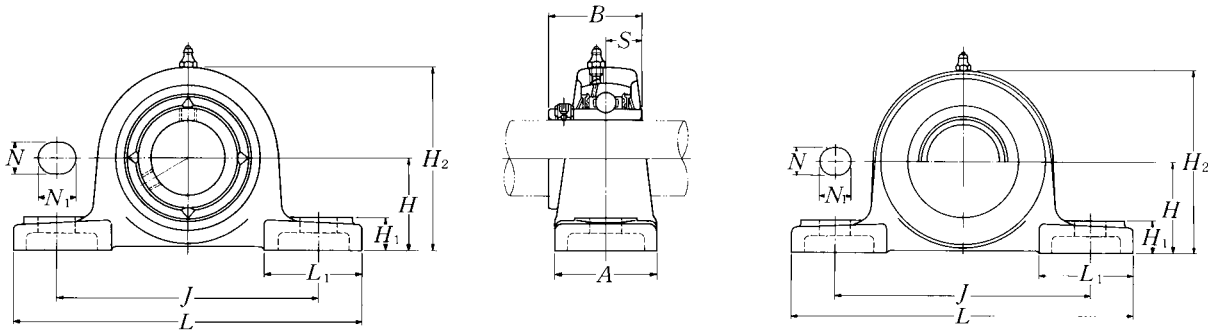


**Pressed steel dust cover type**
Open end: **S-UCP···D1**
Closed end: **SM-UCP···D1**

| Shaft dia. mm / inch | Unit number [1] | Nominal dimensions mm / inch H | L | J | A | N | N1 | H1 | H2 | L1 | B | S | Bolt size mm / inch | Bearing number |
|---|---|---|---|---|---|---|---|---|---|---|---|---|---|---|
| **85** | **UCP217D1** | 95.2 | 310 | 247 | 83 | 25 | 28 | 32 | 187 | 85 | 85.7 | 34.1 | M20 | UC217D1 |
| **3 1/4** | **UCP217-304D1** | | | | | | | | | | | | | UC217-304D1 |
| **3 5/16** | **UCP217-305D1** | 3 3/4 | 12 7/32 | 9 23/32 | 3 9/32 | 31/32 | 1 3/32 | 1 1/4 | 7 3/8 | 3 11/32 | 3.3740 | 1.343 | 3/4 | UC217-305D1 |
| **3 7/16** | **UCP217-307D1** | | | | | | | | | | | | | UC217-307D1 |
| **90** | **UCP218D1** | 101.6 | 327 | 262 | 88 | 27 | 30 | 33 | 200 | 90 | 96 | 39.7 | M22 | UC218D1 |
| **3 1/2** | **UCP218-308D1** | 4 | 12 7/8 | 10 5/16 | 3 15/32 | 1 1/16 | 1 3/16 | 1 5/16 | 7 7/8 | 3 17/32 | 3.7795 | 1.563 | 7/8 | UC218-308D1 |

Remarks: 1) These numbers indicate relubricatable type. If maintenance free type is needed, please order without suffix "D1".
Note: Please refer to page 36 for size of grease fitting.

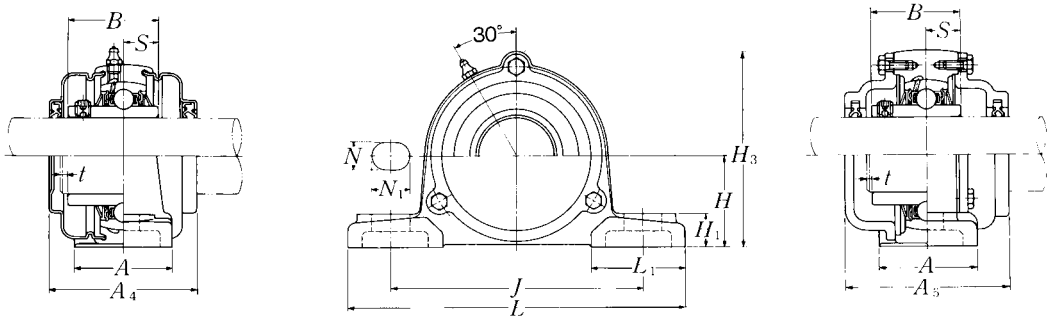


**Cast dust cover type**
Open end: **C-UCP···D1**
Closed end: **CM-UCP···D1**

| Housing 1) number | Unit number 1) pressed steel dust cover type | Unit number 1) cast dust cover type | Nominal dimensions | | | | Mass of unit | | |
|---|---|---|---|---|---|---|---|---|---|
| | | | mm | | inch | | kg | | lb |
| | | | $t$ max. | $A_4$ | $H_3$ | $A_5$ | UCP | S(SM) | C(CM) |
| P217D1 | — | C(CM)-UCP217D1 | 5 | — | 191 | 155 | 11 | — | 13 |
| P217D1 | | C(CM)-UCP217-304D1 | | | | | | | |
| P217D1 | — | C(CM)-UCP217-305D1 | 13/64 | — | 7 17/32 | 6 3/32 | 24 | — | 29 |
| P217D1 | | C(CM)-UCP217-307D1 | | | | | | | |
| P218D1 | — | C(CM)-UCP218D1 | 5 | — | 204 | 165 | 13 | — | 16 |
| P218D1 | — | C(CM) UCP218-308D1 | 13/64 | — | 8 1/32 | 6 1/2 | 29 | — | 35 |

## Pillow blocks cast housing
## Set screw type

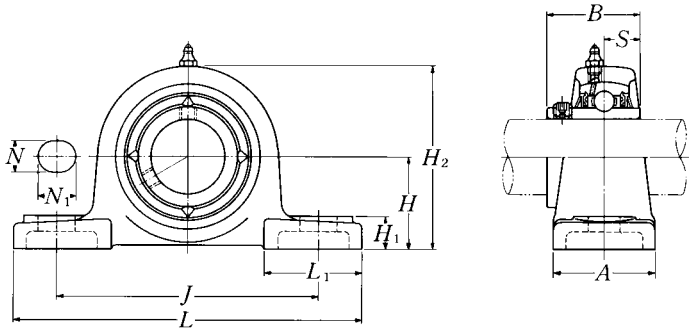


| Shaft dia. mm / inch | Unit number [1] | Nominal dimensions mm / inch H | L | J | A | N | N1 | H1 | H2 | L1 | B | S | Bolt size mm / inch | Bearing number |
|---|---|---|---|---|---|---|---|---|---|---|---|---|---|---|
| 25 | UCP305D1 | 45 | 175 | 132 | 45 | 17 | 20 | 15 | 85 | 54 | 38 | 15 | M14 | UC305D1 |
| 13/16 | UCP305-013D1 | | | | | | | | | | | | | UC305-013D1 |
| 7/8 | UCP305-014D1 | 1 49/64 | 6 7/8 | 5 3/16 | 1 25/32 | 21/32 | 25/32 | 19/32 | 3 11/32 | 2 1/8 | 1.4961 | 0.591 | 1/2 | UC305-014D1 |
| 15/16 | UCP305-015D1 | | | | | | | | | | | | | UC305-015D1 |
| 1 | UCP305-100D1 | | | | | | | | | | | | | UC305-100D1 |
| 30 | UCP306D1 | 50 | 180 | 140 | 50 | 17 | 20 | 18 | 95 | 54 | 43 | 17 | M14 | UC306D1 |
| 1 1/16 | UCP306-101D1 | | | | | | | | | | | | | UC306-101D1 |
| 1 1/8 | UCP306-102D1 | 1 31/32 | 7 3/32 | 5 1/2 | 1 31/32 | 21/32 | 25/32 | 23/32 | 3 3/4 | 2 1/8 | 1.6929 | 0.669 | 1/2 | UC306-102D1 |
| 1 3/16 | UCP306-103D1 | | | | | | | | | | | | | UC306-103D1 |
| 35 | UCP307D1 | 56 | 210 | 160 | 56 | 17 | 25 | 20 | 106 | 60 | 48 | 19 | M14 | UC307D1 |
| 1 1/4 | UCP307-104D1 | | | | | | | | | | | | | UC307-104D1 |
| 1 5/16 | UCP307-105D1 | 2 13/64 | 8 9/32 | 6 5/16 | 2 7/32 | 21/32 | 31/32 | 25/32 | 4 3/16 | 2 3/8 | 1.8898 | 0.748 | 1/2 | UC307-105D1 |
| 1 3/8 | UCP307-106D1 | | | | | | | | | | | | | UC307-106D1 |
| 1 7/16 | UCP307-107D1 | | | | | | | | | | | | | UC307-107D1 |
| 40 | UCP308D1 | 60 | 220 | 170 | 60 | 17 | 27 | 22 | 116 | 60 | 52 | 19 | M14 | UC308D1 |
| 1 1/2 | UCP308-108D1 | 2 23/64 | 8 21/32 | 6 11/16 | 2 3/8 | 21/32 | 1 1/16 | 7/8 | 4 9/16 | 2 3/8 | 2.0472 | 0.748 | 1/2 | UC308-108D1 |
| 1 9/16 | UCP308-109D1 | | | | | | | | | | | | | UC308-109D1 |
| 45 | UCP309D1 | 67 | 245 | 190 | 67 | 20 | 30 | 24 | 129 | 65 | 57 | 22 | M16 | UC309D1 |
| 1 5/8 | UCP309-110D1 | | | | | | | | | | | | | UC309-110D1 |
| 1 11/16 | UCP309-111D1 | 2 41/64 | 9 21/32 | 7 15/32 | 2 5/8 | 25/32 | 1 3/16 | 15/16 | 5 3/32 | 2 9/16 | 2.2441 | 0.866 | 5/8 | UC309-111D1 |
| 1 3/4 | UCP309-112D1 | | | | | | | | | | | | | UC309-112D1 |
| 50 | UCP310D1 | 75 | 275 | 212 | 75 | 20 | 35 | 27 | 143 | 75 | 61 | 22 | M16 | UC310D1 |
| 1 13/16 | UCP310-113D1 | | | | | | | | | | | | | UC310-113D1 |
| 1 7/8 | UCP310-114D1 | 2 61/64 | 10 13/16 | 8 11/32 | 2 15/16 | 25/32 | 1 3/8 | 1 1/16 | 5 5/8 | 2 15/16 | 2.4016 | 0.866 | 5/8 | UC310-114D1 |
| 1 15/16 | UCP310-115D1 | | | | | | | | | | | | | UC310-115D1 |
| 55 | UCP311D1 | 80 | 310 | 236 | 80 | 20 | 38 | 30 | 154 | 85 | 66 | 25 | M16 | UC311D1 |
| 2 | UCP311-200D1 | | | | | | | | | | | | | UC311-200D1 |
| 2 1/16 | UCP311-201D1 | 3 5/32 | 12 7/32 | 9 9/32 | 3 5/32 | 25/32 | 1 1/2 | 1 3/16 | 6 1/16 | 3 11/32 | 2.5984 | 0.984 | 5/8 | UC311-201D1 |
| 2 1/8 | UCP311-202D1 | | | | | | | | | | | | | UC311-202D1 |
| 2 3/16 | UCP311-203D1 | | | | | | | | | | | | | UC311-203D1 |

Remarks: 1) These numbers indicate relubricatable type. If maintenance free type is needed, please order without suffix "D1".
Note: Please refer to page 36 for size of grease fitting.

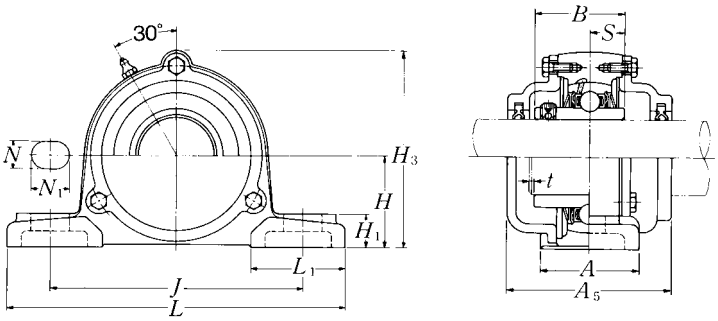


**Cast dust cover type**
Open end: **C-UCP···D1**
Closed end: **CM-UCP···D1**

| Housing [1] number | Unit number [1] cast dust cover type | Nominal dimensions mm | | inch | Mass of unit kg | lb |
|---|---|---|---|---|---|---|
| | | $t$ max. | $H_3$ | $A_5$ | UCP | C(CM) |
| P305D1 | C(CM)-UCP305D1 | 2 | 91 | 80 | 1.4 | 1.8 |
| P305D1 | C(CM)-UCP305-013D1 | | | | | |
| P305D1 | C(CM)-UCP305-014D1 | 5/64 | 3 19/32 | 3 5/32 | 3.1 | 4.0 |
| P305D1 | C(CM)-UCP305-015D1 | | | | | |
| P305D1 | C(CM)-UCP305-100D1 | | | | | |
| P306D1 | C(CM)-UCP306D1 | 2 | 105 | 85 | 1.8 | 2.5 |
| P306D1 | C(CM)-UCP306-101D1 | | | | | |
| P306D1 | C(CM)-UCP306-102D1 | 5/64 | 4 1/8 | 3 11/32 | 4.0 | 5.5 |
| P306D1 | C(CM)-UCP306-103D1 | | | | | |
| P307D1 | C(CM)-UCP307D1 | 3 | 115 | 95 | 2.5 | 3.2 |
| P307D1 | C(CM)-UCP307-104D1 | | | | | |
| P307D1 | C(CM)-UCP307-105D1 | 1/8 | 4 17/32 | 3 3/4 | 5.5 | 7.1 |
| P307D1 | C(CM)-UCP307-106D1 | | | | | |
| P307D1 | C(CM)-UCP307-107D1 | | | | | |
| P308D1 | C(CM)-UCP308D1 | 3 | 125 | 105 | 3.1 | 4.0 |
| P308D1 | C(CM)-UCP308-108D1 | 1/8 | 4 29/32 | 4 1/8 | 6.8 | 8.8 |
| P308D1 | C(CM)-UCP308-109D1 | | | | | |
| P309D1 | C(CM)-UCP309D1 | 3 | 140 | 110 | 4.1 | 5.4 |
| P309D1 | C(CM)-UCP309-110D1 | | | | | |
| P309D1 | C(CM)-UCP309-111D1 | 1/8 | 5 1/2 | 4 11/32 | 9.0 | 12 |
| P309D1 | C(CM)-UCP309-112D1 | | | | | |
| P310D1 | C(CM)-UCP310D1 | 3 | 156 | 120 | 5.6 | 7.0 |
| P310D1 | C(CM)-UCP310-113D1 | | | | | |
| P310D1 | C(CM)-UCP310-114D1 | 1/8 | 6 5/32 | 4 23/32 | 12 | 15 |
| P310D1 | C(CM)-UCP310-115D1 | | | | | |
| P311D1 | C(CM)-UCP311D1 | 4 | 166 | 125 | 7.3 | 8.8 |
| P311D1 | C(CM)-UCP311-200D1 | | | | | |
| P311D1 | C(CM)-UCP311-201D1 | 5/32 | 6 17/32 | 4 29/32 | 16 | 19 |
| P311D1 | C(CM)-UCP311-202D1 | | | | | |
| P311D1 | C(CM)-UCP311-203D1 | | | | | |

## Pillow blocks cast housing
## Set screw type

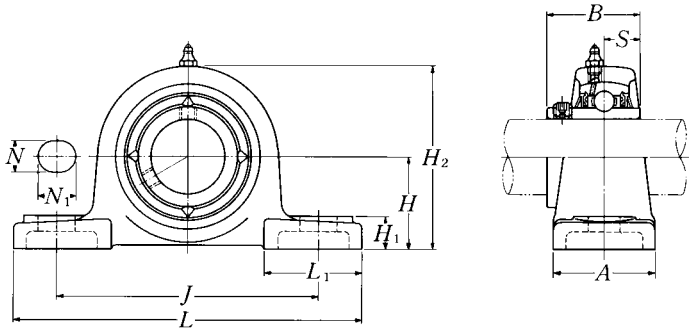


| Shaft dia. mm / inch | Unit number [1] | Nominal dimensions mm / inch H | L | J | A | N | N1 | H1 | H2 | L1 | B | S | Bolt size mm / inch | Bearing number |
|---|---|---|---|---|---|---|---|---|---|---|---|---|---|---|
| 60 | UCP312D1 | 85 | 330 | 250 | 85 | 25 | 38 | 32 | 165 | 95 | 71 | 26 | M20 | UC312D1 |
| 2 1/4 | UCP312-204D1 | | | | | | | | | | | | | UC312-204D1 |
| 2 5/16 | UCP312-205D1 | 3 11/32 | 13 | 9 27/32 | 3 11/32 | 31/32 | 1 1/2 | 1 1/4 | 6 1/2 | 3 3/4 | 2.7953 | 1.024 | 3/4 | UC312-205D1 |
| 2 3/8 | UCP312-206D1 | | | | | | | | | | | | | UC312-206D1 |
| 2 7/16 | UCP312-207D1 | | | | | | | | | | | | | UC312-207D1 |
| 65 | UCP313D1 | 90 | 340 | 260 | 90 | 25 | 38 | 33 | 176 | 105 | 75 | 30 | M20 | UC313D1 |
| 2 1/2 | UCP313-208D1 | 3 35/64 | 13 3/8 | 10 1/4 | 3 17/32 | 31/32 | 1 1/2 | 1 5/16 | 6 15/16 | 4 1/8 | 2.9528 | 1.181 | 3/4 | UC313-208D1 |
| 2 9/16 | UCP313-209D1 | | | | | | | | | | | | | UC313-209D1 |
| 70 | UCP314D1 | 95 | 360 | 280 | 90 | 27 | 40 | 35 | 187 | 105 | 78 | 33 | M22 | UC314D1 |
| 2 5/8 | UCP314-210D1 | | | | | | | | | | | | | UC314-210D1 |
| 2 11/16 | UCP314-211D1 | 3 47/64 | 14 3/16 | 11 1/32 | 3 17/32 | 1 1/16 | 1 9/16 | 1 3/8 | 7 3/8 | 4 1/8 | 3.0709 | 1.299 | 7/8 | UC314-211D1 |
| 2 3/4 | UCP314-212D1 | | | | | | | | | | | | | UC314-212D1 |
| 75 | UCP315D1 | 100 | 380 | 290 | 100 | 27 | 40 | 35 | 198 | 110 | 82 | 32 | M22 | UC315D1 |
| 2 13/16 | UCP315-213D1 | | | | | | | | | | | | | UC315-213D1 |
| 2 7/8 | UCP315-214D1 | 3 15/16 | 14 31/32 | 11 13/32 | 3 15/16 | 1 1/16 | 1 9/16 | 1 3/8 | 7 25/32 | 4 11/32 | 3.2283 | 1.260 | 7/8 | UC315-214D1 |
| 2 15/16 | UCP315-215D1 | | | | | | | | | | | | | UC315-215D1 |
| 3 | UCP315-300D1 | | | | | | | | | | | | | UC315-300D1 |
| 80 | UCP316D1 | 106 | 400 | 300 | 110 | 27 | 40 | 40 | 210 | 110 | 86 | 34 | M22 | UC316D1 |
| 3 1/16 | UCP316-301D1 | | | | | | | | | | | | | UC316-301D1 |
| 3 1/8 | UCP316-302D1 | 4 11/64 | 15 3/4 | 11 13/16 | 4 11/32 | 1 1/16 | 1 9/16 | 1 9/16 | 8 9/32 | 4 11/32 | 3.3858 | 1.339 | 7/8 | UC316-302D1 |
| 3 3/16 | UCP316-303D1 | | | | | | | | | | | | | UC316-303D1 |
| 85 | UCP317D1 | 112 | 420 | 320 | 110 | 33 | 45 | 40 | 220 | 120 | 96 | 40 | M27 | UC317D1 |
| 3 1/4 | UCP317-304D1 | | | | | | | | | | | | | UC317-304D1 |
| 3 5/16 | UCP317-305D1 | 4 13/32 | 16 17/32 | 12 19/32 | 4 11/32 | 1 5/16 | 1 25/32 | 1 9/16 | 8 21/32 | 4 23/32 | 3.7795 | 1.575 | 1 | UC317-305D1 |
| 3 7/16 | UCP317-307D1 | | | | | | | | | | | | | UC317-307D1 |
| 90 | UCP318D1 | 118 | 430 | 330 | 110 | 33 | 45 | 45 | 235 | 120 | 96 | 40 | M27 | UC318D1 |
| 3 7/16 | UCP318-307D1 | 4 41/64 | 16 15/16 | 13 | 4 11/32 | 1 5/16 | 1 25/32 | 1 25/32 | 9 1/4 | 4 23/32 | 3.7795 | 1.575 | 1 | UC318-307D1 |
| 3 1/2 | UCP318-308D1 | | | | | | | | | | | | | UC318-308D1 |

Remarks: 1) These numbers indicate relubricatable type. If maintenance free type is needed, please order without suffix "D1".
Note: Please refer to page 36 for size of grease fitting.

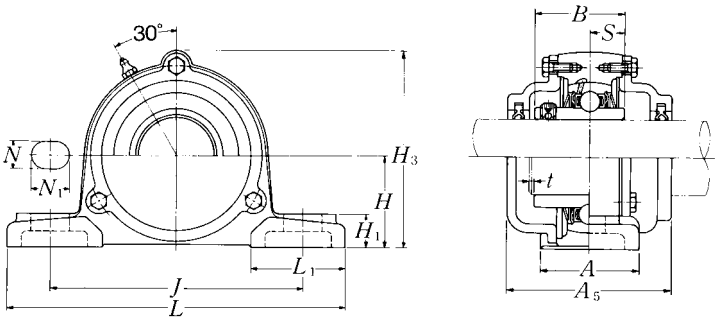


**Cast dust cover type**
Open end: **C-UCP···D1**
Closed end: **CM-UCP···D1**

| Housing [1] number | Unit number [1] cast dust cover type | Nominal dimensions mm | | | Nominal dimensions inch | | Mass of unit kg | Mass of unit lb |
|---|---|---|---|---|---|---|---|---|
| | | $t$ max. | $H_3$ | $A_5$ | $t$ max. | $H_3$ | UCP | C(CM) |
| P312D1 | C(CM)-UCP312D1 | 4 | 179 | 135 | 5/32 | 7 1/16 | 9.4 | 11 |
| P312D1 | C(CM)-UCP312-204D1 | | | | | | | |
| P312D1 | C(CM)-UCP312-205D1 | | | | | | | |
| P312D1 | C(CM)-UCP312-206D1 | | | | | | 21 | 24 |
| P312D1 | C(CM)-UCP312-207D1 | | | | | | | |
| P313D1 | C(CM)-UCP313D1 | 4 | 190 | 140 | 5/32 | 7 15/32 | 10 | 12 |
| P313D1 | C(CM)-UCP313-208D1 | | | | | | 22 | 26 |
| P313D1 | C(CM)-UCP313-209D1 | | | | | | | |
| P314D1 | C(CM)-UCP314D1 | 4 | 200 | 140 | 5/32 | 7 7/8 | 12 | 14 |
| P314D1 | C(CM)-UCP314-210D1 | | | | | | | |
| P314D1 | C(CM)-UCP314-211D1 | | | | | | 26 | 31 |
| P314D1 | C(CM)-UCP314-212D1 | | | | | | | |
| P315D1 | C(CM)-UCP315D1 | 4 | 210 | 150 | 5/32 | 8 9/32 | 14 | 17 |
| P315D1 | C(CM)-UCP315-213D1 | | | | | | | |
| P315D1 | C(CM)-UCP315-214D1 | | | | | | 31 | 37 |
| P315D1 | C(CM)-UCP315-215D1 | | | | | | | |
| P315D1 | C(CM)-UCP315-300D1 | | | | | | | |
| P316D1 | C(CM)-UCP316D1 | 4 | 221 | 155 | 5/32 | 8 11/16 | 17 | 21 |
| P316D1 | C(CM)-UCP316-301D1 | | | | | | | |
| P316D1 | C(CM)-UCP316-302D1 | | | | | | 37 | 46 |
| P316D1 | C(CM)-UCP316-303D1 | | | | | | | |
| P317D1 | C(CM)-UCP317D1 | 5 | 235 | 170 | 13/64 | 9 1/4 | 19 | 24 |
| P317D1 | C(CM)-UCP317-304D1 | | | | | | | |
| P317D1 | C(CM)-UCP317-305D1 | | | | | | 42 | 53 |
| P317D1 | C(CM)-UCP317-307D1 | | | | | | | |
| P318D1 | C(CM)-UCP318D1 | 5 | 246 | 170 | 13/64 | 9 11/16 | 22 | 27 |
| P318D1 | C(CM)-UCP318-307D1 | | | | | | 49 | 60 |
| P318D1 | C(CM)-UCP318-308D1 | | | | | | | |

## Pillow blocks cast housing
## Set screw type

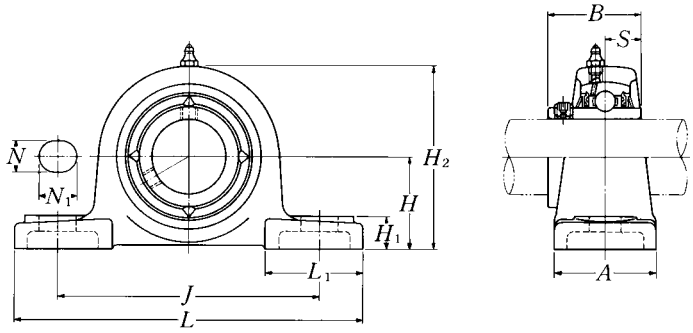


| Shaft dia. mm / inch | Unit number [1] | Nominal dimensions mm / inch H | L | J | A | N | N1 | H1 | H2 | L1 | B | S | Bolt size mm / inch | Bearing number |
|---|---|---|---|---|---|---|---|---|---|---|---|---|---|---|
| **95** | **UCP319D1** | 125 | 470 | 360 | 120 | 36 | 50 | 45 | 250 | 125 | 103 | 41 | M30 | UC319D1 |
| **3 5/8** | **UCP319-310D1** | | | | | | | | | | | | | UC319-310D1 |
| **3 11/16** | **UCP319-311D1** | 4 59/64 | 18 1/2 | 14 3/16 | 4 23/32 | 1 13/32 | 1 31/32 | 1 25/32 | 9 27/32 | 4 29/32 | 4.0551 | 1.614 | 1 1/8 | UC319-311D1 |
| **3 3/4** | **UCP319-312D1** | | | | | | | | | | | | | UC319-312D1 |
| **100** | **UCP320D1** | 140 | 490 | 380 | 120 | 36 | 50 | 50 | 275 | 130 | 108 | 42 | M30 | UC320D1 |
| **3 13/16** | **UCP320-313D1** | | | | | | | | | | | | | UC320-313D1 |
| **3 7/8** | **UCP320-314D1** | 5 33/64 | 19 9/32 | 14 31/32 | 4 23/32 | 1 13/32 | 1 31/32 | 1 31/32 | 10 13/16 | 5 1/8 | 4.2520 | 1.654 | 1 1/8 | UC320-314D1 |
| **3 15/16** | **UCP320-315D1** | | | | | | | | | | | | | UC320-315D1 |
| **4** | **UCP320-400D1** | | | | | | | | | | | | | UC320-400D1 |
| **105** | **UCP321D1** | 140 | 490 | 380 | 120 | 36 | 50 | 50 | 280 | 130 | 112 | 44 | M30 | UC321D1 |
| **110** | **UCP322D1** | 150 | 520 | 400 | 140 | 40 | 55 | 55 | 300 | 135 | 117 | 46 | M33 | UC322D1 |
| **120** | **UCP324D1** | 160 | 570 | 450 | 140 | 40 | 55 | 65 | 320 | 140 | 126 | 51 | M33 | UC324D1 |
| **130** | **UCP326D1** | 180 | 600 | 480 | 140 | 40 | 55 | 75 | 355 | 140 | 135 | 54 | M33 | UC326D1 |
| **140** | **UCP328D1** | 200 | 620 | 500 | 140 | 40 | 55 | 75 | 390 | 140 | 145 | 59 | M33 | UC328D1 |

Remarks: 1) These numbers indicate relubricatable type. If maintenance free type is needed, please order without suffix "D1".
Note: Please refer to page 36 for size of grease fitting.

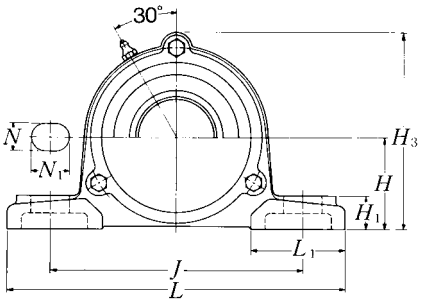


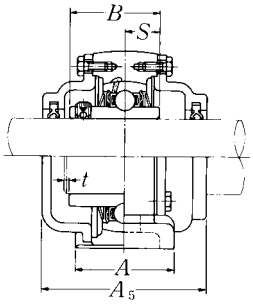


**Cast dust cover type**
Open end: **C-UCP···D1**
Closed end: **CM-UCP···D1**

| Housing [1] number | Unit number [1] cast dust cover type | Nominal dimensions | | | Mass of unit | |
|---|---|---|---|---|---|---|
| | | mm | | inch | kg | lb |
| | | $t$ max. | $H_3$ | $A_5$ | UCP | C(CM) |
| P319D1 | **C(CM)-UCP319D1** | 5 | 258 | 180 | 26 | 32 |
| P319D1 | **C(CM)-UCP319-310D1** | | | | | |
| P319D1 | **C(CM)-UCP319-311D1** | 13/64 | 10 5/32 | 7 3/32 | 57 | 71 |
| P319D1 | **C(CM)-UCP319-312D1** | | | | | |
| P320D1 | **C(CM)-UCP320D1** | 5 | 283 | 190 | 33 | 39 |
| P320D1 | **C(CM)-UCP320-313D1** | | | | | |
| P320D1 | **C(CM)-UCP320-314D1** | 13/64 | 11 5/32 | 7 15/32 | 73 | 86 |
| P320D1 | **C(CM)-UCP320-315D1** | | | | | |
| P320D1 | **C(CM)-UCP320-400D1** | | | | | |
| P321D1 | **C(CM)-UCP321D1** | 5 | 290 | 195 | 35 | 42 |
| P322D1 | **C(CM)-UCP322D1** | 5 | 313 | 200 | 43 | 52 |
| P324D1 | **C(CM)-UCP324D1** | 5 | 335 | 215 | 50 | 67 |
| P326D1 | **C(CM)-UCP326D1** | 6 | 375 | 225 | 69 | 83 |
| P328D1 | **C(CM)-UCP328D1** | 6 | 407 | 235 | 84 | 99 |

## Pillow blocks cast housing
## Set screw type

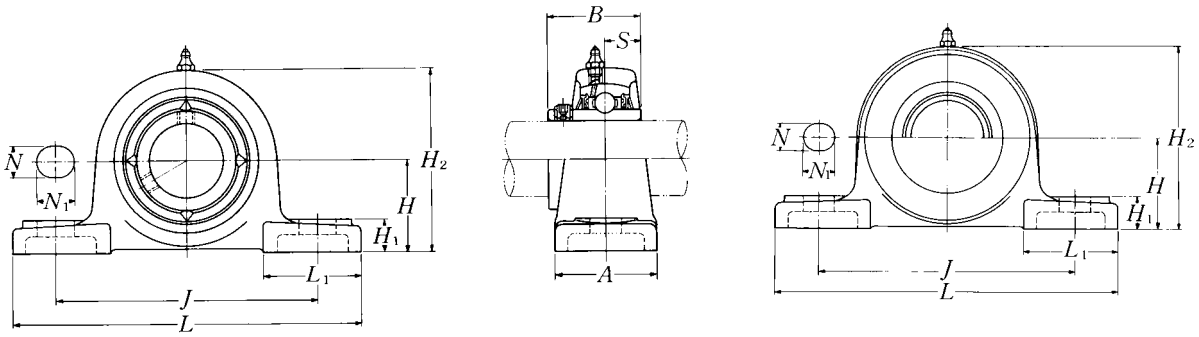


**Pressed steel dust cover type**
Open end: **S-UCPX···D1**
Closed end: **SM-UCPX···D1**

| Shaft dia. mm / inch | Unit number [1] | Nominal dimensions mm / inch H | L | J | A | N | N1 | H1 | H2 | L1 | B | S | Bolt size mm / inch | Bearing number |
|---|---|---|---|---|---|---|---|---|---|---|---|---|---|---|
| 25 | UCPX05D1 | 44.4 | 159 | 119 | 51 | 17 | 20 | 18 | 85 | 50 | 38.1 | 15.9 | M14 | UCX05D1 |
| 13/16 | UCPX05-013D1 | | | | | | | | | | | | | UCX05-013D1 |
| 7/8 | UCPX05-014D1 | 1 3/4 | 6 1/4 | 4 11/16 | 2 | 21/32 | 25/32 | 23/32 | 3 11/32 | 1 31/32 | 1.5000 | 0.626 | 1/2 | UCX05-014D1 |
| 15/16 | UCPX05-015D1 | | | | | | | | | | | | | UCX05-015D1 |
| 1 | UCPX05-100D1 | | | | | | | | | | | | | UCX05-100D1 |
| 30 | UCPX06D1 | 47.6 | 175 | 127 | 57 | 17 | 20 | 20 | 93 | 54 | 42.9 | 17.5 | M14 | UCX06D1 |
| 1 1/16 | UCPX06-101D1 | | | | | | | | | | | | | UCX06-101D1 |
| 1 1/8 | UCPX06-102D1 | 1 7/8 | 6 7/8 | 5 | 2 1/4 | 21/32 | 25/32 | 25/32 | 3 21/32 | 2 1/8 | 1.6890 | 0.689 | 1/2 | UCX06-102D1 |
| 1 3/16 | UCPX06-103D1 | | | | | | | | | | | | | UCX06-103D1 |
| 1 1/4 | UCPX06-104D1 | | | | | | | | | | | | | UC207-104D1 |
| 35 | UCPX07D1 | 54 | 203 | 144 | 57 | 17 | 20 | 21 | 105 | 60 | 49.2 | 19 | M14 | UCX07D1 |
| 1 5/16 | UCPX07-105D1 | | | | | | | | | | | | | UCX07-105D1 |
| 1 3/8 | UCPX07-106D1 | 2 1/8 | 8 | 5 21/32 | 2 1/4 | 21/32 | 25/32 | 13/16 | 4 1/8 | 2 3/8 | 1.9370 | 0.748 | 1/2 | UCX07-106D1 |
| 1 7/16 | UCPX07-107D1 | | | | | | | | | | | | | UCX07-107D1 |
| 40 | UCPX08D1 | 58.7 | 222 | 156 | 67 | 20 | 23 | 26 | 111 | 65 | 49.2 | 19 | M16 | UCX08D1 |
| 1 1/2 | UCPX08-108D1 | 2 5/16 | 8 3/4 | 6 5/32 | 2 5/8 | 25/32 | 29/32 | 1 1/32 | 4 3/8 | 2 9/16 | 1.9370 | 0.748 | 5/8 | UCX08-108D1 |
| 1 9/16 | UCPX08-109D1 | | | | | | | | | | | | | UCX08-109D1 |
| 45 | UCPX09D1 | 58.7 | 222 | 156 | 67 | 20 | 23 | 26 | 116 | 65 | 51.6 | 19 | M16 | UCX09D1 |
| 1 5/8 | UCPX09-110D1 | | | | | | | | | | | | | UCX09-110D1 |
| 1 11/16 | UCPX09-111D1 | 2 5/16 | 8 3/4 | 6 5/32 | 2 5/8 | 25/32 | 29/32 | 1 1/32 | 4 9/16 | 2 9/16 | 2.0315 | 0.748 | 5/8 | UCX09-111D1 |
| 1 3/4 | UCPX09-112D1 | | | | | | | | | | | | | UCX09-112D1 |
| 1 13/16 | UCPX09-113D1 | | | | | | | | | | | | | UC210-113D1 |
| 50 | UCPX10D1 | 63.5 | 241 | 171 | 73 | 20 | 23 | 27 | 126 | 70 | 55.6 | 22.2 | M16 | UCX10D1 |
| 1 7/8 | UCPX10-114D1 | | | | | | | | | | | | | UCX10-114D1 |
| 1 15/16 | UCPX10-115D1 | 2 1/2 | 9 1/2 | 6 23/32 | 2 7/8 | 25/32 | 29/32 | 1 1/16 | 4 31/32 | 2 3/4 | 2.1890 | 0.874 | 5/8 | UCX10-115D1 |
| 2 | UCPX10-200D1 | | | | | | | | | | | | | UC211-200D1 |
| 55 | UCPX11D1 | 69.8 | 260 | 184 | 79 | 25 | 28 | 30 | 137 | 75 | 65.1 | 25.4 | M20 | UCX11D1 |
| 2 1/16 | UCPX11-201D1 | | | | | | | | | | | | | UCX11-201D1 |
| 2 1/8 | UCPX11-202D1 | | | | | | | | | | | | | UCX11-202D1 |
| 2 3/16 | UCPX11-203D1 | 2 3/4 | 10 1/4 | 7 1/4 | 3 1/8 | 31/32 | 1 3/32 | 1 3/16 | 5 13/32 | 2 15/16 | 2.5630 | 1.000 | 3/4 | UCX11-203D1 |
| 2 1/4 | UCPX11-204D1 | | | | | | | | | | | | | UC212-204D1 |
| 2 5/16 | UCPX11-205D1 | | | | | | | | | | | | | UC212-205D1 |

Remarks: 1) These numbers indicate relubricatable type. If maintenance free type is needed, please order without suffix "D1".
Note: Please refer to page 36 for size of grease fitting.

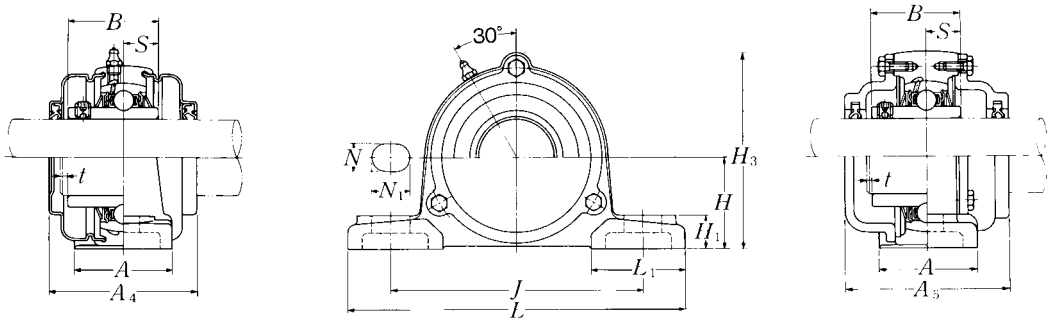


**Cast dust cover type**
Open end: **C-UCPX···D1**
Closed end: **CM-UCPX···D1**

| Housing 1) number | Unit number 1) pressed steel dust cover type | Unit number 1) cast dust cover type | Nominal dimensions | | | | Mass of unit | | |
|---|---|---|---|---|---|---|---|---|---|
| | | | mm | | inch | | kg | | lb |
| | | | $t$ max. | $A_4$ | $H_3$ | $A_5$ | UCPX | S(SM) | C(CM) |
| PX05D1 | S(SM)-UCPX05D1 | C(CM)-UCPX05D1 | 2 | 62 | 89 | 75 | 1.4 | 1.5 | 1.8 |
| PX05D1 | S(SM)-UCPX05-013D1 | C(CM)-UCPX05-013D1 | | | | | | | |
| PX05D1 | S(SM)-UCPX05-014D1 | C(CM)-UCPX05-014D1 | 5/64 | 2 7/16 | 3 1/2 | 2 15/16 | 3.1 | 3.3 | 4.0 |
| PX05D1 | S(SM)-UCPX05-015D1 | C(CM)-UCPX05-015D1 | | | | | | | |
| PX05D1 | S(SM)-UCPX05-100D1 | C(CM)-UCPX05-100D1 | | | | | | | |
| PX06D1 | S(SM)-UCPX06D1 | C(CM)-UCPX06D1 | 2 | 72 | 99 | 80 | 1.9 | 2.0 | 2.4 |
| PX06D1 | S(SM)-UCPX06-101D1 | C(CM)-UCPX06-101D1 | | | | | | | |
| PX06D1 | S(SM)-UCPX06-102D1 | C(CM)-UCPX06-102D1 | 5/64 | 2 27/32 | 3 29/32 | 3 5/32 | 4.2 | 4.4 | 5.3 |
| PX06D1 | S(SM)-UCPX06-103D1 | C(CM)-UCPX06-103D1 | | | | | | | |
| PX06D1 | S(SM)-UCPX06-104D1 | C(CM)-UCPX06-104D1 | | | | | | | |
| PX07D1 | S(SM)-UCPX07D1 | C(CM)-UCPX07D1 | 3 | 82 | 110 | 90 | 2.4 | 2.6 | 3.3 |
| PX07D1 | S(SM)-UCPX07-105D1 | C(CM)-UCPX07-105D1 | | | | | | | |
| PX07D1 | S(SM)-UCPX07-106D1 | C(CM)-UCPX07-106D1 | 1/8 | 3 7/32 | 4 11/32 | 3 17/32 | 5.3 | 5.7 | 7.3 |
| PX07D1 | S(SM)-UCPX07-107D1 | C(CM)-UCPX07-107D1 | | | | | | | |
| PX08D1 | S(SM)-UCPX08D1 | C(CM)-UCPX08D1 | 3 | 82 | 118 | 95 | 2.9 | 3.1 | 3.8 |
| PX08D1 | S(SM)-UCPX08-108D1 | C(CM)-UCPX08-108D1 | 1/8 | 3 7/32 | 4 41/64 | 3 3/4 | 6.4 | 6.8 | 8.4 |
| PX08D1 | S(SM)-UCPX08-109D1 | C(CM)-UCPX08-109D1 | | | | | | | |
| PX09D1 | S(SM)-UCPX09D1 | C(CM)-UCPX09D1 | 3 | 87 | 120 | 100 | 3.2 | 3.5 | 4.2 |
| PX09D1 | S(SM)-UCPX09-110D1 | C(CM)-UCPX09-110D1 | | | | | | | |
| PX09D1 | S(SM)-UCPX09-111D1 | C(CM)-UCPX09-111D1 | 1/8 | 3 7/16 | 4 23/32 | 3 15/16 | 7.1 | 7.7 | 9.3 |
| PX09D1 | S(SM)-UCPX09-112D1 | C(CM)-UCPX09-112D1 | | | | | | | |
| PX09D1 | S(SM)-UCPX09-113D1 | C(CM)-UCPX09-113D1 | | | | | | | |
| PX10D1 | S(SM)-UCPX10D1 | C(CM)-UCPX10D1 | 3 | 92 | 130 | 100 | 4.1 | 4.5 | 5.4 |
| PX10D1 | S(SM)-UCPX10-114D1 | C(CM)-UCPX10-114D1 | | | | | | | |
| PX10D1 | S(SM)-UCPX10-115D1 | C(CM)-UCPX10-115D1 | 1/8 | 3 5/8 | 5 1/8 | 3 15/16 | 9.0 | 9.9 | 12 |
| PX10D1 | S(SM)-UCPX10-200D1 | C(CM)-UCPX10-200D1 | | | | | | | |
| PX11D1 | S(SM)-UCPX11D1 | C(CM)-UCPX11D1 | 4 | 102 | 144 | 115 | 5.4 | 5.8 | 6.9 |
| PX11D1 | S(SM)-UCPX11-201D1 | C(CM)-UCPX11-201D1 | | | | | | | |
| PX11D1 | S(SM)-UCPX11-202D1 | C(CM)-UCPX11-202D1 | | | | | | | |
| PX11D1 | S(SM)-UCPX11-203D1 | C(CM)-UCPX11-203D1 | 5/32 | 4 1/32 | 5 21/32 | 4 17/32 | 12 | 13 | 15 |
| PX11D1 | S(SM)-UCPX11-204D1 | C(CM)-UCPX11-204D1 | | | | | | | |
| PX11D1 | S(SM)-UCPX11-205D1 | C(CM)-UCPX11-205D1 | | | | | | | |

## Pillow blocks cast housing
## Set screw type

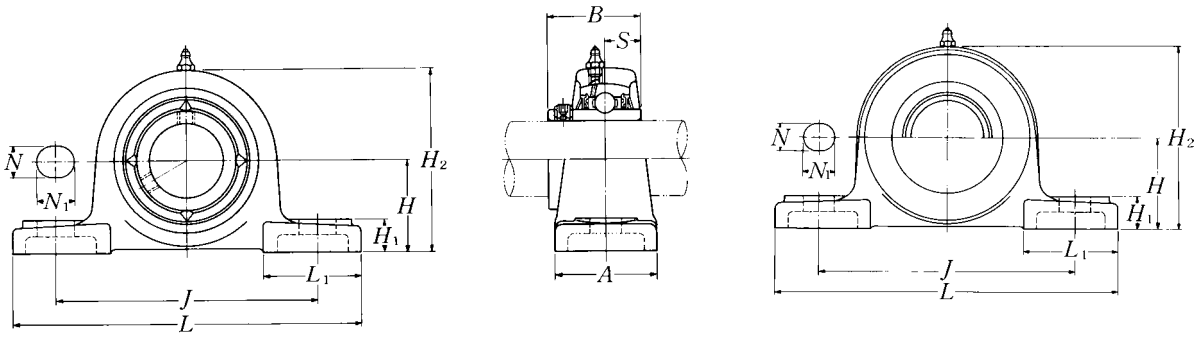


**Pressed steel dust cover type**
Open end: **S-UCPX···D1**
Closed end: **SM-UCPX···D1**

| Shaft dia. mm / inch | Unit number [1] | Nominal dimensions mm / inch H | L | J | A | N | N1 | H1 | H2 | L1 | B | S | Bolt size mm / inch | Bearing number |
|---|---|---|---|---|---|---|---|---|---|---|---|---|---|---|
| 60 | UCPX12D1 | 76.2 | 286 | 203 | 83 | 25 | 28 | 33 | 151 | 80 | 65.1 | 25.4 | M20 | UCX12D1 |
| 2 3/8 | UCPX12-206D1 | 3 | 11 1/4 | 8 | 3 9/32 | 31/32 | 1 3/32 | 1 5/16 | 5 15/16 | 3 5/32 | 2.5630 | 1.000 | 3/4 | UCX12-206D1 |
| 2 7/16 | UCPX12-207D1 | | | | | | | | | | | | | UCX12-207D1 |
| 65 | UCPX13D1 | 76.2 | 286 | 203 | 83 | 25 | 28 | 33 | 154 | 80 | 74.6 | 30.2 | M20 | UCX13D1 |
| 2 1/2 | UCPX13-208D1 | 3 | 11 1/4 | 8 | 3 9/32 | 31/32 | 1 3/32 | 1 5/16 | 6 1/16 | 3 5/32 | 2.9370 | 1.189 | 3/4 | UCX13-208D1 |
| 2 9/16 | UCPX13-209D1 | | | | | | | | | | | | | UCX13-209D1 |
| 70 | UCPX14D1 | 88.9 | 330 | 229 | 89 | 27 | 30 | 35 | 170 | 95 | 77.8 | 33.3 | M22 | UCX14D1 |
| 2 5/8 | UCPX14-210D1 | | | | | | | | | | | | | UCX14-210D1 |
| 2 11/16 | UCPX14-211D1 | 3 1/2 | 13 | 9 1/32 | 3 1/2 | 1 1/16 | 1 3/16 | 1 3/8 | 6 11/16 | 3 3/4 | 3.0630 | 1.311 | 7/8 | UCX14-211D1 |
| 2 3/4 | UCPX14-212D1 | | | | | | | | | | | | | UCX14-212D1 |
| 75 | UCPX15D1 | 88.9 | 330 | 229 | 89 | 27 | 30 | 35 | 175 | 95 | 82.6 | 33.3 | M22 | UCX15D1 |
| 2 13/16 | UCPX15-213D1 | | | | | | | | | | | | | UCX15-213D1 |
| 2 7/8 | UCPX15-214D1 | 3 1/2 | 13 | 9 1/32 | 3 1/2 | 1 1/16 | 1 3/16 | 1 3/8 | 6 7/8 | 3 3/4 | 3.2520 | 1.311 | 7/8 | UCX15-214D1 |
| 2 15/16 | UCPX15-215D1 | | | | | | | | | | | | | UCX15-215D1 |
| 3 | UCPX15-300D1 | | | | | | | | | | | | | UCX15-300D1 |
| 80 | UCPX16D1 | 101.6 | 381 | 283 | 102 | 27 | 30 | 40 | 194 | 110 | 85.7 | 34.1 | M22 | UCX16D1 |
| 3 1/16 | UCPX16-301D1 | | | | | | | | | | | | | UCX16-301D1 |
| 3 1/8 | UCPX16-302D1 | 4 | 15 | 11 5/32 | 4 1/32 | 1 1/16 | 1 3/16 | 1 9/16 | 7 5/8 | 4 11/32 | 3.3740 | 1.343 | 7/8 | UCX16-302D1 |
| 3 3/16 | UCPX16-303D1 | | | | | | | | | | | | | UCX16-303D1 |
| 3 1/4 | UCPX16-304D1 | | | | | | | | | | | | | UC217-304D1 |
| 85 | UCPX17D1 | 101.6 | 381 | 283 | 102 | 27 | 30 | 40 | 200 | 110 | 96 | 39.7 | M22 | UCX17D1 |
| 3 5/16 | UCPX17-305D1 | 4 | 15 | 11 5/32 | 4 1/32 | 1 1/16 | 1 3/16 | 1 9/16 | 7 7/8 | 4 11/32 | 3.7795 | 1.563 | 7/8 | UCX17-305D1 |
| 3 7/16 | UCPX17-307D1 | | | | | | | | | | | | | UCX17-307D1 |
| 90 | UCPX18D1 | 101.6 | 381 | 283 | 111 | 27 | 30 | 40 | 206 | 110 | 104 | 42.9 | M22 | UCX18D1 |
| 3 7/16 | UCPX18-307D1 | 4 | 15 | 11 5/32 | 4 3/8 | 1 1/16 | 1 3/16 | 1 9/16 | 8 1/8 | 4 11/32 | 4.0945 | 1.689 | 7/8 | UCX18-307D1 |
| 3 1/2 | UCPX18-308D1 | | | | | | | | | | | | | UCX18-308D1 |
| 100 | UCPX20D1 | 127 | 432 | 337 | 121 | 33 | 36 | 45 | 244 | 125 | 117.5 | 49.2 | M27 | UCX20D1 |
| 3 13/16 | UCPX20-313D1 | | | | | | | | | | | | | UCX20-313D1 |
| 3 7/8 | UCPX20-314D1 | 5 | 17 | 13 9/32 | 4 3/4 | 1 5/16 | 1 13/32 | 1 25/32 | 9 19/32 | 4 29/32 | 4.6260 | 1.937 | 1 | UCX20-314D1 |
| 3 15/16 | UCPX20-315D1 | | | | | | | | | | | | | UCX20-315D1 |
| 4 | UCPX20-400D1 | | | | | | | | | | | | | UCX20-400D1 |

Remarks: 1) These numbers indicate relubricatable type. If maintenance free type is needed, please order without suffix "D1".
Note: Please refer to page 36 for size of grease fitting.

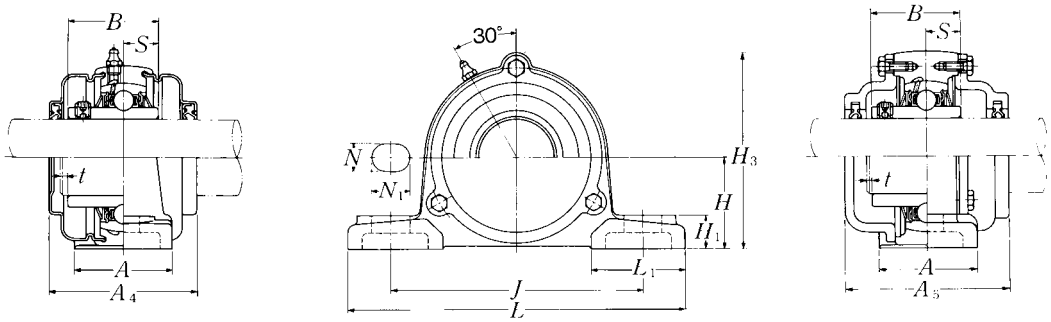


**Cast dust cover type**
Open end: **C-UCPX···D1**
Closed end: **CM-UCPX···D1**

| Housing 1) number | Unit number 1) pressed steel dust cover type | Unit number 1) cast dust cover type | Nominal dimensions | | | | Mass of unit | | |
|---|---|---|---|---|---|---|---|---|---|
| | | | mm | | inch | | kg | | lb |
| | | | $t$ max. | $A_4$ | $H_3$ | $A_5$ | UCPX | S(SM) | C(CM) |
| PX12D1 | S(SM)-UCPX12D1 | C(CM)-UCPX12D1 | 4 | 107 | 155 | 120 | 6.8 | 7.3 | 8.6 |
| PX12D1 | S(SM)-UCPX12-206D1 | C(CM)-UCPX12-206D1 | 5/32 | 4 7/32 | 6 3/32 | 4 23/32 | 15 | 16 | 19 |
| PX12D1 | S(SM)-UCPX12-207D1 | C(CM)-UCPX12-207D1 | | | | | | | |
| PX13D1 | — | C(CM)-UCPX13D1 | 4 | — | 159 | 135 | 7.2 | — | 9.4 |
| PX13D1 | | C(CM)-UCPX13-208D1 | 5/32 | — | 6 1/4 | 5 5/16 | 16 | — | 21 |
| PX13D1 | | C(CM)-UCPX13-209D1 | | | | | | | |
| PX14D1 | — | C(CM)-UCPX14D1 | 4 | — | 175 | 135 | 9.3 | — | 12 |
| PX14D1 | | C(CM)-UCPX14-210D1 | | | | | | | |
| PX14D1 | | C(CM)-UCPX14-211D1 | 5/32 | — | 6 7/8 | 5 5/16 | 21 | — | 26 |
| PX14D1 | | C(CM)-UCPX14-212D1 | | | | | | | |
| PX15D1 | — | C(CM)-UCPX15D1 | 4 | — | 181 | 145 | 10 | — | 13 |
| PX15D1 | | C(CM)-UCPX15-213D1 | | | | | | | |
| PX15D1 | | C(CM)-UCPX15-214D1 | 5/32 | — | 7 1/8 | 5 23/32 | 22 | — | 29 |
| PX15D1 | | C(CM)-UCPX15-215D1 | | | | | | | |
| PX15D1 | | C(CM)-UCPX15-300D1 | | | | | | | |
| PX16D1 | — | C(CM)-UCPX16D1 | 4 | — | 198 | 155 | 14 | — | 17 |
| PX16D1 | | C(CM)-UCPX16-301D1 | | | | | | | |
| PX16D1 | | C(CM)-UCPX16-302D1 | 5/32 | — | 7 25/32 | 6 3/32 | 31 | — | 37 |
| PX16D1 | | C(CM)-UCPX16-303D1 | | | | | | | |
| PX16D1 | | C(CM)-UCPX16-304D1 | | | | | | | |
| PX17D1 | — | C(CM)-UCPX17D1 | 5 | — | 204 | 165 | 15 | — | 19 |
| PX17D1 | | C(CM)-UCPX17-305D1 | 13/64 | — | 8 1/32 | 6 1/2 | 33 | — | 42 |
| PX17D1 | | C(CM)-UCPX17-307D1 | | | | | | | |
| PX18D1 | — | C(CM)-UCPX18D1 | 5 | — | 208 | 180 | 16 | — | 21 |
| PX18D1 | | C(CM)-UCPX18-307D1 | 13/64 | — | 8 3/16 | 7 3/32 | 35 | — | 46 |
| PX18D1 | | C(CM)-UCPX18-308D1 | | | | | | | |
| PX20D1 | — | C(CM)-UCPX20D1 | 5 | — | 244 | 195 | 25 | — | 29 |
| PX20D1 | | C(CM)-UCPX20-313D1 | | | | | | | |
| PX20D1 | | C(CM)-UCPX20-314D1 | 13/64 | — | 9 39/64 | 7 11/16 | 55 | — | 64 |
| PX20D1 | | C(CM)-UCPX20-315D1 | | | | | | | |
| PX20D1 | | C(CM)-UCPX20-400D1 | | | | | | | |

## Pillow blocks cast housing low center height
## Set screw type

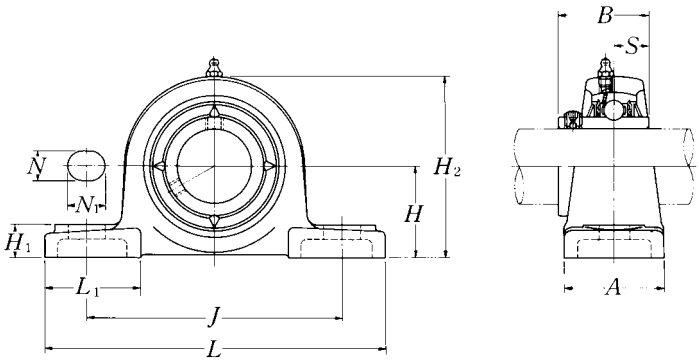


| Shaft dia. mm / inch | Unit number 1) 2) 3) | Nominal dimensions mm / inch H | L | J | A | N | N1 | H1 | H2 | L1 | B | S | Bolt size mm / inch | Bearing number |
|---|---|---|---|---|---|---|---|---|---|---|---|---|---|---|
| 20 | UCPL204D1 | 31.75 | 127 | 95 | 38 | 13 | 16 | 14 | 64 | 42 | 31 | 12.7 | M10 | UC204D1 |
| 3/4 | UCPL204-012D1 | 1 1/4 | 5 | 3 3/4 | 1 1/2 | 1/2 | 5/8 | 9/16 | 2 17/32 | 1 21/32 | 1.2205 | 0.500 | 3/8 | UC204-012D1 |
| 25 | UCPL205D1 | 33.34 | 140 | 105 | 38 | 13 | 16 | 15 | 68 | 42 | 34.1 | 14.3 | M10 | UC205D1 |
| 13/16 | UCPL205-013D1 | | | | | | | | | | | | | UC205-013D1 |
| 7/8 | UCPL205-014D1 | 1 5/16 | 5 1/2 | 4 1/8 | 1 1/2 | 1/2 | 5/8 | 19/32 | 2 11/16 | 1 21/32 | 1.3425 | 0.563 | 3/8 | UC205-014D1 |
| 15/16 | UCPL205-015D1 | | | | | | | | | | | | | UC205-015D1 |
| 1 | UCPL205-100D1 | | | | | | | | | | | | | UC205-100D1 |
| 30 | UCPL206D1 | 39.69 | 165 | 121 | 48 | 17 | 20 | 17 | 80 | 54 | 38.1 | 15.9 | M14 | UC206D1 |
| 1 1/16 | UCPL206-101D1 | | | | | | | | | | | | | UC206-101D1 |
| 1 1/8 | UCPL206-102D1 | 1 9/16 | 6 1/2 | 4 3/4 | 1 7/8 | 21/32 | 25/32 | 21/32 | 3 5/32 | 2 1/8 | 1.5000 | 0.626 | 1/2 | UC206-102D1 |
| 1 3/16 | UCPL206-103D1 | | | | | | | | | | | | | UC206-103D1 |
| 1 1/4 | UCPL206-104D1 | | | | | | | | | | | | | UC206-104D1 |
| 35 | UCPL207D1 | 46.04 | 167 | 127 | 48 | 17 | 20 | 18 | 91 | 54 | 42.9 | 17.5 | M14 | UC207D1 |
| 1 1/4 | UCPL207-104D1 | | | | | | | | | | | | | UC207-104D1 |
| 1 5/16 | UCPL207-105D1 | 1 13/16 | 6 9/16 | 5 | 1 7/8 | 21/32 | 25/32 | 23/32 | 3 19/32 | 2 1/8 | 1.6890 | 0.689 | 1/2 | UC207-105D1 |
| 1 3/8 | UCPL207-106D1 | | | | | | | | | | | | | UC207-106D1 |
| 1 7/16 | UCPL207-107D1 | | | | | | | | | | | | | UC207-107D1 |
| 45 | UCPL209D1 | 52.39 | 190 | 146 | 54 | 17 | 20 | 20 | 104 | 60 | 49.2 | 19 | M14 | UC209D1 |
| 1 5/8 | UCPL209-110D1 | | | | | | | | | | | | | UC209-110D1 |
| 1 11/16 | UCPL209-111D1 | 2 1/16 | 7 15/32 | 5 3/4 | 2 1/8 | 21/32 | 25/32 | 25/32 | 4 3/32 | 2 3/8 | 1.9370 | 0.748 | 1/2 | UC209-111D1 |
| 1 3/4 | UCPL209-112D1 | | | | | | | | | | | | | UC209-112D1 |
| 50 | UCPL210D1 | 55.56 | 206 | 159 | 60 | 20 | 23 | 21 | 112 | 65 | 51.6 | 19 | M16 | UC210D1 |
| 1 13/16 | UCPL210-113D1 | | | | | | | | | | | | | UC210-113D1 |
| 1 7/8 | UCPL210-114D1 | 2 3/16 | 8 1/8 | 6 1/4 | 2 3/8 | 25/32 | 29/32 | 13/16 | 4 13/32 | 2 9/16 | 2.0315 | 0.748 | 5/8 | UC210-114D1 |
| 1 15/16 | UCPL210-115D1 | | | | | | | | | | | | | UC210-115D1 |
| 2 | UCPL210-200D1 | | | | | | | | | | | | | UC210-200D1 |

Remarks: 1) These numbers indicate relubricatable type. If maintenance free type is needed, please order without suffix "D1".
2) UCPL204 and UCPL205 has solid bases.
3) UCPL208 has the same dimension as UCP208 shown in page 56.

Note: Please refer to page 36 for size of grease fitting.

| Housing [1] number | Mass of unit kg | lb |
|---|---|---|
| PL204D1 | 0.7 | |
| PL204D1 | | 1.5 |
| PL205D1 | 0.8 | |
| PL205D1 | | |
| PL205D1 | | 1.8 |
| PL205D1 | | |
| PL205D1 | | |
| PL206D1 | 1.3 | |
| PL206D1 | | |
| PL206D1 | | 2.9 |
| PL206D1 | | |
| PL206D1 | | |
| PL207D1 | 1.6 | |
| PL207D1 | | |
| PL207D1 | | 3.5 |
| PL207D1 | | |
| PL207D1 | | |
| PL209D1 | 2.2 | |
| PL209D1 | | |
| PL209D1 | | 4.9 |
| PL209D1 | | |
| PL210D1 | 2.8 | |
| PL210D1 | | |
| PL210D1 | | 6.2 |
| PL210D1 | | |
| PL210D1 | | |

## Pillow blocks cast housing low center height
## Set screw type

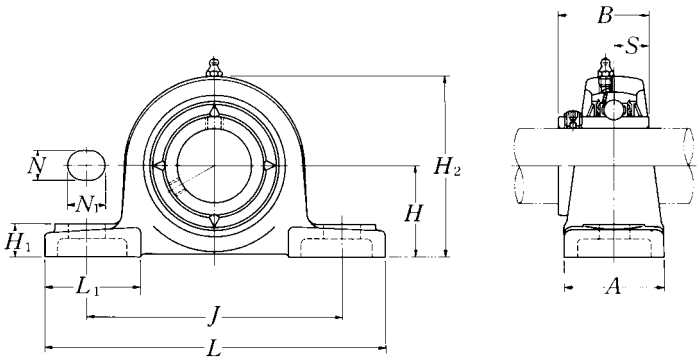


| Shaft dia. mm / inch | Unit number 1) 2) 3) | Nominal dimensions mm / inch H | L | J | A | N | N1 | H1 | H2 | L1 | B | S | Bolt size mm / inch | Bearing number |
|---|---|---|---|---|---|---|---|---|---|---|---|---|---|---|
| **55** | **UCPL211D1** | 61.91 | 219 | 171 | 60 | 20 | 23 | 23 | 124 | 65 | 55.6 | 22.2 | M16 | UC211D1 |
| **2** | **UCPL211-200D1** | | | | | | | | | | | | | UC211-200D1 |
| **2 1/16** | **UCPL211-201D1** | 2 7/16 | 8 5/8 | 6 23/32 | 2 3/8 | 25/32 | 29/32 | 29/32 | 4 7/8 | 2 9/16 | 2.1890 | 0.874 | 5/8 | UC211-201D1 |
| **2 1/8** | **UCPL211-202D1** | | | | | | | | | | | | | UC211-202D1 |
| **2 3/16** | **UCPL211-203D1** | | | | | | | | | | | | | UC211-203D1 |
| **60** | **UCPL212D1** | 68.26 | 241 | 184 | 70 | 20 | 23 | 25 | 136 | 70 | 65.1 | 25.4 | M16 | UC212D1 |
| **2 1/4** | **UCPL212-204D1** | | | | | | | | | | | | | UC212-204D1 |
| **2 5/16** | **UCPL212-205D1** | 2 11/16 | 9 1/2 | 7 1/4 | 2 3/4 | 25/32 | 29/32 | 31/32 | 5 11/32 | 2 3/4 | 2.5630 | 1.000 | 5/8 | UC212-205D1 |
| **2 3/8** | **UCPL212-206D1** | | | | | | | | | | | | | UC212-206D1 |
| **2 7/16** | **UCPL212-207D1** | | | | | | | | | | | | | UC212-207D1 |

Remarks: 1) These numbers indicate relubricatable type. If maintenance free type is needed, please order without suffix "D1".
2) UCPL204 and UCPL205 has solid bases.
3) UCPL208 has the same dimension as UCP208 shown in page 56.

Note: Please refer to page 36 for size of grease fitting.

| Housing [1)] number | Mass of unit kg lb |
|---|---|
| PL211D1 | 3.4 |
| PL211D1 | |
| PL211D1 | 7.5 |
| PL211D1 | |
| PL211D1 | |
| PL212D1 | 4.7 |
| PL212D1 | |
| PL212D1 | 10 |
| PL212D1 | |
| PL212D1 | |

## Pillow blocks (Steel series)
## Set screw type

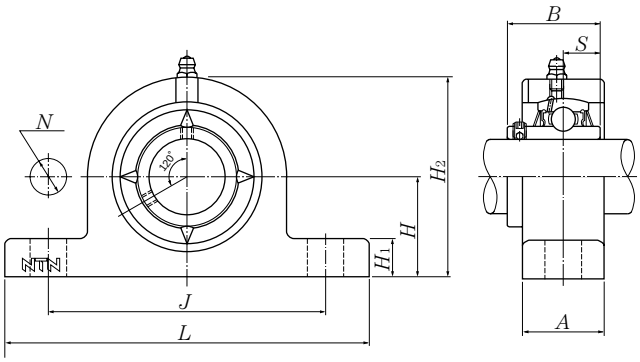


| Shaft dia. mm | Unit number [1] | Nominal dimensions mm | | | | | | | | | Bolt size mm | Bearing number |
|---|---|---|---|---|---|---|---|---|---|---|---|---|
| | | *H* | *L* | *J* | *A* | *N* | $H_1$ | $H_2$ | *B* | *S* | | |
| **12** | **UCPG201D1** | 30.2 | 127 | 95 | 25 | 12 | 14 | 62 | 31 | 12.7 | M10 | UC201D1 |
| **15** | **UCPG202D1** | 30.2 | 127 | 95 | 25 | 12 | 14 | 62 | 31 | 12.7 | M10 | UC202D1 |
| **17** | **UCPG203D1** | 30.2 | 127 | 95 | 25 | 12 | 14 | 62 | 31 | 12.7 | M10 | UC203D1 |
| **20** | **UCPG204D1** | 33.3 | 127 | 95 | 25 | 12 | 14 | 65 | 31 | 12.7 | M10 | UC204D1 |
| **25** | **UCPG205D1** | 36.5 | 140 | 105 | 30 | 12 | 15 | 71 | 34.1 | 14.3 | M10 | UC205D1 |
| **30** | **UCPG206D1** | 42.9 | 165 | 121 | 35 | 17 | 17 | 83 | 38.1 | 15.9 | M14 | UC206D1 |
| **35** | **UCPG207D1** | 47.6 | 167 | 127 | 35 | 17 | 18 | 93 | 42.9 | 17.5 | M14 | UC207D1 |
| **40** | **UCPG208D1** | 49.2 | 184 | 137 | 40 | 17 | 18 | 98 | 49.2 | 19 | M14 | UC208D1 |
| **45** | **UCPG209D1** | 54 | 190 | 146 | 40 | 17 | 20 | 106 | 49.2 | 19 | M14 | UC209D1 |
| **50** | **UCPG210D1** | 57.2 | 206 | 159 | 45 | 19 | 21 | 114 | 51.6 | 19 | M16 | UC210D1 |
| **55** | **UCPG211D1** | 63.5 | 219 | 171 | 45 | 19 | 23 | 126 | 55.6 | 22.2 | M16 | UC211D1 |
| **60** | **UCPG212D1** | 69.8 | 241 | 184 | 50 | 19 | 25 | 138 | 65.1 | 25.4 | M16 | UC212D1 |
| **65** | **UCPG213D1** | 76.2 | 265 | 203 | 50 | 24 | 27 | 151 | 65.1 | 25.4 | M20 | UC213D1 |
| **70** | **UCPG214D1** | 79.4 | 266 | 210 | 55 | 24 | 27 | 157 | 74.6 | 30.2 | M20 | UC214D1 |
| **75** | **UCPG215D1** | 82.6 | 275 | 217 | 55 | 24 | 28 | 163 | 77.8 | 33.3 | M20 | UC215D1 |
| **80** | **UCPG216D1** | 88.9 | 292 | 232 | 60 | 24 | 30 | 175 | 82.6 | 33.3 | M20 | UC216D1 |
| **85** | **UCPG217D1** | 95.2 | 310 | 247 | 60 | 24 | 32 | 187 | 85.7 | 34.1 | M20 | UC217D1 |
| **90** | **UCPG218D1** | 101.6 | 327 | 262 | 65 | 26 | 33 | 200 | 96 | 39.7 | M22 | UC218D1 |

Remark: 1) These numbers indicate relubricatable type. If maintenance free type is needed, please order without suffix "D1".
Note: Please refer to page 36 for size of grease fitting.

| Housing [1)] number | Mass of unit kg |
|---|---|
| PG203D1 | 0.7 |
| PG203D1 | 0.7 |
| PG203D1 | 0.7 |
| PG204D1 | 0.7 |
| PG205D1 | 1.0 |
| PG206D1 | 1.5 |
| PG207D1 | 1.7 |
| PG208D1 | 2.2 |
| PG209D1 | 2.4 |
| PG210D1 | 3.2 |
| PG211D1 | 3.9 |
| PG212D1 | 5.3 |
| PG213D1 | 6.5 |
| PG214D1 | 7.4 |
| PG215D1 | 8.1 |
| PG216D1 | 9.8 |
| PG217D1 | 11 |
| PG218D1 | 14 |

## Pillow blocks (Steel series)
## Set screw type

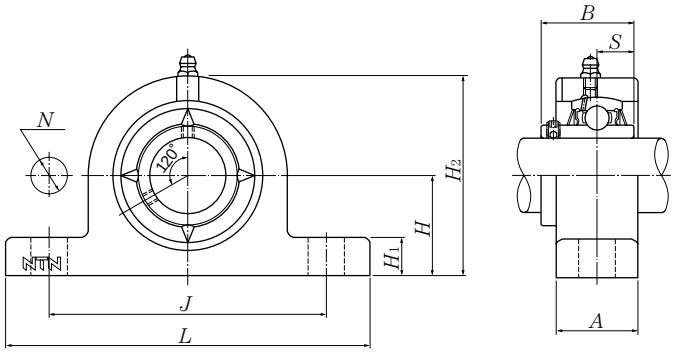


| Shaft dia. mm | Unit number [1] | Nominal dimensions mm | | | | | | | | | Bolt size mm | Bearing number |
|---|---|---|---|---|---|---|---|---|---|---|---|---|
| | | $H$ | $L$ | $J$ | $A$ | $N$ | $H_1$ | $H_2$ | $B$ | $S$ | | |
| **25** | **UCPG305D1** | 45 | 175 | 132 | 35 | 17 | 15 | 85 | 38 | 15 | M14 | UC305D1 |
| **30** | **UCPG306D1** | 50 | 180 | 140 | 35 | 17 | 18 | 95 | 43 | 17 | M14 | UC306D1 |
| **35** | **UCPG307D1** | 56 | 210 | 160 | 40 | 17 | 20 | 106 | 48 | 19 | M14 | UC307D1 |
| **40** | **UCPG308D1** | 60 | 220 | 170 | 45 | 17 | 22 | 116 | 52 | 19 | M14 | UC308D1 |
| **45** | **UCPG309D1** | 67 | 245 | 190 | 50 | 19 | 24 | 129 | 57 | 22 | M16 | UC309D1 |
| **50** | **UCPG310D1** | 75 | 275 | 212 | 55 | 19 | 27 | 143 | 61 | 22 | M16 | UC310D1 |
| **55** | **UCPG311D1** | 80 | 310 | 236 | 60 | 19 | 30 | 154 | 66 | 25 | M16 | UC311D1 |
| **60** | **UCPG312D1** | 85 | 330 | 250 | 65 | 24 | 32 | 165 | 71 | 26 | M20 | UC312D1 |
| **65** | **UCPG313D1** | 90 | 340 | 260 | 65 | 24 | 33 | 176 | 75 | 30 | M20 | UC313D1 |
| **70** | **UCPG314D1** | 95 | 360 | 280 | 65 | 26 | 35 | 187 | 78 | 33 | M22 | UC314D1 |
| **75** | **UCPG315D1** | 100 | 380 | 290 | 75 | 26 | 35 | 198 | 82 | 32 | M22 | UC315D1 |
| **80** | **UCPG316D1** | 106 | 400 | 300 | 80 | 26 | 40 | 210 | 86 | 34 | M22 | UC316D1 |
| **85** | **UCPG317D1** | 112 | 420 | 320 | 80 | 32 | 40 | 220 | 96 | 40 | M27 | UC317D1 |
| **90** | **UCPG318D1** | 118 | 430 | 330 | 80 | 32 | 45 | 235 | 96 | 40 | M27 | UC318D1 |
| **95** | **UCPG319D1** | 125 | 470 | 360 | 90 | 35 | 45 | 250 | 103 | 41 | M30 | UC319D1 |
| **100** | **UCPG320D1** | 140 | 490 | 380 | 90 | 35 | 50 | 275 | 108 | 42 | M30 | UC320D1 |
| **105** | **UCPG321D1** | 140 | 490 | 380 | 90 | 35 | 50 | 280 | 112 | 44 | M30 | UC321D1 |
| **110** | **UCPG322D1** | 150 | 520 | 400 | 100 | 38 | 55 | 300 | 117 | 46 | M33 | UC322D1 |
| **120** | **UCPG324D1** | 160 | 570 | 450 | 100 | 38 | 65 | 320 | 126 | 51 | M33 | UC324D1 |
| **130** | **UCPG326D1** | 180 | 600 | 480 | 110 | 38 | 75 | 355 | 135 | 54 | M33 | UC326D1 |
| **140** | **UCPG328D1** | 200 | 620 | 500 | 110 | 38 | 75 | 390 | 145 | 59 | M33 | UC328D1 |

Remark: 1) These numbers indicate relubricatable type. If maintenance free type is needed, please order without suffix "D1".
Note: Please refer to page 36 for size of grease fitting.

| Housing [1)] number | Mass of unit kg |
|---|---|
| PG305D1 | 1.6 |
| PG306D1 | 2.0 |
| PG307D1 | 2.8 |
| PG308D1 | 3.6 |
| PG309D1 | 5.0 |
| PG310D1 | 6.9 |
| PG311D1 | 8.8 |
| PG312D1 | 11 |
| PG313D1 | 12 |
| PG314D1 | 14 |
| PG315D1 | 18 |
| PG316D1 | 21 |
| PG317D1 | 23 |
| PG318D1 | 26 |
| PG319D1 | 33 |
| PG320D1 | 40 |
| PG321D1 | 41 |
| PG322D1 | 52 |
| PG324D1 | 64 |
| PG326D1 | 76 |
| PG328D1 | 98 |

## Pillow blocks (Stainless series)
## Set screw type

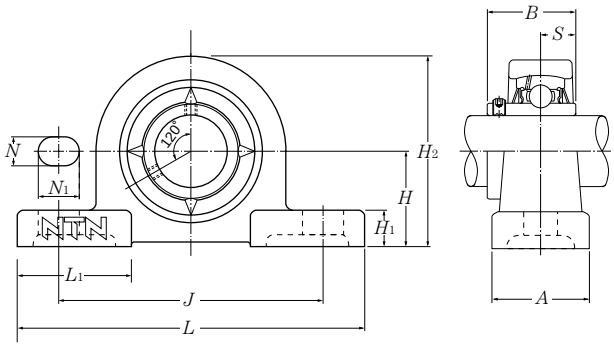


| Shaft dia. mm | Unit number | Nominal dimensions mm | | | | | | | | | | | Bolt size mm |
|---|---|---|---|---|---|---|---|---|---|---|---|---|---|
| | | $H$ | $L$ | $J$ | $A$ | $N$ | $N_1$ | $H_1$ | $H_2$ | $L_1$ | $B$ | $S$ | |
| **20** | **F-UCPM204/LP03** | 33.3 | 120 | 95 | 30 | 12 | 14 | 11 | 64 | 42 | 31 | 12.7 | M10 |
| **25** | **F-UCPM205/LP03** | 36.5 | 130 | 105 | 30 | 12 | 14 | 12 | 70 | 42 | 34.1 | 14.3 | M10 |
| **30** | **F-UCPM206/LP03** | 42.9 | 155 | 121 | 36 | 17 | 20 | 13 | 82 | 54 | 38.1 | 15.9 | M14 |
| **35** | **F-UCPM207/LP03** | 47.6 | 161 | 127 | 38 | 17 | 20 | 14 | 92 | 54 | 42.9 | 17.5 | M14 |
| **40** | **F-UCPM208/LP03** | 49.2 | 171 | 137 | 40 | 17 | 20 | 14 | 98 | 52 | 49.2 | 19 | M14 |
| **45** | **F-UCPM209/LP03** | 54 | 180 | 146 | 40 | 17 | 20 | 14 | 105 | 60 | 49.2 | 19 | M14 |
| **50** | **F-UCPM210/LP03** | 57.2 | 195 | 159 | 45 | 19 | 22 | 16 | 114 | 65 | 51.6 | 19 | M16 |

Remark: 1) This series uses solid grease in the bearings as standard. A stainless steel bearing unit packed with a food grade grease or heat resistance grease is also available.
2) The basic dynamic load rating $C_r$ of the bearing is different from a bearing made with standard bearing steel.

| Bearing number | Basic load ratings | | Housing number | Mass of unit |
|---|---|---|---|---|
| | dynamic | static | | |
| mm | kN | | mm | kg |
| | $C_r$ | $C_{or}$ | | |
| F-UC204D1/LP03 | 9.9 | 6.65 | PM204 | 0.6 |
| F-UC205D1/LP03 | 10.8 | 7.85 | PM205 | 0.7 |
| F-UC206D1/LP03 | 15.0 | 11.3 | PM206 | 1.1 |
| F-UC207D1/LP03 | 19.7 | 15.3 | PM207 | 1.3 |
| F-UC208D1/LP03 | 22.4 | 17.8 | PM208 | 1.7 |
| F-UC209D1/LP03 | 25.2 | 20.4 | PM209 | 1.8 |
| F-UC210D1/LP03 | 27.0 | 23.2 | PM210 | 2.4 |

## Pillow blocks (Plastic housing series)
## Set screw type

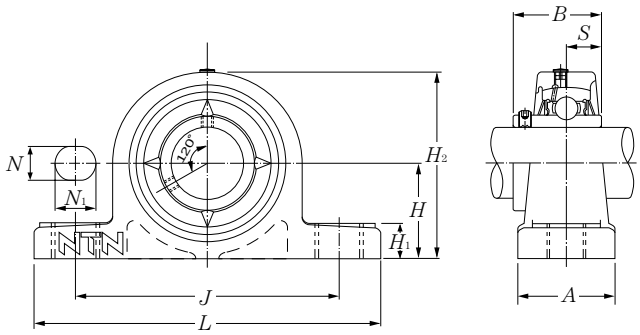


| Shaft dia. mm | Unit number | Nominal dimensions mm | | | | | | | | | | Bolt size mm |
|---|---|---|---|---|---|---|---|---|---|---|---|---|
| | | $H$ | $L$ | $J$ | $A$ | $N$ | $N_1$ | $H_1$ | $H_2$ | $B$ | $S$ | |
| 20 | F-UCPR204/LP03 | 33.3 | 127 | 95 | 38 | 11 ※ | 14 ※ | 14.2 | 65 | 31 | 12.7 | M10 |
| 25 | F-UCPR205/LP03 | 36.5 | 140 | 105 | 38 | 11 ※ | 14 ※ | 14.5 | 71 | 34.1 | 14.3 | M10 |
| 30 | F-UCPR206/LP03 | 42.9 | 162 | 119 ※ | 46 | 14 ※ | 18 ※ | 17.8 | 83 | 38.1 | 15.9 | M12 ※ |
| 35 | F-UCPR207/LP03 | 47.6 | 167 | 127 | 48 | 14 ※ | 18 ※ | 18 | 94 | 42.9 | 17.5 | M12 ※ |
| 40 | F-UCPR208/LP03 | 49.2 | 184 | 137 | 54 | 14 ※ | 18 ※ | 19.5 | 98 | 49.2 | 19 | M12 ※ |

Remark: 1) This series uses solid grease in the bearings as standard. Ball bearings packed with a food grade grease are also available.
2) Some dimensions are different from those for a cast iron housings (JIS product). (Main parts are shown with " ※ " )
3) The basic dynamic load rating $C_r$ of the bearing is different from a bearing made with standard bearing steel.

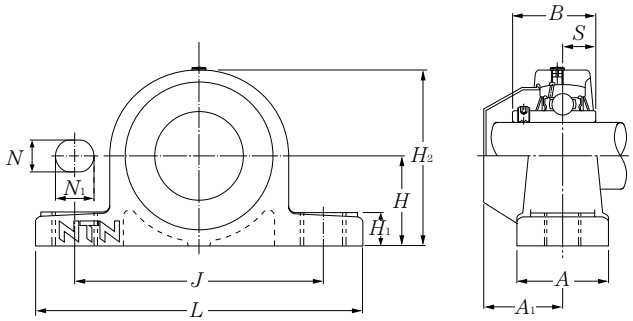


**Resin dust cover type**

| Bearing number | Basic load ratings dynamic kN $C_r$ | Basic load ratings static kN $C_{or}$ | Housing number mm | Unit number resin dust cover type | Nominal dimension mm $A_1$ | Mass of unit kg F-UCPR | Mass of unit kg F-RM-UCPR |
|---|---|---|---|---|---|---|---|
| F-UC204D1/LP03 | 9.9 | 6.65 | PR204 | **F-RM-UCPR204/LP03** | 33 | 0.3 | 0.3 |
| F-UC205D1/LP03 | 10.8 | 7.85 | PR205 | **F-RM-UCPR205/LP03** | 34 | 0.3 | 0.3 |
| F-UC206D1/LP03 | 15.0 | 11.3 | PR206 | **F-RM-UCPR206/LP03** | 41 | 0.5 | 0.5 |
| F-UC207D1/LP03 | 19.7 | 15.3 | PR207 | **F-RM-UCPR207/LP03** | 43 | 0.7 | 0.7 |
| F-UC208D1/LP03 | 22.4 | 17.8 | PR208 | **F-RM-UCPR208/LP03** | 49 | 1.0 | 1.0 |

## Thick pillow blocks cast housing
## Set screw type

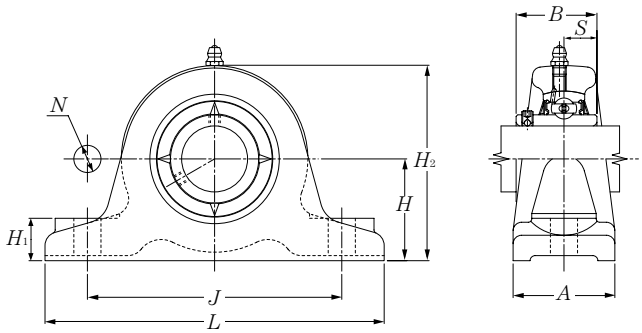


| Shaft dia. mm / inch | Unit number [1] | Nominal dimensions mm / inch H | L | J | A | N | H₁ | H₂ | B | S | Bolt size mm / inch | Bearing number |
|---|---|---|---|---|---|---|---|---|---|---|---|---|
| 40 | UCIP208D1 | 60 | 200 | 150 | 60 | 19 | 25 | 115 | 49.2 | 19 | M16 | UC208D1 |
| 1 1/2 | UCIP208-108D1 | 2 23/64 | 7 7/8 | 5 29/32 | 2 3/8 | 3/4 | 31/32 | 4 17/32 | 1.9370 | 0.748 | 5/8 | UC208-108D1 |
| 1 9/16 | UCIP208-109D1 | | | | | | | | | | | UC208-109D1 |
| 45 | UCIP209D1 | 70 | 210 | 160 | 60 | 19 | 25 | 128 | 49.2 | 19 | M16 | UC209D1 |
| 1 5/8 | UCIP209-110D1 | | | | | | | | | | | UC209-110D1 |
| 1 11/16 | UCIP209-111D1 | 2 3/4 | 8 9/32 | 6 19/64 | 2 3/8 | 3/4 | 31/32 | 5 1/32 | 1.9370 | 0.748 | 5/8 | UC209-111D1 |
| 1 3/4 | UCIP209-112D1 | | | | | | | | | | | UC209-112D1 |
| 50 | UCIP210D1 | 70 | 220 | 170 | 60 | 19 | 28 | 132 | 51.6 | 19 | M16 | UC210D1 |
| 1 13/16 | UCIP210-113D1 | | | | | | | | | | | UC210-113D1 |
| 1 7/8 | UCIP210-114D1 | 2 3/4 | 8 21/32 | 6 11/16 | 2 3/8 | 3/4 | 1 3/32 | 5 3/16 | 2.0315 | 0.748 | 5/8 | UC210-114D1 |
| 1 15/16 | UCIP210-115D1 | | | | | | | | | | | UC210-115D1 |
| 2 | UCIP210-200D1 | | | | | | | | | | | UC210-200D1 |
| 55 | UCIP211D1 | 80 | 230 | 180 | 60 | 19 | 28 | 148 | 55.6 | 22.2 | M16 | UC211D1 |
| 2 | UCIP211-200D1 | | | | | | | | | | | UC211-200D1 |
| 2 1/16 | UCIP211-201D1 | 3 5/32 | 9 1/16 | 7 3/32 | 2 3/8 | 3/4 | 1 3/32 | 5 13/16 | 2.1890 | 0.874 | 5/8 | UC211-201D1 |
| 2 1/8 | UCIP211-202D1 | | | | | | | | | | | UC211-202D1 |
| 2 3/16 | UCIP211-203D1 | | | | | | | | | | | UC211-203D1 |
| 60 | UCIP212D1 | 80 | 260 | 200 | 70 | 22 | 30 | 155 | 65.1 | 25.4 | M20 | UC212D1 |
| 2 1/4 | UCIP212-204D1 | | | | | | | | | | | UC212-204D1 |
| 2 5/16 | UCIP212-205D1 | 3 5/32 | 10 1/4 | 7 7/8 | 2 3/4 | 55/64 | 1 3/16 | 6 3/32 | 2.5630 | 1.000 | 3/4 | UC212-205D1 |
| 2 3/8 | UCIP212-206D1 | | | | | | | | | | | UC212-206D1 |
| 2 7/16 | UCIP212-207D1 | | | | | | | | | | | UC212-207D1 |
| 65 | UCIP213D1 | 90 | 280 | 220 | 70 | 22 | 30 | 172 | 65.1 | 25.4 | M20 | UC213D1 |
| 2 1/2 | UCIP213-208D1 | 3 35/64 | 11 1/32 | 8 21/32 | 2 3/4 | 55/64 | 1 3/16 | 6 25/32 | 2.5630 | 1.000 | 3/4 | UC213-208D1 |
| 2 9/16 | UCIP213-209D1 | | | | | | | | | | | UC213-209D1 |

Remarks: 1) These number indicate relubricatable type. If maintenance free type is needed, please order without suffix "D1".
Note: Please refer to page 36 for size of grease fitting.

| Housing [1)] number | Mass of unit kg | lb |
|---|---|---|
| IP208D1 | 4.8 | |
| IP208D1 | | 11 |
| IP209D1 | 5.5 | |
| IP209D1 | | 12 |
| IP210D1 | 6.1 | |
| IP210D1 | | 13 |
| IP211D1 | 7.3 | |
| IP211D1 | | 16 |
| IP212D1 | 9.7 | |
| IP212D1 | | 21 |
| IP213D1 | 12 | |
| IP213D1 | | 26 |

## Thick pillow blocks cast housing
## Set screw type

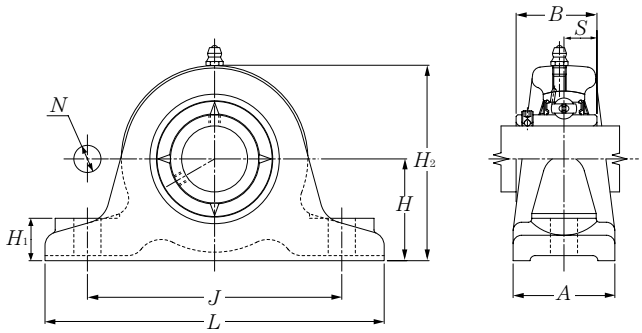


| Shaft dia. mm / inch | Unit number [1] | Nominal dimensions mm / inch H | L | J | A | N | H₁ | H₂ | B | S | Bolt size mm / inch | Bearing number |
|---|---|---|---|---|---|---|---|---|---|---|---|---|
| 65 | UCIP313D1 | 110 | 310 | 250 | 70 | 22 | 30 | 208 | 75 | 30 | M20 | UC313D1 |
| 2 1/2 | UCIP313-208D1 | 4 21/64 | 12 7/32 | 9 27/32 | 2 3/4 | 55/64 | 3/16 | 8 3/16 | 2.9528 | 1.181 | 3/4 | UC313-208D1 |
| 2 9/16 | UCIP313-209D1 | | | | | | | | | | | UC313-209D1 |
| 70 | UCIP314D1 | 110 | 330 | 270 | 75 | 25 | 35 | 215 | 78 | 33 | M22 | UC314D1 |
| 2 5/8 | UCIP314-210D1 | | | | | | | | | | | UC314-210D1 |
| 2 11/16 | UCIP314-211D1 | 4 21/64 | 13 | 10 5/8 | 2 15/16 | 63/64 | 1 3/8 | 8 15/32 | 3.0709 | 1.299 | 7/8 | UC314-211D1 |
| 2 3/4 | UCIP314-212D1 | | | | | | | | | | | UC314-212D1 |
| 75 | UCIP315D1 | 120 | 340 | 280 | 75 | 25 | 35 | 230 | 82 | 32 | M22 | UC315D1 |
| 2 13/16 | UCIP315-213D1 | | | | | | | | | | | UC315-213D1 |
| 2 7/8 | UCIP315-214D1 | 4 23/32 | 13 3/8 | 11 1/32 | 2 15/16 | 63/64 | 1 3/8 | 9 1/16 | 3.2283 | 1.260 | 7/8 | UC315-214D1 |
| 2 15/16 | UCIP315-215D1 | | | | | | | | | | | UC315-215D1 |
| 3 | UCIP315-300D1 | | | | | | | | | | | UC315-300D1 |
| 80 | UCIP316D1 | 120 | 350 | 290 | 85 | 25 | 40 | 235 | 86 | 34 | M22 | UC316D1 |
| 3 1/16 | UCIP316-301D1 | | | | | | | | | | | UC316-301D1 |
| 3 1/8 | UCIP316-302D1 | 4 23/32 | 13 25/32 | 11 27/64 | 3 11/32 | 63/64 | 1 9/16 | 9 1/4 | 3.3858 | 1.339 | 7/8 | UC316-302D1 |
| 3 3/16 | UCIP316-303D1 | | | | | | | | | | | UC316-303D1 |
| 85 | UCIP317D1 | 130 | 370 | 310 | 85 | 25 | 40 | 255 | 96 | 40 | M22 | UC317D1 |
| 3 1/4 | UCIP317-304D1 | | | | | | | | | | | UC317-304D1 |
| 3 5/16 | UCIP317-305D1 | 5 1/8 | 14 9/16 | 12 13/64 | 3 11/32 | 63/64 | 1 9/16 | 10 1/32 | 3.7795 | 1.575 | 7/8 | UC317-305D1 |
| 3 7/16 | UCIP317-307D1 | | | | | | | | | | | UC317-307D1 |
| 90 | UCIP318D1 | 130 | 400 | 330 | 85 | 30 | 45 | 260 | 96 | 40 | M27 | UC318D1 |
| 3 7/16 | UCIP318-307D1 | 5 1/8 | 15 3/4 | 12 63/64 | 3 11/32 | 1 3/16 | 1 25/32 | 10 1/4 | 3.7795 | 1.575 | 1 | UC318-307D1 |
| 3 1/2 | UCIP318-308D1 | | | | | | | | | | | UC318-308D1 |
| 95 | UCIP319D1 | 150 | 410 | 340 | 85 | 30 | 45 | 285 | 103 | 41 | M27 | UC319D1 |
| 3 5/8 | UCIP319-310D1 | | | | | | | | | | | UC319-310D1 |
| 3 11/16 | UCIP319-311D1 | 5 29/32 | 16 5/32 | 13 25/64 | 3 11/32 | 1 3/16 | 1 25/32 | 11 7/32 | 4.0551 | 1.614 | 1 | UC319-311D1 |
| 3 3/4 | UCIP319-312D1 | | | | | | | | | | | UC319-312D1 |

Remarks: 1) These number indicate relubricatable type. If maintenance free type is needed, please order without suffix "D1".
Note: Please refer to page 36 for size of grease fitting.

| Housing [1)] number | Mass of unit kg | lb |
|---|---|---|
| IP313D1 | 17 | |
| IP313D1 | | 37 |
| IP314D1 | 20 | |
| IP314D1 | | 44 |
| IP315D1 | 23 | |
| IP315D1 | | 51 |
| IP316D1 | 27 | |
| IP316D1 | | 60 |
| IP317D1 | 32 | |
| IP317D1 | | 71 |
| IP318D1 | 34 | |
| IP318D1 | | 75 |
| IP319D1 | 39 | |
| IP319D1 | | 86 |

## Thick pillow blocks cast housing
## Set screw type

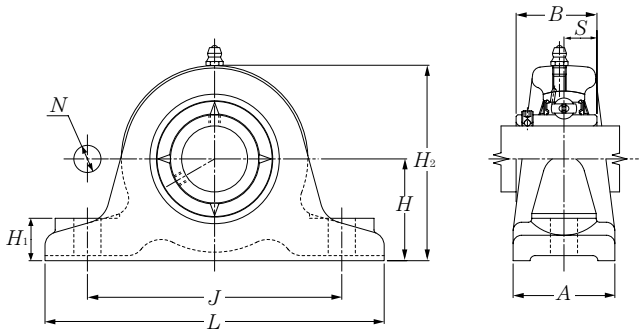


| Shaft dia. mm / inch | Unit number [1] | Nominal dimensions mm / inch H | L | J | A | N | H₁ | H₂ | B | S | Bolt size mm / inch | Bearing number |
|---|---|---|---|---|---|---|---|---|---|---|---|---|
| **100** | **UCIP320D1** | 150 | 430 | 360 | 85 | 30 | 45 | 295 | 108 | 42 | M27 | UC320D1 |
| **3 13/16** | **UCIP320-313D1** | | | | | | | | | | | UC320-313D1 |
| **3 7/8** | **UCIP320-314D1** | 5 29/32 | 16 15/16 | 14 3/16 | 3 11/32 | 1 3/16 | 1 25/32 | 11 5/8 | 4.2520 | 1.654 | 1 | UC320-314D1 |
| **3 15/16** | **UCIP320-315D1** | | | | | | | | | | | UC320-315D1 |
| **4** | **UCIP320-400D1** | | | | | | | | | | | UC320-400D1 |
| **110** | **UCIP322D1** | 170 | 490 | 410 | 100 | 33 | 50 | 335 | 117 | 46 | M30 | UC322D1 |
| **120** | **UCIP324D1** | 170 | 510 | 430 | 100 | 33 | 50 | 345 | 126 | 51 | M30 | UC324D1 |
| **130** | **UCIP326D1** | 200 | 550 | 470 | 110 | 33 | 50 | 390 | 135 | 54 | M30 | UC326D1 |
| **140** | **UCIP328D1** | 200 | 590 | 500 | 110 | 36 | 55 | 400 | 145 | 59 | M33 | UC328D1 |

Remarks: 1) These number indicate relubricatable type. If maintenance free type is needed, please order without suffix "D1".
Note: Please refer to page 36 for size of grease fitting.

| Housing [1)] number | Mass of unit kg | lb |
|---|---|---|
| IP320D1 | 43 | |
| IP320D1 | 95 | |
| IP322D1 | 64 | |
| IP324D1 | 70 | |
| IP326D1 | 96 | |
| IP328D1 | 104 | |

## Thick pillow blocks (Steel series)
## Set screw type

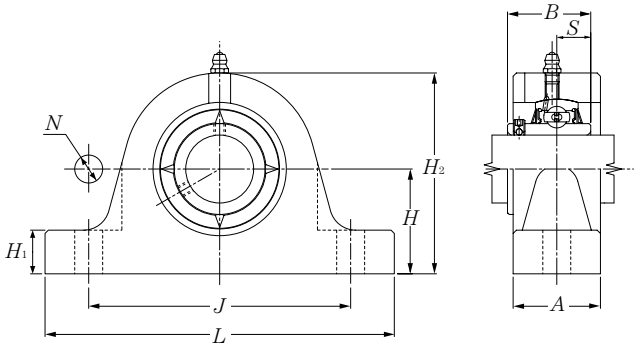


### UCIPG2

| Shaft dia. mm | Unit number 1) | Nominal dimensions mm | | | | | | | | | Bolt size mm | Bearing number |
|---|---|---|---|---|---|---|---|---|---|---|---|---|
| | | H | L | J | A | N | H1 | H2 | B | S | | |
| 40 | UCIPG208D1 | 60 | 200 | 150 | 60 | 19 | 25 | 115 | 49.2 | 19 | M16 | UC208D1 |
| 45 | UCIPG209D1 | 70 | 210 | 160 | 60 | 19 | 25 | 128 | 49.2 | 19 | M16 | UC209D1 |
| 50 | UCIPG210D1 | 70 | 220 | 170 | 60 | 19 | 28 | 132 | 51.6 | 19 | M16 | UC210D1 |
| 55 | UCIPG211D1 | 80 | 230 | 180 | 60 | 19 | 28 | 148 | 55.6 | 22.2 | M16 | UC211D1 |
| 60 | UCIPG212D1 | 80 | 260 | 200 | 70 | 22 | 30 | 155 | 65.1 | 25.4 | M20 | UC212D1 |
| 65 | UCIPG213D1 | 90 | 280 | 220 | 70 | 22 | 30 | 172 | 65.1 | 25.4 | M20 | UC213D1 |

### UCIPG3

| Shaft dia. mm | Unit number 1) | Nominal dimensions mm | | | | | | | | | Bolt size mm | Bearing number |
|---|---|---|---|---|---|---|---|---|---|---|---|---|
| | | H | L | J | A | N | H1 | H2 | B | S | | |
| 65 | UCIPG313D1 | 110 | 310 | 250 | 70 | 22 | 30 | 208 | 75 | 30 | M20 | UC313D1 |
| 70 | UCIPG314D1 | 110 | 330 | 270 | 75 | 25 | 35 | 215 | 78 | 33 | M22 | UC314D1 |
| 75 | UCIPG315D1 | 120 | 340 | 280 | 75 | 25 | 35 | 230 | 82 | 32 | M22 | UC315D1 |
| 80 | UCIPG316D1 | 120 | 350 | 290 | 85 | 25 | 40 | 235 | 86 | 34 | M22 | UC316D1 |
| 85 | UCIPG317D1 | 130 | 370 | 310 | 85 | 25 | 40 | 255 | 96 | 40 | M22 | UC317D1 |
| 90 | UCIPG318D1 | 130 | 400 | 330 | 85 | 30 | 45 | 260 | 96 | 40 | M27 | UC318D1 |
| 95 | UCIPG319D1 | 150 | 410 | 340 | 85 | 30 | 45 | 285 | 103 | 41 | M27 | UC319D1 |
| 100 | UCIPG320D1 | 150 | 430 | 360 | 85 | 30 | 45 | 295 | 108 | 42 | M27 | UC320D1 |
| 110 | UCIPG322D1 | 170 | 490 | 410 | 100 | 33 | 50 | 335 | 117 | 46 | M30 | UC322D1 |
| 120 | UCIPG324D1 | 170 | 510 | 430 | 100 | 33 | 50 | 345 | 126 | 51 | M30 | UC324D1 |
| 130 | UCIPG326D1 | 200 | 550 | 470 | 110 | 33 | 50 | 390 | 135 | 54 | M30 | UC326D1 |
| 140 | UCIPG328D1 | 200 | 590 | 500 | 110 | 36 | 55 | 400 | 145 | 59 | M33 | UC328D1 |

Remarks: 1) These number indicate relubricatable type. If maintenance free type is needed, please order without suffix "D1".
Note: Please refer to page 36 for size of grease fitting.

| Housing [1] number | Mass of unit kg |
|---|---|
| IPG208D1 | 4.8 |
| IPG209D1 | 5.5 |
| IPG210D1 | 6.1 |
| IPG211D1 | 7.3 |
| IPG212D1 | 9.7 |
| IPG213D1 | 12 |

| Housing [1] number | Mass of unit kg |
|---|---|
| IPG313D1 | 17 |
| IPG314D1 | 20 |
| IPG315D1 | 23 |
| IPG316D1 | 27 |
| IPG317D1 | 32 |
| IPG318D1 | 34 |
| IPG319D1 | 39 |
| IPG320D1 | 43 |
| IPG322D1 | 64 |
| IPG324D1 | 70 |
| IPG326D1 | 96 |
| IPG328D1 | 104 |

## Pillow blocks cast housing high center height
## Set screw type

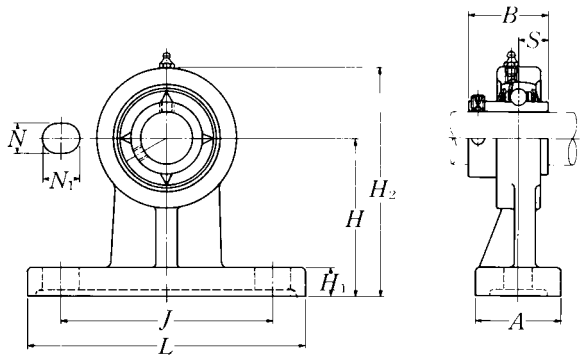


| Shaft dia. mm / inch | Unit number [1] | Nominal dimensions H | L | J | A | N (mm / inch) | N1 | H1 | H2 | B | S | Bolt size mm / inch | Bearing number |
|---|---|---|---|---|---|---|---|---|---|---|---|---|---|
| 12 | UCHP201D1 | 70 | 127 | 95 | 40 | 13 | 19 | 13 | 101 | 31 | 12.7 | M10 | UC201D1 |
| 1/2 | UCHP201-008D1 | 2 3/4 | 5 | 3 3/4 | 1 9/16 | 1/2 | 3/4 | 1/2 | 3 31/32 | 1.2205 | 0.500 | 3/8 | UC201-008D1 |
| 15 | UCHP202D1 | 70 | 127 | 95 | 40 | 13 | 19 | 13 | 101 | 31 | 12.7 | M10 | UC202D1 |
| 9/16 | UCHP202-009D1 | 2 3/4 | 5 | 3 3/4 | 1 9/16 | 1/2 | 3/4 | 1/2 | 3 31/32 | 1.2205 | 0.500 | 3/8 | UC202-009D1 |
| 5/8 | UCHP202-010D1 | | | | | | | | | | | | UC202-010D1 |
| 17 | UCHP203D1 | 70 | 127 | 95 | 40 | 13 | 19 | 13 | 101 | 31 | 12.7 | M10 | UC203D1 |
| 11/16 | UCHP203-011D1 | 2 3/4 | 5 | 3 3/4 | 1 9/16 | 1/2 | 3/4 | 1/2 | 3 31/32 | 1.2205 | 0.500 | 3/8 | UC203-011D1 |
| 20 | UCHP204D1 | 70 | 127 | 95 | 40 | 13 | 19 | 13 | 101 | 31 | 12.7 | M10 | UC204D1 |
| 3/4 | UCHP204-012D1 | 2 3/4 | 5 | 3 3/4 | 1 9/16 | 1/2 | 3/4 | 1/2 | 3 31/32 | 1.2205 | 0.500 | 3/8 | UC204-012D1 |
| 25 | UCHP205D1 | 80 | 142 | 105 | 50 | 13 | 19 | 13 | 114 | 34.1 | 14.3 | M10 | UC205D1 |
| 13/16 | UCHP205-013D1 | | | | | | | | | | | | UC205-013D1 |
| 7/8 | UCHP205-014D1 | 3 5/32 | 5 19/32 | 4 1/8 | 1 31/32 | 1/2 | 3/4 | 1/2 | 4 1/2 | 1.3425 | 0.563 | 3/8 | UC205-014D1 |
| 15/16 | UCHP205-015D1 | | | | | | | | | | | | UC205-015D1 |
| 1 | UCHP205-100D1 | | | | | | | | | | | | UC205-100D1 |
| 30 | UCHP206D1 | 90 | 165 | 120 | 50 | 17 | 21 | 16 | 130 | 38.1 | 15.9 | M14 | UC206D1 |
| 1 1/16 | UCHP206-101D1 | | | | | | | | | | | | UC206-101D1 |
| 1 1/8 | UCHP206-102D1 | 3 35/64 | 6 1/2 | 4 23/32 | 1 31/32 | 21/32 | 13/16 | 5/8 | 5 1/8 | 1.5000 | 0.626 | 1/2 | UC206-102D1 |
| 1 3/16 | UCHP206-103D1 | | | | | | | | | | | | UC206-103D1 |
| 1 1/4 | UCHP206-104D1 | | | | | | | | | | | | UC206-104D1 |
| 35 | UCHP207D1 | 95 | 166 | 127 | 60 | 17 | 21 | 18 | 140 | 42.9 | 17.5 | M14 | UC207D1 |
| 1 1/4 | UCHP207-104D1 | | | | | | | | | | | | UC207-104D1 |
| 1 5/16 | UCHP207-105D1 | 3 47/64 | 6 17/32 | 5 | 2 3/8 | 21/32 | 13/16 | 23/32 | 5 1/2 | 1.6890 | 0.689 | 1/2 | UC207-105D1 |
| 1 3/8 | UCHP207-106D1 | | | | | | | | | | | | UC207-106D1 |
| 1 7/16 | UCHP207-107D1 | | | | | | | | | | | | UC207-107D1 |
| 40 | UCHP208D1 | 100 | 184 | 136 | 70 | 17 | 21 | 20 | 150 | 49.2 | 19 | M14 | UC208D1 |
| 1 1/2 | UCHP208-108D1 | 3 15/16 | 7 1/4 | 5 11/32 | 2 3/4 | 21/32 | 13/16 | 25/32 | 5 29/32 | 1.9370 | 0.748 | 1/2 | UC208-108D1 |
| 1 9/16 | UCHP208-109D1 | | | | | | | | | | | | UC208-109D1 |

Remarks: 1) These numbers indicate relubricatable type. If maintenance free type is needed, please order without suffix "D1".
Note: Please refer to page 36 for size of grease fitting.

| Housing [1)] number | Mass of unit kg | lb |
|---|---|---|
| HP204D1 | 0.9 | |
| HP204D1 | 2.0 | |
| HP204D1 | 0.9 | |
| HP204D1 | 2.0 | |
| HP204D1 | | |
| HP204D1 | 0.9 | |
| HP204D1 | 2.0 | |
| HP204D1 | 0.9 | |
| HP204D1 | 2.0 | |
| HP205D1 | 1.2 | |
| HP205D1 | | |
| HP205D1 | 2.7 | |
| HP205D1 | | |
| HP205D1 | | |
| HP206D1 | 1.8 | |
| HP206D1 | | |
| HP206D1 | 4.0 | |
| HP206D1 | | |
| HP206D1 | | |
| HP207D1 | 2.3 | |
| HP207D1 | | |
| HP207D1 | 5.1 | |
| HP207D1 | | |
| HP207D1 | | |
| HP208D1 | 3.2 | |
| HP208D1 | 7.1 | |
| HP208D1 | | |

## Pillow blocks cast housing high center height
## Set screw type

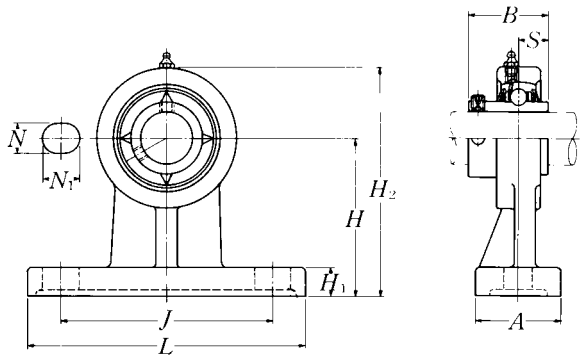


| Shaft dia. mm / inch | Unit number [1] | Nominal dimensions mm / inch H | L | J | A | N | N1 | H1 | H2 | B | S | Bolt size mm / inch | Bearing number |
|---|---|---|---|---|---|---|---|---|---|---|---|---|---|
| **45** | **UCHP209D1** | 105 | 190 | 146 | 70 | 17 | 22 | 20 | 158 | 49.2 | 19 | M14 | UC209D1 |
| **1 5/8** | **UCHP209-110D1** | | | | | | | | | | | | UC209-110D1 |
| **1 11/16** | **UCHP209-111D1** | 4 9/64 | 7 15/32 | 5 3/4 | 2 3/4 | 21/32 | 7/8 | 25/32 | 6 7/32 | 1.9370 | 0.748 | 1/2 | UC209-111D1 |
| **1 3/4** | **UCHP209-112D1** | | | | | | | | | | | | UC209-112D1 |
| **50** | **UCHP210D1** | 110 | 206 | 159 | 70 | 20 | 22 | 22 | 165 | 51.6 | 19 | M16 | UC210D1 |
| **1 13/16** | **UCHP210-113D1** | | | | | | | | | | | | UC210-113D1 |
| **1 7/8** | **UCHP210-114D1** | 4 21/64 | 8 1/8 | 6 1/4 | 2 3/4 | 25/32 | 7/8 | 7/8 | 6 1/2 | 2.0315 | 0.748 | 5/8 | UC210-114D1 |
| **1 15/16** | **UCHP210-115D1** | | | | | | | | | | | | UC210-115D1 |
| **2** | **UCHP210-200D1** | | | | | | | | | | | | UC210-200D1 |

Remarks: 1) These numbers indicate relubricatable type. If maintenance free type is needed, please order without suffix "D1".
Note: Please refer to page 36 for size of grease fitting.

| Housing [1)] number | Mass of unit kg lb |
|---|---|
| HP209D1 | 3.5 |
| HP209D1 | |
| HP209D1 | 7.7 |
| HP209D1 | |
| HP210D1 | 3.9 |
| HP210D1 | |
| HP210D1 | 8.6 |
| HP210D1 | |
| HP210D1 | |

## Narrow pillow blocks cast housing
## Set screw type

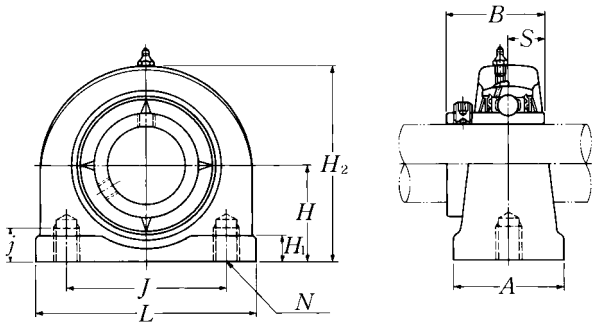


| Shaft dia. mm / inch | Unit number [1] | Nominal dimensions H | L | J | A | j (mm / inch) | H1 (mm / inch) | H2 (mm / inch) | B | S | N | Bearing number |
|---|---|---|---|---|---|---|---|---|---|---|---|---|
| 12 | UCUP201D1 | 30.2 | 76 | 52 | 38 | 13 | 11 | 62 | 31 | 12.7 | M10 × 1.5 | UC201D1 |
| 1/2 | UCUP201-008D1 | 1 3/16 | 3 | 2 1/16 | 1 1/2 | 1/2 | 7/16 | 2 7/16 | 1.2205 | 0.500 | | UC201-008D1 |
| 15 | UCUP202D1 | 30.2 | 76 | 52 | 38 | 13 | 11 | 62 | 31 | 12.7 | M10 × 1.5 | UC202D1 |
| 9/16 | UCUP202-009D1 | 1 3/16 | 3 | 2 1/16 | 1 1/2 | 1/2 | 7/16 | 2 7/16 | 1.2205 | 0.500 | | UC202-009D1 |
| 5/8 | UCUP202-010D1 | | | | | | | | | | | UC202-010D1 |
| 17 | UCUP203D1 | 30.2 | 76 | 52 | 38 | 13 | 11 | 62 | 31 | 12.7 | M10 × 1.5 | UC203D1 |
| 11/16 | UCUP203-011D1 | 1 3/16 | 3 | 2 1/16 | 1 1/2 | 1/2 | 7/16 | 2 7/16 | 1.2205 | 0.500 | | UC203-011D1 |
| 20 | UCUP204D1 | 30.2 | 76 | 52 | 38 | 13 | 11 | 62 | 31 | 12.7 | M10 × 1.5 | UC204D1 |
| 3/4 | UCUP204-012D1 | 1 3/16 | 3 | 2 1/16 | 1 1/2 | 1/2 | 7/16 | 2 7/16 | 1.2205 | 0.500 | | UC204-012D1 |
| 25 | UCUP205D1 | 36.5 | 84 | 56 | 38 | 15 | 12 | 72 | 34.1 | 14.3 | M10 × 1.5 | UC205D1 |
| 13/16 | UCUP205-013D1 | | | | | | | | | | | UC205-013D1 |
| 7/8 | UCUP205-014D1 | 1 7/16 | 3 5/16 | 2 7/32 | 1 1/2 | 19/32 | 15/32 | 2 27/32 | 1.3425 | 0.563 | | UC205-014D1 |
| 15/16 | UCUP205-015D1 | | | | | | | | | | | UC205-015D1 |
| 1 | UCUP205-100D1 | | | | | | | | | | | UC205-100D1 |
| 30 | UCUP206D1 | 42.9 | 94 | 66 | 48 | 18 | 12 | 84 | 38.1 | 15.9 | M14 × 2 | UC206D1 |
| 1 1/16 | UCUP206-101D1 | | | | | | | | | | | UC206-101D1 |
| 1 1/8 | UCUP206-102D1 | 1 11/16 | 3 11/16 | 2 19/32 | 1 7/8 | 23/32 | 15/32 | 3 5/16 | 1.5000 | 0.629 | | UC206-102D1 |
| 1 3/16 | UCUP206-103D1 | | | | | | | | | | | UC206-103D1 |
| 1 1/4 | UCUP206-104D1 | | | | | | | | | | | UC206-104D1 |
| 35 | UCUP207D1 | 47.6 | 110 | 80 | 48 | 20 | 13 | 95 | 42.9 | 17.5 | M14 × 2 | UC207D1 |
| 1 1/4 | UCUP207-104D1 | | | | | | | | | | | UC207-104D1 |
| 1 5/16 | UCUP207-105D1 | 1 7/8 | 4 11/32 | 3 5/32 | 1 7/8 | 25/32 | 1/2 | 3 3/4 | 1.6890 | 0.689 | | UC207-105D1 |
| 1 3/8 | UCUP207-106D1 | | | | | | | | | | | UC207-106D1 |
| 1 7/16 | UCUP207-107D1 | | | | | | | | | | | UC207-107D1 |
| 40 | UCUP208D1 | 49.2 | 116 | 84 | 54 | 20 | 13 | 100 | 49.2 | 19 | M14 × 2 | UC208D1 |
| 1 1/2 | UCUP208-108D1 | 1 15/16 | 4 9/16 | 3 5/16 | 2 1/8 | 25/32 | 1/2 | 3 15/16 | 1.9370 | 0.748 | | UC208-108D1 |
| 1 9/16 | UCUP208-109D1 | | | | | | | | | | | UC208-109D1 |
| 45 | UCUP209D1 | 54.2 | 120 | 90 | 54 | 25 | 13 | 108 | 49.2 | 19 | M14 × 2 | UC209D1 |
| 1 5/8 | UCUP209-110D1 | | | | | | | | | | | UC209-110D1 |
| 1 11/16 | UCUP209-111D1 | 2 9/64 | 4 23/32 | 3 17/32 | 2 1/8 | 31/32 | 1/2 | 4 1/4 | 1.9370 | 0.748 | | UC209-111D1 |
| 1 3/4 | UCUP209-112D1 | | | | | | | | | | | UC209-112D1 |

Remarks: 1) These numbers indicate relubricatable type. If maintenance free type is needed, please order without suffix "D1".
Note: Please refer to page 36 for size of grease fitting.

| Housing [1)] number | Mass of unit kg | lb |
|---|---|---|
| UP204D1 | 0.6 | |
| UP204D1 | | 1.3 |
| UP204D1 | 0.6 | |
| UP204D1 | | 1.3 |
| UP204D1 | | |
| UP204D1 | 0.6 | |
| UP204D1 | | 1.3 |
| UP204D1 | 0.6 | |
| UP204D1 | | 1.3 |
| UP205D1 | 0.7 | |
| UP205D1 | | |
| UP205D1 | | 1.5 |
| UP205D1 | | |
| UP205D1 | | |
| UP206D1 | 1.1 | |
| UP206D1 | | |
| UP206D1 | | 2.4 |
| UP206D1 | | |
| UP206D1 | | |
| UP207D1 | 1.6 | |
| UP207D1 | | |
| UP207D1 | | 3.5 |
| UP207D1 | | |
| UP207D1 | | |
| UP208D1 | 1.8 | |
| UP208D1 | | 4.0 |
| UP208D1 | | |
| UP209D1 | 2.1 | |
| UP209D1 | | |
| UP209D1 | | 4.6 |
| UP209D1 | | |

## Narrow pillow blocks cast housing
## Set screw type

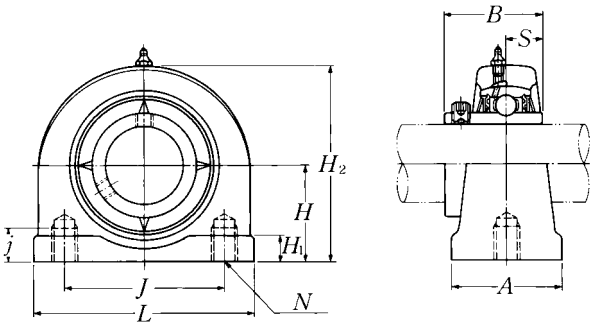


| Shaft dia. mm / inch | Unit number [1] | Nominal dimensions mm / inch H | L | J | A | j | H1 | H2 | B | S | N | Bearing number |
|---|---|---|---|---|---|---|---|---|---|---|---|---|
| **50** | **UCUP210D1** | 57.2 | 130 | 94 | 60 | 25 | 14 | 116 | 51.6 | 19 | M16 × 2 | UC210D1 |
| **1 13/16** | **UCUP210-113D1** | | | | | | | | | | | UC210-113D1 |
| **1 7/8** | **UCUP210-114D1** | 2 1/4 | 5 1/8 | 3 11/16 | 2 3/8 | 31/32 | 9/16 | 4 9/16 | 2.0315 | 0.748 | | UC210-114D1 |
| **1 15/16** | **UCUP210-115D1** | | | | | | | | | | | UC210-115D1 |
| **2** | **UCUP210-200D1** | | | | | | | | | | | UC210-200D1 |

Remarks: 1) These numbers indicate relubricatable type. If maintenance free type is needed, please order without suffix "D1".
Note: Please refer to page 36 for size of grease fitting.

| Housing [1)] number | Mass of unit kg lb |
|---|---|
| UP210D1 | 2.6 |
| UP210D1 | |
| UP210D1 | 5.7 |
| UP210D1 | |
| UP210D1 | |

## Light pillow blocks cast housing
## Set screw type

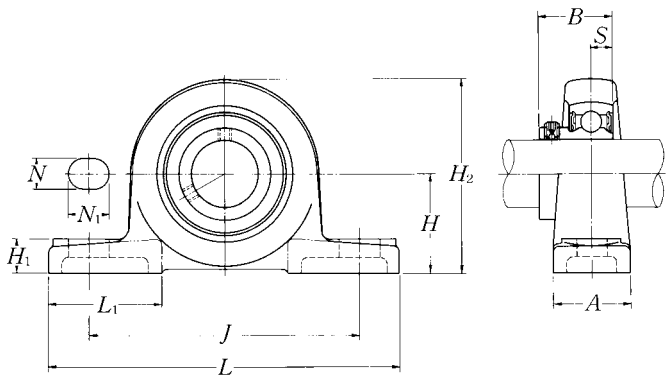


| Shaft dia. mm / inch | Unit number [1] | Nominal dimensions mm / inch H | L | J | A | N | N1 | H1 | H2 | L1 | B | S | Bolt size mm / inch | Bearing number[1] |
|---|---|---|---|---|---|---|---|---|---|---|---|---|---|---|
| 12 | ASPB201 | 30.2 | 114 | 87 | 25 | 11 | 16 | 12 | 57 | 38 | 22 | 6 | M8 | AS201 |
| 1/2 | ASPB201-008 | 1 3/16 | 4 1/2 | 3 7/16 | 31/32 | 7/16 | 5/8 | 15/32 | 2 1/4 | 1 1/2 | 0.8661 | 0.236 | 5/16 | AS201-008 |
| 15 | ASPB202 | 30.2 | 114 | 87 | 25 | 11 | 16 | 12 | 57 | 38 | 22 | 6 | M8 | AS202 |
| 9/16 | ASPB202-009 | 1 3/16 | 4 1/2 | 3 7/16 | 31/32 | 7/16 | 5/8 | 15/32 | 2 1/4 | 1 1/2 | 0.8661 | 0.236 | 5/16 | AS202-009 |
| 5/8 | ASPB202-010 | | | | | | | | | | | | | AS202-010 |
| 17 | ASPB203 | 30.2 | 114 | 87 | 25 | 11 | 16 | 12 | 57 | 38 | 22 | 6 | M8 | AS203 |
| 11/16 | ASPB203-011 | 1 3/16 | 4 1/2 | 3 7/16 | 31/32 | 7/16 | 5/8 | 15/32 | 2 1/4 | 1 1/2 | 0.8661 | 0.236 | 5/16 | AS203-011 |
| 20 | ASPB204 | 33.3 | 125 | 97 | 27 | 11 | 16 | 13 | 65 | 40 | 25 | 7 | M8 | AS204 |
| 3/4 | ASPB204-012 | 1 5/16 | 4 29/32 | 3 13/16 | 1 1/16 | 7/16 | 5/8 | 1/2 | 2 9/16 | 1 9/16 | 0.9843 | 0.276 | 5/16 | AS204-012 |
| 25 | ASPB205 | 36.5 | 130 | 100 | 29 | 11 | 16 | 13 | 71 | 42 | 27 | 7.5 | M8 | AS205 |
| 13/16 | ASPB205-013 | | | | | | | | | | | | | AS205-013 |
| 7/8 | ASPB205-014 | 1 7/16 | 5 1/8 | 3 15/16 | 1 5/32 | 7/16 | 5/8 | 1/2 | 2 25/32 | 1 21/32 | 1.0630 | 0.295 | 5/16 | AS205-014 |
| 15/16 | ASPB205-015 | | | | | | | | | | | | | AS205-015 |
| 1 | ASPB205-100 | | | | | | | | | | | | | AS205-100 |
| 30 | ASPB206 | 42.9 | 156 | 120 | 33 | 14 | 21 | 14 | 83 | 52 | 29 | 8 | M12 | AS206 |
| 1 1/16 | ASPB206-101 | | | | | | | | | | | | | AS206-101 |
| 1 1/8 | ASPB206-102 | 1 11/16 | 6 5/32 | 4 23/32 | 1 5/16 | 9/16 | 13/16 | 9/16 | 3 9/32 | 2 1/16 | 1.1417 | 0.315 | 1/2 | AS206-102 |
| 1 3/16 | ASPB206-103 | | | | | | | | | | | | | AS206-103 |
| 1 1/4 | ASPB206-104 | | | | | | | | | | | | | AS206-104 |
| 35 | ASPB207 | 47.6 | 165 | 127 | 35 | 14 | 21 | 16 | 93 | 52 | 34 | 8.5 | M12 | AS207 |
| 1 1/4 | ASPB207-104 | | | | | | | | | | | | | AS207-104 |
| 1 5/16 | ASPB207-105 | 1 7/8 | 6 1/2 | 5 | 1 3/8 | 9/16 | 13/16 | 5/8 | 3 21/32 | 2 1/16 | 1.3386 | 0.335 | 1/2 | AS207-105 |
| 1 3/8 | ASPB207-106 | | | | | | | | | | | | | AS207-106 |
| 1 7/16 | ASPB207-107 | | | | | | | | | | | | | AS207-107 |
| 40 | ASPB208 | 50.8 | 184 | 140 | 37 | 14 | 22 | 18 | 102 | 52 | 38 | 9 | M12 | AS208 |
| 1 1/2 | ASPB208-108 | 2 | 7 1/4 | 5 1/2 | 1 15/32 | 9/16 | 7/8 | 23/32 | 4 1/32 | 2 1/16 | 1.4961 | 0.354 | 1/2 | AS208-108 |
| 1 9/16 | ASPB208-109 | | | | | | | | | | | | | AS208-109 |

Remarks: 1) If relubricatable type is needed, please order with suffix "D1".

| Housing[1)] number | Mass of unit kg | lb |
|---|---|---|
| PB201 | 0.4 | |
| PB201 | | 0.9 |
| PB201 | 0.4 | |
| PB201 | | 0.9 |
| PB201 | 0.4 | |
| PB201 | | 0.9 |
| PB204 | 0.5 | |
| PB204 | | 1.1 |
| PB205 | 0.6 | |
| PB205 | | 1.3 |
| PB206 | 1.0 | |
| PB206 | | 2.2 |
| PB207 | 1.2 | |
| PB207 | | 2.7 |
| PB208 | 1.7 | |
| PB208 | | 3.8 |

## Pillow blocks ductile cast housing (Ductile series)
## Set screw type

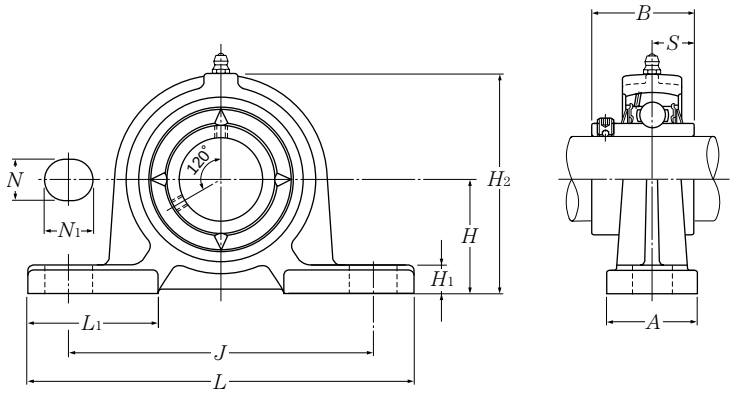


| Shaft dia. mm | Unit number [1] | Nominal dimensions mm | | | | | | | | | | | Bolt size mm | Bearing number |
|---|---|---|---|---|---|---|---|---|---|---|---|---|---|---|
| | | $H$ | $L$ | $J$ | $A$ | $N$ | $N_1$ | $H_1$ | $H_2$ | $L_1$ | $B$ | $S$ | | |
| **12** | **UCPE201D1** | 30.2 | 120 | 95 | 30 | 12 | 14 | 9 | 61 | 42 | 31 | 12.7 | M10 | UC201D1 |
| **15** | **UCPE202D1** | 30.2 | 120 | 95 | 30 | 12 | 14 | 9 | 61 | 42 | 31 | 12.7 | M10 | UC202D1 |
| **17** | **UCPE203D1** | 30.2 | 120 | 95 | 30 | 12 | 14 | 9 | 61 | 42 | 31 | 12.7 | M10 | UC203D1 |
| **20** | **UCPE204D1** | 33.3 | 120 | 95 | 30 | 12 | 14 | 9 | 64 | 42 | 31 | 12.7 | M10 | UC204D1 |
| **25** | **UCPE205D1** | 36.5 | 130 | 105 | 30 | 12 | 14 | 10 | 70 | 42 | 34.1 | 14.3 | M10 | UC205D1 |
| **30** | **UCPE206D1** | 42.9 | 155 | 121 | 36 | 17 | 20 | 11 | 82 | 54 | 38.1 | 15.9 | M14 | UC206D1 |
| **35** | **UCPE207D1** | 47.6 | 161 | 127 | 38 | 17 | 20 | 12 | 92 | 54 | 42.9 | 17.5 | M14 | UC207D1 |
| **40** | **UCPE208D1** | 49.2 | 171 | 137 | 40 | 17 | 20 | 12 | 98 | 52 | 49.2 | 19 | M14 | UC208D1 |
| **45** | **UCPE209D1** | 54 | 180 | 146 | 40 | 17 | 20 | 13 | 105 | 60 | 49.2 | 19 | M14 | UC209D1 |
| **50** | **UCPE210D1** | 57.2 | 195 | 159 | 45 | 19 | 22 | 14 | 114 | 65 | 51.6 | 19 | M16 | UC210D1 |
| **55** | **UCPE211D1** | 63.5 | 207 | 171 | 45 | 19 | 22 | 15 | 125 | 65 | 55.6 | 22.2 | M16 | UC211D1 |
| **60** | **UCPE212D1** | 69.8 | 220 | 184 | 55 | 19 | 22 | 17 | 137 | 70 | 65.1 | 25.4 | M16 | UC212D1 |

Remarks: 1) These numbers indicate relubricatable type. If maintenance free type is needed, please order without suffix "D1".
Note: Please refer to page 36 for size of grease fitting.

| Housing [1)] number | Mass of unit kg |
|---|---|
| PE203D1 | 0.5 |
| PE203D1 | 0.5 |
| PE203D1 | 0.5 |
| PE204D1 | 0.4 |
| PE205D1 | 0.5 |
| PE206D1 | 0.8 |
| PE207D1 | 1.1 |
| PE208D1 | 1.3 |
| PE209D1 | 1.5 |
| PE210D1 | 1.8 |
| PE211D1 | 2.4 |
| PE212D1 | 3.3 |

## Pillow blocks cast housing low center height
## Set screw type

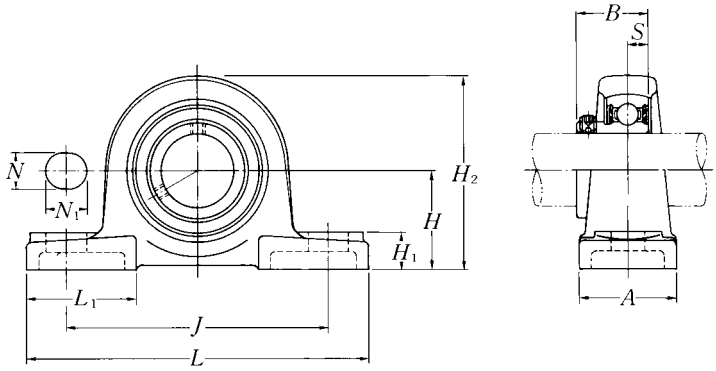


| Shaft dia. mm / inch | Unit number 1) 2) 3) | Nominal dimensions mm / inch H | L | J | A | N | N1 | H1 | H2 | L1 | B | S | Bolt size mm / inch | Bearing number 2) |
|---|---|---|---|---|---|---|---|---|---|---|---|---|---|---|
| 12 | ASPL201 | 26.99 | 121 | 89 | 35 | 11 | 14 | 13 | 54 | 40 | 22 | 6 | M10 | AS201 |
| 1/2 | ASPL201-008 | 1 1/16 | 4 3/4 | 3 1/2 | 1 3/8 | 7/16 | 9/16 | 1/2 | 2 1/8 | 1 9/16 | 0.8661 | 0.236 | 3/8 | AS201-008 |
| 15 | ASPL202 | 26.99 | 121 | 89 | 35 | 11 | 14 | 13 | 54 | 40 | 22 | 6 | M10 | AS202 |
| 9/16 | ASPL202-009 | 1 1/16 | 4 3/4 | 3 1/2 | 1 3/8 | 7/16 | 9/16 | 1/2 | 2 1/8 | 1 9/16 | 0.8661 | 0.236 | 3/8 | AS202-009 |
| 5/8 | ASPL202-010 | | | | | | | | | | | | | AS202-010 |
| 17 | ASPL203 | 26.99 | 121 | 89 | 35 | 11 | 14 | 13 | 54 | 40 | 22 | 6 | M10 | AS203 |
| 11/16 | ASPL203-011 | 1 1/16 | 4 3/4 | 3 1/2 | 1 3/8 | 7/16 | 9/16 | 1/2 | 2 1/8 | 1 9/16 | 0.8661 | 0.236 | 3/8 | AS203-011 |
| 20 | ASPL204 | 31.75 | 127 | 95 | 38 | 13 | 16 | 14 | 64 | 42 | 25 | 7 | M10 | AS204 |
| 3/4 | ASPL204-012 | 1 1/4 | 5 | 3 3/4 | 1 1/2 | 1/2 | 5/8 | 9/16 | 2 17/32 | 1 21/32 | 0.9843 | 0.276 | 3/8 | AS204-012 |
| 25 | ASPL205 | 33.34 | 140 | 105 | 38 | 13 | 16 | 15 | 68 | 42 | 27 | 7.5 | M10 | AS205 |
| 13/16 | ASPL205-013 | | | | | | | | | | | | | AS205-013 |
| 7/8 | ASPL205-014 | 1 5/16 | 5 1/2 | 4 1/8 | 1 1/2 | 1/2 | 5/8 | 19/32 | 2 11/16 | 1 21/32 | 1.0630 | 0.295 | 3/8 | AS205-014 |
| 15/16 | ASPL205-015 | | | | | | | | | | | | | AS205-015 |
| 1 | ASPL205-100 | | | | | | | | | | | | | AS205-100 |
| 30 | ASPL206 | 39.69 | 165 | 121 | 48 | 17 | 20 | 17 | 80 | 54 | 29 | 8 | M14 | AS206 |
| 1 1/16 | ASPL206-101 | | | | | | | | | | | | | AS206-101 |
| 1 1/8 | ASPL206-102 | 1 9/16 | 6 1/2 | 4 3/4 | 1 7/8 | 21/32 | 25/32 | 21/32 | 3 5/32 | 2 1/8 | 1.1417 | 0.315 | 1/2 | AS206-102 |
| 1 3/16 | ASPL206-103 | | | | | | | | | | | | | AS206-103 |
| 1 1/4 | ASPL206-104 | | | | | | | | | | | | | AS206-104 |
| 35 | ASPL207 | 46.04 | 167 | 127 | 48 | 17 | 20 | 18 | 91 | 54 | 34 | 8.5 | M14 | AS207 |
| 1 1/4 | ASPL207-104 | | | | | | | | | | | | | AS207-104 |
| 1 5/16 | ASPL207-105 | 1 13/16 | 6 9/16 | 5 | 1 7/8 | 21/32 | 25/32 | 23/32 | 3 19/32 | 2 1/8 | 1.3386 | 0.335 | 1/2 | AS207-105 |
| 1 3/8 | ASPL207-106 | | | | | | | | | | | | | AS207-106 |
| 1 7/16 | ASPL207-107 | | | | | | | | | | | | | AS207-107 |
| 40 | ASP208 | 49.2 | 184 | 137 | 54 | 17 | 20 | 18 | 98 | 52 | 38 | 9 | M14 | AS208 |
| 1 1/2 | ASP208-108 | 1 15/16 | 7 1/4 | 5 13/32 | 2 1/8 | 21/32 | 25/32 | 23/32 | 3 27/32 | 2 1/16 | 1.4961 | 0.354 | 1/2 | AS208-108 |
| 1 9/16 | ASP208-109 | | | | | | | | | | | | | AS208-109 |

Remarks: 1) ASPL201 to ASPL205 has solid bases.
2) If relubricatable type is neede, please order with suffix "D1".
3) ASPL208 has the same dimension as ASP208.

| Housing [2] number | Mass of unit kg | lb |
|---|---|---|
| PL201 | 0.5 | |
| PL201 | | 1.1 |
| PL201 | 0.5 | |
| PL201 | | 1.1 |
| PL201 | | |
| PL201 | 0.5 | |
| PL201 | | 1.1 |
| PL204 | 0.7 | |
| PL204 | | 1.5 |
| PL205 | 0.8 | |
| PL205 | | |
| PL205 | | 1.8 |
| PL205 | | |
| PL205 | | |
| PL206 | 1.2 | |
| PL206 | | |
| PL206 | | 2.6 |
| PL206 | | |
| PL206 | | |
| PL207 | 1.5 | |
| PL207 | | |
| PL207 | | 3.3 |
| PL207 | | |
| PL207 | | |
| P208 | 1.8 | |
| P208 | | 4.0 |
| P208 | | |

## Pillow blocks cast housing low center height
## Set screw type

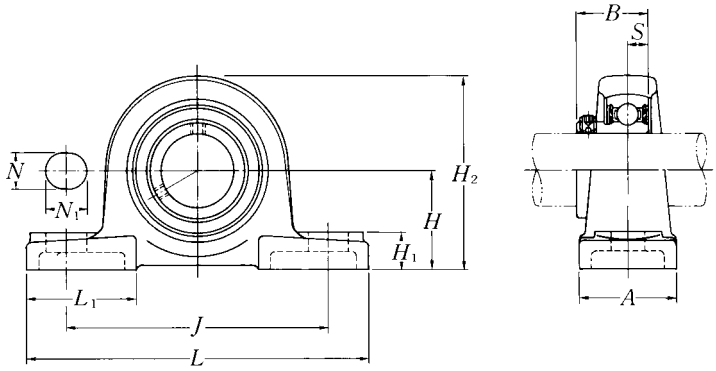


| Shaft dia. mm / inch | Unit number 1) 2) 3) | Nominal dimensions mm / inch H | L | J | A | N | N1 | H1 | H2 | L1 | B | S | Bolt size mm / inch | Bearing number 2) |
|---|---|---|---|---|---|---|---|---|---|---|---|---|---|---|
| **45** | **ASPL209** | 52.39 | 190 | 146 | 54 | 17 | 20 | 20 | 104 | 60 | 40 | 9.5 | M14 | AS209 |
| **1 5/8** | **ASPL209-110** | | | | | | | | | | | | | AS209-110 |
| **1 11/16** | **ASPL209-111** | 2 1/16 | 7 15/32 | 5 3/4 | 2 1/8 | 21/32 | 25/32 | 25/32 | 4 3/32 | 2 3/8 | 1.5748 | 0.374 | 1/2 | AS209-111 |
| **1 3/4** | **ASPL209-112** | | | | | | | | | | | | | AS209-112 |
| **50** | **ASPL210** | 55.56 | 206 | 159 | 60 | 20 | 23 | 21 | 112 | 65 | 42 | 10 | M16 | AS210 |
| **1 13/16** | **ASPL210-113** | | | | | | | | | | | | | AS210-113 |
| **1 7/8** | **ASPL210-114** | 2 3/16 | 8 1/8 | 6 1/4 | 2 3/8 | 25/32 | 29/32 | 13/16 | 4 13/32 | 2 9/16 | 1.6535 | 0.394 | 5/8 | AS210-114 |
| **1 15/16** | **ASPL210-115** | | | | | | | | | | | | | AS210-115 |
| **2** | **ASPL210-200** | | | | | | | | | | | | | AS210-200 |

Remarks: 1) ASPL201 to ASPL205 has solid bases.
2) If relubricatable type is neede, please order with suffix "D1".
3) ASPL208 has the same dimension as ASP208.

| Housing [2] number | Mass of unit kg | lb |
|---|---|---|
| PL209 | 2.0 | |
| PL209 | | |
| PL209 | 4.4 | |
| PL209 | | |
| PL210 | 2.6 | |
| PL210 | | |
| PL210 | 5.7 | |
| PL210 | | |
| PL210 | | |

## Pillow blocks pressed steel housing
## Set screw type

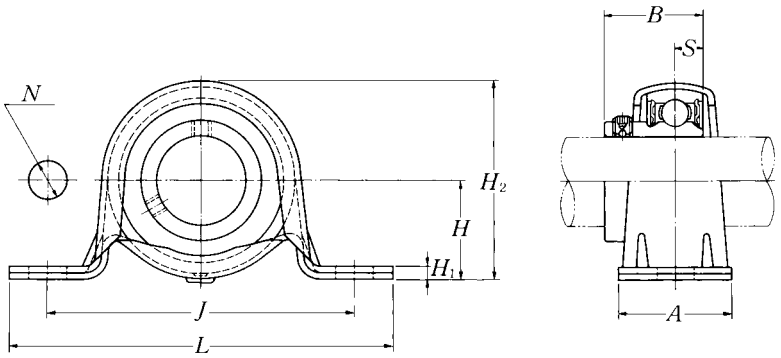


| Shaft dia. mm / inch | Unit number | Nominal dimensions H | L | J | A | N | H1 | H2 | B | S | Bolt size mm / inch | Bearing number | Housing number | Mass of unit kg / lb |
|---|---|---|---|---|---|---|---|---|---|---|---|---|---|---|
| | | | | | mm | | inch | | | | | | | |
| 12 | ASPP201 | 22.2 | 86 | 68 | 25 | 9.5 | 3.2 | 43.8 | 22 | 6 | M 8 | AS201 | PP203 | 0.2 |
| 1/2 | ASPP201-008 | 7/8 | 3 3/8 | 2 11/16 | 31/32 | 3/8 | 0.126 | 1 23/32 | 0.8661 | 0.236 | 5/16 | AS201-008 | PP203 | 0.4 |
| 15 | ASPP202 | 22.2 | 86 | 68 | 25 | 9.5 | 3.2 | 43.8 | 22 | 6 | M 8 | AS202 | PP203 | 0.2 |
| 9/16 | ASPP202-009 | 7/8 | 3 3/8 | 2 11/16 | 31/32 | 3/8 | 0.126 | 1 23/32 | 0.8661 | 0.236 | 5/16 | AS202-009 | PP203 | 0.4 |
| 5/8 | ASPP202-010 | | | | | | | | | | | AS202-010 | PP203 | |
| 17 | ASPP203 | 22.2 | 86 | 68 | 25 | 9.5 | 3.2 | 43.8 | 22 | 6 | M 8 | AS203 | PP203 | 0.1 |
| 11/16 | ASPP203-011 | 7/8 | 3 3/8 | 2 11/16 | 31/32 | 3/8 | 0.126 | 1 23/32 | 0.8661 | 0.236 | 5/16 | AS203-011 | PP203 | 0.2 |
| 20 | ASPP204 | 25.4 | 98 | 76 | 32 | 9.5 | 3.2 | 50.5 | 25 | 7 | M 8 | AS204 | PP204 | 0.2 |
| 3/4 | ASPP204-012 | 1 | 3 27/32 | 3 | 1 1/4 | 3/8 | 0.126 | 2 | 0.9843 | 0.276 | 5/16 | AS204-012 | PP204 | 0.4 |
| 25 | ASPP205 | 28.6 | 108 | 86 | 32 | 11.5 | 4 | 56.6 | 27 | 7.5 | M10 | AS205 | PP205 | 0.3 |
| 13/16 | ASPP205-013 | | | | | | | | | | | AS205-013 | PP205 | |
| 7/8 | ASPP205-014 | 1 1/8 | 4 1/4 | 3 3/8 | 1 1/4 | 29/64 | 0.157 | 2 7/32 | 1.0630 | 0.295 | 3/8 | AS205-014 | PP205 | 0.7 |
| 15/16 | ASPP205-015 | | | | | | | | | | | AS205-015 | PP205 | |
| 1 | ASPP205-100 | | | | | | | | | | | AS205-100 | PP205 | |
| 30 | ASPP206 | 33.3 | 117 | 95 | 38 | 11.5 | 4 | 66.3 | 29 | 8 | M10 | AS206 | PP206 | 0.4 |
| 1 1/16 | ASPP206-101 | | | | | | | | | | | AS206-101 | PP206 | |
| 1 1/8 | ASPP206-102 | 1 5/16 | 4 19/32 | 3 3/4 | 1 1/2 | 29/64 | 0.157 | 2 5/8 | 1.1417 | 0.315 | 3/8 | AS206-102 | PP206 | 0.9 |
| 1 3/16 | ASPP206-103 | | | | | | | | | | | AS206-103 | PP206 | |
| 1 1/4 | ASPP206-104 | | | | | | | | | | | AS206-104 | PP206 | |
| 35 | ASPP207 | 39.7 | 129 | 106 | 42 | 11.5 | 4.6 | 78 | 34 | 8.5 | M10 | AS207 | PP207 | 0.6 |
| 1 1/4 | ASPP207-104 | | | | | | | | | | | AS207-104 | PP207 | |
| 1 5/16 | ASPP207-105 | 1 9/16 | 5 3/32 | 4 3/16 | 1 21/32 | 29/64 | 0.181 | 3 1/16 | 1.3386 | 0.335 | 3/8 | AS207-105 | PP207 | 1.3 |
| 1 3/8 | ASPP207-106 | | | | | | | | | | | AS207-106 | PP207 | |
| 1 7/16 | ASPP207-107 | | | | | | | | | | | AS207-107 | PP207 | |

Remarks: 1) The permissible load only applies in applications where the load is stable and the speed is 2400 $min^{-1}$ or less.
The mounting surface should be flat.

| Max. load [1] recommended N lbf | |
|---|---|
| radial | axial |
| 2 000<br>440 | 800<br>160 |
| 2 000<br>440 | 800<br>160 |
| 2 000<br>440 | 800<br>160 |
| 2 500<br>550 | 1 000<br>200 |
| 3 500<br>770 | 1 400<br>280 |
| 4 000<br>880 | 1 600<br>320 |
| 4 500<br>990 | 1 800<br>360 |

## Pillow blocks pressed steel housing with rubber ring
## Set screw type

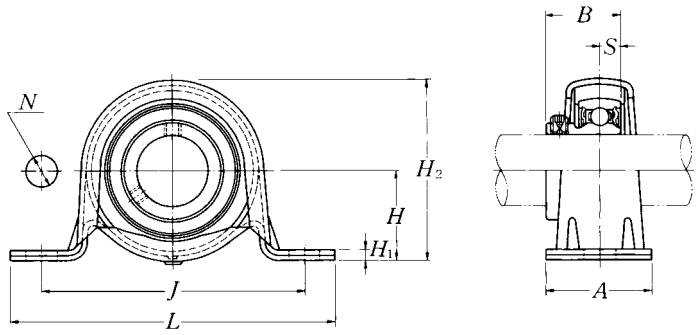


| Shaft dia. mm / inch | Unit number | Nominal dimensions H | L | J | A | N (mm / inch) | H1 | H2 | B | S | Bolt size mm / inch | Bearing number |
|---|---|---|---|---|---|---|---|---|---|---|---|---|
| **12** | **ASRPP201** | 25.4 | 98 | 76 | 32 | 9.5 | 3.2 | 50.5 | 22 | 6 | M 8 | AS201 |
| 1/2 | **ASRPP201-008** | 1 | 3 27/32 | 3 | 1 1/4 | 3/8 | 0.126 | 2 | 0.8661 | 0.236 | 5/16 | AS201-008 |
| **15** | **ASRPP202** | 25.4 | 98 | 76 | 32 | 9.5 | 3.2 | 50.5 | 22 | 6 | M 8 | AS202 |
| 9/16 | **ASRPP202-009** | 1 | 3 27/32 | 3 | 1 1/4 | 3/8 | 0.126 | 2 | 0.8661 | 0.236 | 5/16 | AS202-009 |
| 5/8 | **ASRPP202-010** | | | | | | | | | | | AS202-010 |
| **17** | **ASRPP203** | 25.4 | 98 | 76 | 32 | 9.5 | 3.2 | 50.5 | 22 | 6 | M 8 | AS203 |
| 11/16 | **ASRPP203-011** | 1 | 3 27/32 | 3 | 1 1/4 | 3/8 | 0.126 | 2 | 0.8661 | 0.236 | 5/16 | AS203-011 |
| **20** | **ASRPP204** | 28.6 | 108 | 86 | 32 | 11.5 | 4 | 56.6 | 25 | 7 | M10 | AS204 |
| 3/4 | **ASRPP204-012** | 1 1/8 | 4 1/4 | 3 3/8 | 1 1/4 | 29/64 | 0.157 | 2 7/32 | 0.9843 | 0.276 | 3/8 | AS204-012 |
| **25** | **ASRPP205** | 33.3 | 117 | 95 | 38 | 11.5 | 4 | 66.3 | 27 | 7.5 | M10 | AS205 |
| 13/16 | **ASRPP205-013** | | | | | | | | | | | AS205-013 |
| 7/8 | **ASRPP205-014** | 1 5/16 | 4 19/32 | 3 3/4 | 1 1/2 | 29/64 | 0.157 | 2 5/8 | 1.0630 | 0.295 | 3/8 | AS205-014 |
| 15/16 | **ASRPP205-015** | | | | | | | | | | | AS205-015 |
| **1** | **ASRPP205-100** | | | | | | | | | | | AS205-100 |
| **30** | **ASRPP206** | 39.7 | 129 | 106 | 42 | 11.5 | 4.6 | 78 | 29 | 8 | M10 | AS206 |
| 1 1/16 | **ASRPP206-101** | | | | | | | | | | | AS206-101 |
| 1 1/8 | **ASRPP206-102** | 1 9/16 | 5 3/32 | 4 3/16 | 1 21/32 | 29/64 | 0.181 | 3 1/16 | 1.1417 | 0.315 | 3/8 | AS206-102 |
| 1 3/16 | **ASRPP206-103** | | | | | | | | | | | AS206-103 |
| 1 1/4 | **ASRPP206-104** | | | | | | | | | | | AS206-104 |

Remarks: 1) The permissible load only applies in applications where the load is stable and the speed is 2400 $min^{-1}$ or less.
The mounting surface should be flat.
2) When an anti-vibration rubber ring is used, the self alignment capability will be reduce.

| Housing number | | Mass of unit | Max. load [1] recommended | |
|---|---|---|---|---|
| | | kg lb | N lbf | |
| rubber ring | steel | | radial | axial |
| R201 | PP204 | 0.2 | 1 000 | 200 |
| R201 | PP204 | 0.4 | 220 | 40 |
| R201 | PP204 | 0.2 | 1 000 | 200 |
| R201 | PP204 | 0.4 | 220 | 40 |
| R201 | PP204 | | | |
| R201 | PP204 | 0.2 | 1 000 | 200 |
| R201 | PP204 | 0.4 | 220 | 40 |
| R204 | PP205 | 0.3 | 1 150 | 200 |
| R204 | PP205 | 0.7 | 250 | 40 |
| R205 | PP206 | 0.4 | 1 300 | 200 |
| R205 | PP206 | | | |
| R205 | PP206 | 0.9 | 280 | 40 |
| R205 | PP206 | | | |
| R205 | PP206 | | | |
| R206 | PP207 | 0.5 | 1 500 | 200 |
| R206 | PP207 | | | |
| R206 | PP207 | 1.1 | 330 | 40 |
| R206 | PP207 | | | |
| R206 | PP207 | | | |

## Square flanged units cast housing
## Set screw type

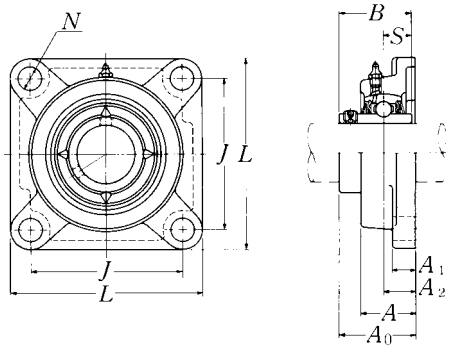


| Shaft dia. mm / inch | Unit number [1] | Nominal dimensions mm / inch L | J | A2 | A1 | A | N | A0 | B | S | Bolt size mm / inch | Bearing number |
|---|---|---|---|---|---|---|---|---|---|---|---|---|
| 12 | UCF201D1 | 86 | 64 | 15 | 11 | 25.5 | 12 | 33.3 | 31 | 12.7 | M10 | UC201D1 |
| 1/2 | UCF201-008D1 | 3 3/8 | 2 33/64 | 19/32 | 7/16 | 1 | 15/32 | 1 5/16 | 1.2205 | 0.500 | 3/8 | UC201-008D1 |
| 15 | UCF202D1 | 86 | 64 | 15 | 11 | 25.5 | 12 | 33.3 | 31 | 12.7 | M10 | UC202D1 |
| 9/16 | UCF202-009D1 | 3 3/8 | 2 33/64 | 19/32 | 7/16 | 1 | 15/32 | 1 5/16 | 1.2205 | 0.500 | 3/8 | UC202-009D1 |
| 5/8 | UCF202-010D1 | | | | | | | | | | | UC202-010D1 |
| 17 | UCF203D1 | 86 | 64 | 15 | 11 | 25.5 | 12 | 33.3 | 31 | 12.7 | M10 | UC203D1 |
| 11/16 | UCF203-011D1 | 3 3/8 | 2 33/64 | 19/32 | 7/16 | 1 | 15/32 | 1 5/16 | 1.2205 | 0.500 | 3/8 | UC203-011D1 |
| 20 | UCF204D1 | 86 | 64 | 15 | 11 | 25.5 | 12 | 33.3 | 31 | 12.7 | M10 | UC204D1 |
| 3/4 | UCF204-012D1 | 3 3/8 | 2 33/64 | 19/32 | 7/16 | 1 | 15/32 | 1 5/16 | 1.2205 | 0.500 | 3/8 | UC204-012D1 |
| 25 | UCF205D1 | 95 | 70 | 16 | 13 | 27 | 12 | 35.8 | 34.1 | 14.3 | M10 | UC205D1 |
| 13/16 | UCF205-013D1 | | | | | | | | | | | UC205-013D1 |
| 7/8 | UCF205-014D1 | 3 3/4 | 2 3/4 | 5/8 | 1/2 | 1 1/16 | 15/32 | 1 13/32 | 1.3425 | 0.563 | 3/8 | UC205-014D1 |
| 15/16 | UCF205-015D1 | | | | | | | | | | | UC205-015D1 |
| 1 | UCF205-100D1 | | | | | | | | | | | UC205-100D1 |
| 30 | UCF206D1 | 108 | 83 | 18 | 13 | 31 | 12 | 40.2 | 38.1 | 15.9 | M10 | UC206D1 |
| 1 1/16 | UCF206-101D1 | | | | | | | | | | | UC206-101D1 |
| 1 1/8 | UCF206-102D1 | 4 1/4 | 3 17/64 | 45/64 | 1/2 | 1 7/32 | 15/32 | 1 37/64 | 1.5000 | 0.626 | 3/8 | UC206-102D1 |
| 1 3/16 | UCF206-103D1 | | | | | | | | | | | UC206-103D1 |
| 1 1/4 | UCF206-104D1 | | | | | | | | | | | UC206-104D1 |
| 35 | UCF207D1 | 117 | 92 | 19 | 15 | 34 | 14 | 44.4 | 42.9 | 17.5 | M12 | UC207D1 |
| 1 1/4 | UCF207-104D1 | | | | | | | | | | | UC207-104D1 |
| 1 5/16 | UCF207-105D1 | 4 19/32 | 3 5/8 | 3/4 | 19/32 | 1 11/32 | 35/64 | 1 3/4 | 1.6890 | 0.689 | 7/16 | UC207-105D1 |
| 1 3/8 | UCF207-106D1 | | | | | | | | | | | UC207-106D1 |
| 1 7/16 | UCF207-107D1 | | | | | | | | | | | UC207-107D1 |
| 40 | UCF208D1 | 130 | 102 | 21 | 15 | 36 | 16 | 51.2 | 49.2 | 19 | M14 | UC208D1 |
| 1 1/2 | UCF208-108D1 | 5 1/8 | 4 1/64 | 53/64 | 19/32 | 1 13/32 | 5/8 | 2 1/64 | 1.9370 | 0.748 | 1/2 | UC208-108D1 |
| 1 9/16 | UCF208-109D1 | | | | | | | | | | | UC208-109D1 |
| 45 | UCF209D1 | 137 | 105 | 22 | 16 | 38 | 16 | 52.2 | 49.2 | 19 | M14 | UC209D1 |
| 1 5/8 | UCF209-110D1 | | | | | | | | | | | UC209-110D1 |
| 1 11/16 | UCF209-111D1 | 5 13/32 | 4 9/64 | 55/64 | 5/8 | 1 1/2 | 5/8 | 2 1/16 | 1.9370 | 0.748 | 1/2 | UC209-111D1 |
| 1 3/4 | UCF209-112D1 | | | | | | | | | | | UC209-112D1 |

Remarks: 1) These numbers indicate relubricatable type. If maintenance free type is needed, please order without suffix "D1".
Note: Please refer to page 36 for size of grease fitting.

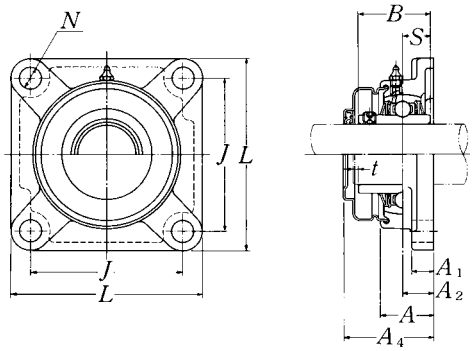


**Pressed steel dust cover type**
Open end: **S-UCF···D1**
Closed end: **SM-UCF···D1**

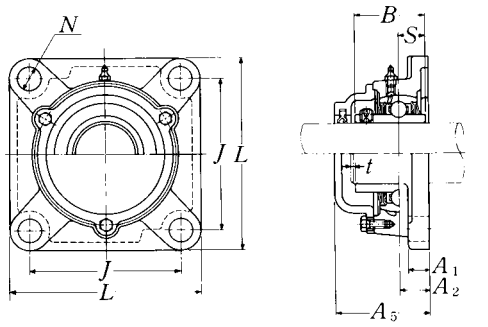


**Cast dust cover type**
Open end: **C-UCF···D1**
Closed end: **CM-UCF···D1**

| Housing [1] number | Unit number [1] pressed steel dust cover type | Unit number [1] cast dust cover type | Nominal dimensions mm / inch: $t$ max. | $A_4$ | $A_5$ | Mass of unit kg / lb: UCF | S(SM) | C(CM) |
|---|---|---|---|---|---|---|---|---|
| F204D1 | S(SM)-UCF201D1 | C(CM)-UCF201D1 | 2 | 40.5 | 46 | 0.6 | 0.6 | 0.8 |
| F204D1 | S(SM)-UCF201-008D1 | C(CM)-UCF201-008D1 | 5/64 | 1 19/32 | 1 13/16 | 1.3 | 1.3 | 1.8 |
| F204D1 | S(SM)-UCF202D1 | C(CM)-UCF202D1 | 2 | 40.5 | 46 | 0.6 | 0.6 | 0.8 |
| F204D1 | S(SM)-UCF202-009D1 | C(CM)-UCF202-009D1 | 5/64 | 1 19/32 | 1 13/16 | 1.3 | 1.3 | 1.8 |
| F204D1 | S(SM)-UCF202-010D1 | C(CM)-UCF202-010D1 | | | | | | |
| F204D1 | S(SM)-UCF203D1 | C(CM)-UCF203D1 | 2 | 40.5 | 46 | 0.6 | 0.6 | 0.8 |
| F204D1 | S(SM)-UCF203-011D1 | C(CM)-UCF203-011D1 | 5/64 | 1 19/32 | 1 13/16 | 1.3 | 1.3 | 1.8 |
| F204D1 | S(SM)-UCF204D1 | C(CM)-UCF204D1 | 2 | 40.5 | 46 | 0.6 | 0.6 | 0.7 |
| F204D1 | S(SM)-UCF204-012D1 | C(CM)-UCF204-012D1 | 5/64 | 1 19/32 | 1 13/16 | 1.3 | 1.3 | 1.8 |
| F205D1 | S(SM)-UCF205D1 | C(CM)-UCF205D1 | 2 | 44.5 | 51 | 0.8 | 0.8 | 0.9 |
| F205D1 | S(SM)-UCF205-013D1 | C(CM)-UCF205-013D1 | | | | | | |
| F205D1 | S(SM)-UCF205-014D1 | C(CM)-UCF205-014D1 | 5/64 | 1 3/4 | 2 | 1.8 | 1.8 | 2.0 |
| F205D1 | S(SM)-UCF205-015D1 | C(CM)-UCF205-015D1 | | | | | | |
| F205D1 | S(SM)-UCF205-100D1 | C(CM)-UCF205-100D1 | | | | | | |
| F206D1 | S(SM)-UCF206D1 | C(CM)-UCF206D1 | 2 | 49 | 56 | 1.1 | 1.1 | 1.3 |
| F206D1 | S(SM)-UCF206-101D1 | C(CM)-UCF206-101D1 | | | | | | |
| F206D1 | S(SM)-UCF206-102D1 | C(CM)-UCF206-102D1 | 5/64 | 1 15/16 | 2 7/32 | 2.4 | 2.4 | 2.9 |
| F206D1 | S(SM)-UCF206-103D1 | C(CM)-UCF206-103D1 | | | | | | |
| F206D1 | S(SM)-UCF206-104D1 | C(CM)-UCF206-104D1 | | | | | | |
| F207D1 | S(SM)-UCF207D1 | C(CM)-UCF207D1 | 3 | 55 | 59 | 1.5 | 1.5 | 1.8 |
| F207D1 | S(SM)-UCF207-104D1 | C(CM)-UCF207-104D1 | | | | | | |
| F207D1 | S(SM)-UCF207-105D1 | C(CM)-UCF207-105D1 | 1/8 | 2 5/32 | 2 5/16 | 3.3 | 3.3 | 4.0 |
| F207D1 | S(SM)-UCF207-106D1 | C(CM)-UCF207-106D1 | | | | | | |
| F207D1 | S(SM)-UCF207-107D1 | C(CM)-UCF207-107D1 | | | | | | |
| F208D1 | S(SM)-UCF208D1 | C(CM)-UCF208D1 | 3 | 62 | 66 | 1.7 | 1.8 | 2.2 |
| F208D1 | S(SM)-UCF208-108D1 | C(CM)-UCF208-108D1 | 1/8 | 2 7/16 | 2 19/32 | 3.8 | 4.0 | 4.9 |
| F208D1 | S(SM)-UCF208-109D1 | C(CM)-UCF208-109D1 | | | | | | |
| F209D1 | S(SM)-UCF209D1 | C(CM)-UCF209D1 | 3 | 63 | 70 | 2.1 | 2.2 | 2.6 |
| F209D1 | S(SM)-UCF209-110D1 | C(CM)-UCF209-110D1 | | | | | | |
| F209D1 | S(SM)-UCF209-111D1 | C(CM)-UCF209-111D1 | 1/8 | 2 15/32 | 2 3/4 | 4.6 | 4.9 | 5.7 |
| F209D1 | S(SM)-UCF209-112D1 | C(CM)-UCF209-112D1 | | | | | | |

## Square flanged units cast housing
## Set screw type

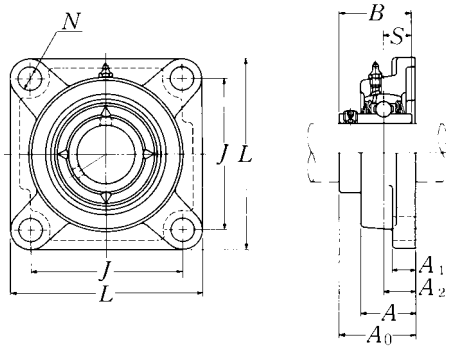


| Shaft dia. mm / inch | Unit number 1) | Nominal dimensions mm / inch L | J | A2 | A1 | A | N | A0 | B | S | Bolt size mm / inch | Bearing number |
|---|---|---|---|---|---|---|---|---|---|---|---|---|
| 50 | UCF210D1 | 143 | 111 | 22 | 16 | 40 | 16 | 54.6 | 51.6 | 19 | M14 | UC210D1 |
| 1 13/16 | UCF210-113D1 | | | | | | | | | | | UC210-113D1 |
| 1 7/8 | UCF210-114D1 | 5 5/8 | 4 3/8 | 55/64 | 5/8 | 1 9/16 | 5/8 | 2 5/32 | 2.0315 | 0.748 | 1/2 | UC210-114D1 |
| 1 15/16 | UCF210-115D1 | | | | | | | | | | | UC210-115D1 |
| 2 | UCF210-200D1 | | | | | | | | | | | UC210-200D1 |
| 55 | UCF211D1 | 162 | 130 | 25 | 18 | 43 | 19 | 58.4 | 55.6 | 22.2 | M16 | UC211D1 |
| 2 | UCF211-200D1 | | | | | | | | | | | UC211-200D1 |
| 2 1/16 | UCF211-201D1 | 6 3/8 | 5 1/8 | 63/64 | 23/32 | 1 11/16 | 3/4 | 2 19/64 | 2.1890 | 0.874 | 5/8 | UC211-201D1 |
| 2 1/8 | UCF211-202D1 | | | | | | | | | | | UC211-202D1 |
| 2 3/16 | UCF211-203D1 | | | | | | | | | | | UC211-203D1 |
| 60 | UCF212D1 | 175 | 143 | 29 | 18 | 48 | 19 | 68.7 | 65.1 | 25.4 | M16 | UC212D1 |
| 2 1/4 | UCF212-204D1 | | | | | | | | | | | UC212-204D1 |
| 2 5/16 | UCF212-205D1 | 6 7/8 | 5 5/8 | 1 9/64 | 23/32 | 1 7/8 | 3/4 | 2 45/64 | 2.5630 | 1.000 | 5/8 | UC212-205D1 |
| 2 3/8 | UCF212-206D1 | | | | | | | | | | | UC212-206D1 |
| 2 7/16 | UCF212-207D1 | | | | | | | | | | | UC212-207D1 |
| 65 | UCF213D1 | 187 | 149 | 30 | 22 | 50 | 19 | 69.7 | 65.1 | 25.4 | M16 | UC213D1 |
| 2 1/2 | UCF213-208D1 | 7 3/8 | 5 55/64 | 1 3/16 | 7/8 | 1 31/32 | 3/4 | 2 3/4 | 2.5630 | 1.000 | 5/8 | UC213-208D1 |
| 2 9/16 | UCF213-209D1 | | | | | | | | | | | UC213-209D1 |
| 70 | UCF214D1 | 193 | 152 | 31 | 22 | 54 | 19 | 75.4 | 74.6 | 30.2 | M16 | UC214D1 |
| 2 5/8 | UCF214-210D1 | | | | | | | | | | | UC214-210D1 |
| 2 11/16 | UCF214-211D1 | 7 19/32 | 5 63/64 | 1 7/32 | 7/8 | 2 1/8 | 3/4 | 2 31/32 | 2.9370 | 1.189 | 5/8 | UC214-211D1 |
| 2 3/4 | UCF214-212D1 | | | | | | | | | | | UC214-212D1 |
| 75 | UCF215D1 | 200 | 159 | 34 | 22 | 56 | 19 | 78.5 | 77.8 | 33.3 | M16 | UC215D1 |
| 2 13/16 | UCF215-213D1 | | | | | | | | | | | UC215-213D1 |
| 2 7/8 | UCF215-214D1 | 7 7/8 | 6 17/64 | 1 11/32 | 7/8 | 2 7/32 | 3/4 | 3 3/32 | 3.0630 | 1.311 | 5/8 | UC215-214D1 |
| 2 15/16 | UCF215-215D1 | | | | | | | | | | | UC215-215D1 |
| 3 | UCF215-300D1 | | | | | | | | | | | UC215-300D1 |
| 80 | UCF216D1 | 208 | 165 | 34 | 22 | 58 | 23 | 83.3 | 82.6 | 33.3 | M20 | UC216D1 |
| 3 1/16 | UCF216-301D1 | | | | | | | | | | | UC216-301D1 |
| 3 1/8 | UCF216-302D1 | 8 3/16 | 6 1/2 | 1 11/32 | 7/8 | 2 9/32 | 29/32 | 3 9/32 | 3.2520 | 1.311 | 3/4 | UC216-302D1 |
| 3 3/16 | UCF216-303D1 | | | | | | | | | | | UC216-303D1 |

Remarks: 1) These numbers indicate relubricatable type. If maintenance free type is needed, please order without suffix "D1".
Note: Please refer to page 36 for size of grease fitting.

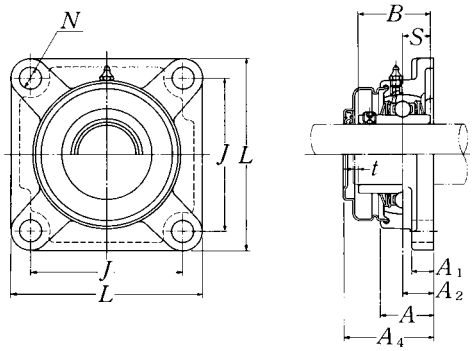


**Pressed steel dust cover type**
Open end: **S-UCF···D1**
Closed end: **SM-UCF···D1**

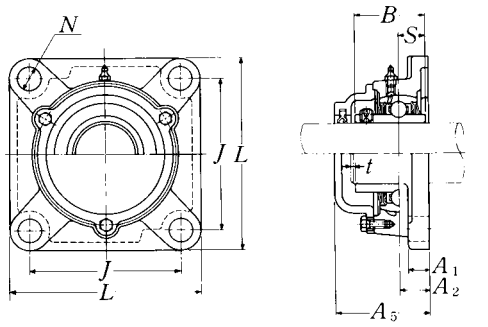


**Cast dust cover type**
Open end: **C-UCF···D1**
Closed end: **CM-UCF···D1**

| Housing [1] number | Unit number [1] pressed steel dust cover type | Unit number [1] cast dust cover type | Nominal dimensions mm / inch $t$ max. | $A_4$ | $A_5$ | Mass of unit kg / lb UCF | S(SM) | C(CM) |
|---|---|---|---|---|---|---|---|---|
| F210D1 | S(SM)-UCF210D1 | C(CM)-UCF210D1 | 3 | 65.5 | 72 | 2.5 | 2.5 | 3.0 |
| F210D1 | S(SM)-UCF210-113D1 | C(CM)-UCF210-113D1 | | | | | | |
| F210D1 | S(SM)-UCF210-114D1 | C(CM)-UCF210-114D1 | 1/8 | 2 19/32 | 2 27/32 | 5.5 | 5.5 | 6.6 |
| F210D1 | S(SM)-UCF210-115D1 | C(CM)-UCF210-115D1 | | | | | | |
| F210D1 | S(SM)-UCF210-200D1 | C(CM)-UCF210-200D1 | | | | | | |
| F211D1 | S(SM)-UCF211D1 | C(CM)-UCF211D1 | 4 | 71 | 75 | 3.3 | 3.4 | 4.0 |
| F211D1 | S(SM)-UCF211-200D1 | C(CM)-UCF211-200D1 | | | | | | |
| F211D1 | S(SM)-UCF211-201D1 | C(CM)-UCF211-201D1 | 5/32 | 2 25/32 | 2 15/16 | 7.3 | 7.5 | 8.8 |
| F211D1 | S(SM)-UCF211-202D1 | C(CM)-UCF211-202D1 | | | | | | |
| F211D1 | S(SM)-UCF211-203D1 | C(CM)-UCF211-203D1 | | | | | | |
| F212D1 | S(SM)-UCF212D1 | C(CM)-UCF212D1 | 4 | 80 | 86 | 3.9 | 4.1 | 4.8 |
| F212D1 | S(SM)-UCF212-204D1 | C(CM)-UCF212-204D1 | | | | | | |
| F212D1 | S(SM)-UCF212-205D1 | C(CM)-UCF212-205D1 | 5/32 | 3 25/32 | 3 3/8 | 8.6 | 9.0 | 11 |
| F212D1 | S(SM)-UCF212-206D1 | C(CM)-UCF212-206D1 | | | | | | |
| F212D1 | S(SM)-UCF212-207D1 | C(CM)-UCF212-207D1 | | | | | | |
| F213D1 | S(SM)-UCF213D1 | C(CM)-UCF213D1 | 4 | 83.5 | 90 | 5.5 | 5.6 | 6.4 |
| F213D1 | S(SM)-UCF213-208D1 | C(CM)-UCF213-208D1 | 5/32 | 3 9/32 | 3 17/32 | 12 | 12 | 14 |
| F213D1 | S(SM)-UCF213-209D1 | C(CM)-UCF213-209D1 | | | | | | |
| F214D1 | — | C(CM)-UCF214D1 | 4 | — | 98 | 6.3 | — | 7.4 |
| F214D1 | | C(CM)-UCF214-210D1 | | | | | | |
| F214D1 | — | C(CM)-UCF214-211D1 | 5/32 | — | 3 27/32 | 14 | — | 16 |
| F214D1 | | C(CM)-UCF214-212D1 | | | | | | |
| F215D1 | — | C(CM)-UCF215D1 | 4 | — | 102 | 6.6 | — | 7.9 |
| F215D1 | | C(CM)-UCF215-213D1 | | | | | | |
| F215D1 | — | C(CM)-UCF215-214D1 | 5/32 | — | 4 1/32 | 15 | — | 17 |
| F215D1 | | C(CM)-UCF215-215D1 | | | | | | |
| F215D1 | | C(CM)-UCF215-300D1 | | | | | | |
| F216D1 | — | C(CM)-UCF216D1 | 4 | — | 106 | 7.9 | — | 9.3 |
| F216D1 | | C(CM)-UCF216-301D1 | | | | | | |
| F216D1 | — | C(CM)-UCF216-302D1 | 5/32 | — | 4 3/16 | 17 | — | 21 |
| F216D1 | | C(CM)-UCF216-303D1 | | | | | | |

## Square flanged units cast housing
## Set screw type

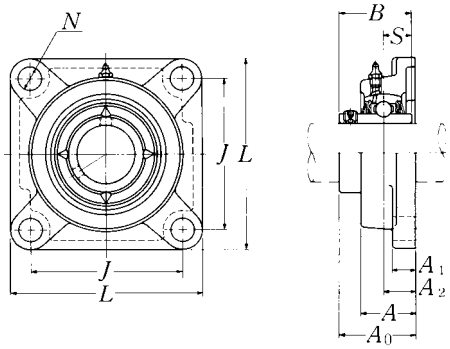


| Shaft dia. mm / inch | Unit number [1] | Nominal dimensions mm / inch L | J | A2 | A1 | A | N | A0 | B | S | Bolt size mm / inch | Bearing number |
|---|---|---|---|---|---|---|---|---|---|---|---|---|
| **85** | **UCF217D1** | 220 | 175 | 36 | 24 | 63 | 23 | 87.6 | 85.7 | 34.1 | M20 | UC217D1 |
| **3 1/4** | **UCF217-304D1** | | | | | | | | | | | UC217-304D1 |
| **3 5/16** | **UCF217-305D1** | 8 21/32 | 6 57/64 | 1 27/64 | 15/16 | 2 15/32 | 29/32 | 3 29/64 | 3.3740 | 1.343 | 3/4 | UC217-305D1 |
| **3 7/16** | **UCF217-307D1** | | | | | | | | | | | UC217-307D1 |
| **90** | **UCF218D1** | 235 | 187 | 40 | 24 | 68 | 23 | 96.3 | 96 | 39.7 | M20 | UC218D1 |
| **3 1/2** | **UCF218-308D1** | 9 1/4 | 7 23/64 | 1 37/64 | 15/16 | 2 11/16 | 29/32 | 3 51/64 | 3.7795 | 1.563 | 3/4 | UC218-308D1 |

Remarks: 1) These numbers indicate relubricatable type. If maintenance free type is needed, please order without suffix "D1".
Note: Please refer to page 36 for size of grease fitting.

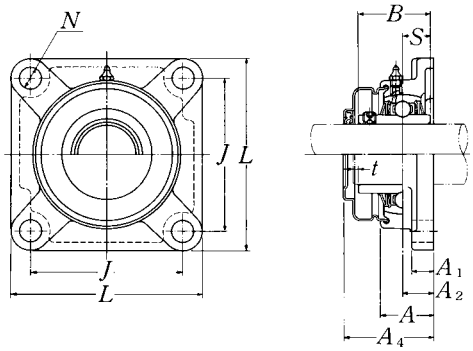


**Pressed steel dust cover type**
Open end: **S-UCF···D1**
Closed end: **SM-UCF···D1**

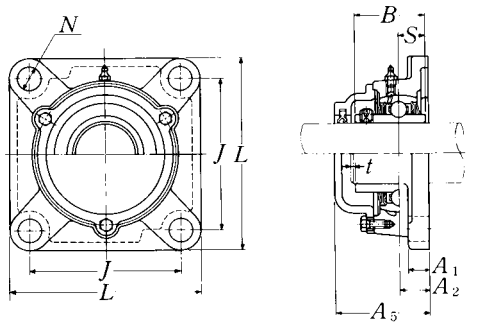


**Cast dust cover type**
Open end: **C-UCF···D1**
Closed end: **CM-UCF···D1**

| Housing [1] number | Unit number [1] pressed steel dust cover type | Unit number [1] cast dust cover type | Nominal dimensions mm / inch | | | Mass of unit kg / lb | | |
|---|---|---|---|---|---|---|---|---|
| | | | $t$ max. | $A_4$ | $A_5$ | UCF | S(SM) | C(CM) |
| F217D1 | — | C(CM)-UCF217D1 | 5 | — | 114 | 9.8 | — | 12 |
| F217D1 | — | C(CM)-UCF217-304D1 | 13/64 | — | 4 1/2 | 22 | — | 26 |
| F217D1 | | C(CM)-UCF217-305D1 | | | | | | |
| F217D1 | | C(CM)-UCF217-307D1 | | | | | | |
| F218D1 | — | C(CM)-UCF218D1 | 5 | — | 122 | 12 | — | 13 |
| F218D1 | — | C(CM)-UCF218-308D1 | 13/64 | — | 4 13/16 | 26 | — | 29 |

## Square flanged units cast housing
## Set screw type

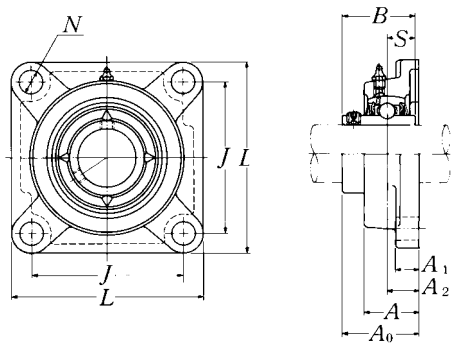


| Shaft dia. mm / inch | Unit number [1] | Nominal dimensions L | J | A2 | A1 | A | N | A0 | B | S | Bolt size mm / inch | Bearing number |
|---|---|---|---|---|---|---|---|---|---|---|---|---|
| | | mm | | | | | inch | | | | | |
| 25 | UCF305D1 | 110 | 80 | 16 | 13 | 29 | 16 | 39 | 38 | 15 | M14 | UC305D1 |
| 13/16 | UCF305-013D1 | | | | | | | | | | | UC305-013D1 |
| 7/8 | UCF305-014D1 | 4 11/32 | 3 5/32 | 5/8 | 1/2 | 1 5/32 | 5/8 | 1 17/32 | 1.4961 | 0.591 | 1/2 | UC305-014D1 |
| 15/16 | UCF305-015D1 | | | | | | | | | | | UC305-015D1 |
| 1 | UCF305-100D1 | | | | | | | | | | | UC305-100D1 |
| 30 | UCF306D1 | 125 | 95 | 18 | 15 | 32 | 16 | 44 | 43 | 17 | M14 | UC306D1 |
| 1 1/16 | UCF306-101D1 | | | | | | | | | | | UC306-101D1 |
| 1 1/8 | UCF306-102D1 | 4 29/32 | 3 47/64 | 45/64 | 19/32 | 1 1/4 | 5/8 | 1 47/64 | 1.6929 | 0.669 | 1/2 | UC306-102D1 |
| 1 3/16 | UCF306-103D1 | | | | | | | | | | | UC306-103D1 |
| 35 | UCF307D1 | 135 | 100 | 20 | 16 | 36 | 19 | 49 | 48 | 19 | M16 | UC307D1 |
| 1 1/4 | UCF307-104D1 | | | | | | | | | | | UC307-104D1 |
| 1 5/16 | UCF307-105D1 | 5 5/16 | 3 15/16 | 25/32 | 5/8 | 1 13/32 | 3/4 | 1 59/64 | 1.8898 | 0.748 | 5/8 | UC307-105D1 |
| 1 3/8 | UCF307-106D1 | | | | | | | | | | | UC307-106D1 |
| 1 7/16 | UCF307-107D1 | | | | | | | | | | | UC307-107D1 |
| 40 | UCF308D1 | 150 | 112 | 23 | 17 | 40 | 19 | 56 | 52 | 19 | M16 | UC308D1 |
| 1 1/2 | UCF308-108D1 | 5 29/32 | 4 13/32 | 29/32 | 21/32 | 1 9/16 | 3/4 | 2 13/64 | 2.0472 | 0.748 | 5/8 | UC308-108D1 |
| 1 9/16 | UCF308-109D1 | | | | | | | | | | | UC308-109D1 |
| 45 | UCF309D1 | 160 | 125 | 25 | 18 | 44 | 19 | 60 | 57 | 22 | M16 | UC309D1 |
| 1 5/8 | UCF309-110D1 | | | | | | | | | | | UC309-110D1 |
| 1 11/16 | UCF309-111D1 | 6 5/16 | 4 59/64 | 63/64 | 23/32 | 1 23/32 | 3/4 | 2 23/64 | 2.2441 | 0.866 | 5/8 | UC309-111D1 |
| 1 3/4 | UCF309-112D1 | | | | | | | | | | | UC309-112D1 |
| 50 | UCF310D1 | 175 | 132 | 28 | 19 | 48 | 23 | 67 | 61 | 22 | M20 | UC310D1 |
| 1 13/16 | UCF310-113D1 | | | | | | | | | | | UC310-113D1 |
| 1 7/8 | UCF310-114D1 | 6 7/8 | 5 13/64 | 1 7/64 | 3/4 | 1 7/8 | 29/32 | 2 41/64 | 2.4016 | 0.866 | 3/4 | UC310-114D1 |
| 1 15/16 | UCF310-115D1 | | | | | | | | | | | UC310-115D1 |
| 55 | UCF311D1 | 185 | 140 | 30 | 20 | 52 | 23 | 71 | 66 | 25 | M20 | UC311D1 |
| 2 | UCF311-200D1 | | | | | | | | | | | UC311-200D1 |
| 2 1/16 | UCF311-201D1 | 7 9/32 | 5 33/64 | 1 3/16 | 25/32 | 2 1/16 | 29/32 | 2 51/64 | 2.5984 | 0.984 | 3/4 | UC311-201D1 |
| 2 1/8 | UCF311-202D1 | | | | | | | | | | | UC311-202D1 |
| 2 3/16 | UCF311-203D1 | | | | | | | | | | | UC311-203D1 |

Remarks: 1) These numbers indicate relubricatable type. If maintenance free type is needed, please order without suffix "D1".
Note: Please refer to page 36 for size of grease fitting.

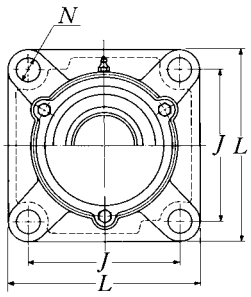


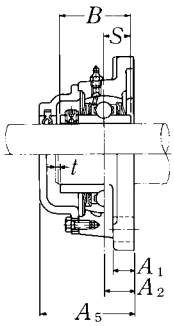


**Cast dust cover type**
Open end: **C-UCF···D1**
Closed end: **CM-UCF···D1**

| Housing [1] number | Unit number [1] cast dust cover type | Nominal dimensions mm $t$ max. | Nominal dimensions inch $A_5$ | Mass of unit kg UCF | Mass of unit lb C(CM) |
|---|---|---|---|---|---|
| F305D1 | C(CM)-UCF305D1 | 2 | 56 | 1.1 | 1.4 |
| F305D1 | C(CM)-UCF305-013D1 | | | | |
| F305D1 | C(CM)-UCF305-014D1 | 5/64 | 2 7/32 | 2.4 | 3.1 |
| F305D1 | C(CM)-UCF305-015D1 | | | | |
| F305D1 | C(CM)-UCF305-100D1 | | | | |
| F306D1 | C(CM)-UCF306D1 | 2 | 60 | 1.6 | 2.1 |
| F306D1 | C(CM)-UCF306-101D1 | | | | |
| F306D1 | C(CM)-UCF306-102D1 | 5/64 | 2 3/8 | 3.5 | 4.6 |
| F306D1 | C(CM)-UCF306-103D1 | | | | |
| F307D1 | C(CM)-UCF307D1 | 3 | 68 | 2.1 | 2.6 |
| F307D1 | C(CM)-UCF307-104D1 | | | | |
| F307D1 | C(CM)-UCF307-105D1 | 1/8 | 2 11/16 | 4.6 | 5.7 |
| F307D1 | C(CM)-UCF307-106D1 | | | | |
| F307D1 | C(CM)-UCF307-107D1 | | | | |
| F308D1 | C(CM)-UCF308D1 | 3 | 76 | 2.7 | 3.4 |
| F308D1 | C(CM)-UCF308-108D1 | 1/8 | 3 | 6.0 | 7.5 |
| F308D1 | C(CM)-UCF308-109D1 | | | | |
| F309D1 | C(CM)-UCF309D1 | 3 | 80 | 3.4 | 4.3 |
| F309D1 | C(CM)-UCF309-110D1 | | | | |
| F309D1 | C(CM)-UCF309-111D1 | 1/8 | 3 5/32 | 7.5 | 9.5 |
| F309D1 | C(CM)-UCF309-112D1 | | | | |
| F310D1 | C(CM)-UCF310D1 | 3 | 88 | 4.5 | 5.8 |
| F310D1 | C(CM)-UCF310-113D1 | | | | |
| F310D1 | C(CM)-UCF310-114D1 | 1/8 | 3 15/32 | 9.9 | 13 |
| F310D1 | C(CM)-UCF310-115D1 | | | | |
| F311D1 | C(CM)-UCF311D1 | 4 | 92 | 5.3 | 6.7 |
| F311D1 | C(CM)-UCF311-200D1 | | | | |
| F311D1 | C(CM)-UCF311-201D1 | 5/32 | 3 5/8 | 12 | 15 |
| F311D1 | C(CM)-UCF311-202D1 | | | | |
| F311D1 | C(CM)-UCF311-203D1 | | | | |

## Square flanged units cast housing
## Set screw type

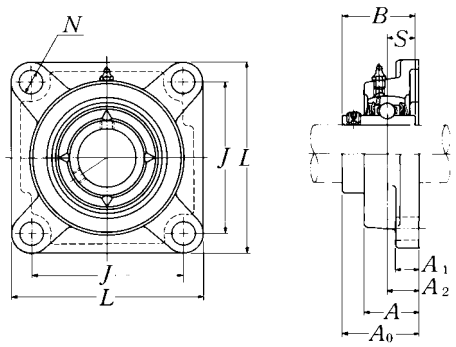


| Shaft dia. mm / inch | Unit number [1] | Nominal dimensions mm / inch L | J | A2 | A1 | A | N | A0 | B | S | Bolt size mm / inch | Bearing number |
|---|---|---|---|---|---|---|---|---|---|---|---|---|
| **60** | **UCF312D1** | 195 | 150 | 33 | 22 | 56 | 23 | 78 | 71 | 26 | M20 | UC312D1 |
| **2 1/4** | **UCF312-204D1** | | | | | | | | | | | UC312-204D1 |
| **2 5/16** | **UCF312-205D1** | 7 11/16 | 5 29/32 | 1 19/64 | 7/8 | 2 7/32 | 29/32 | 3 5/64 | 2.7953 | 1.024 | 3/4 | UC312-205D1 |
| **2 3/8** | **UCF312-206D1** | | | | | | | | | | | UC312-206D1 |
| **2 7/16** | **UCF312-207D1** | | | | | | | | | | | UC312-207D1 |
| **65** | **UCF313D1** | 208 | 166 | 33 | 22 | 58 | 23 | 78 | 75 | 30 | M20 | UC313D1 |
| **2 1/2** | **UCF313-208D1** | 8 3/16 | 6 17/32 | 1 19/64 | 7/8 | 2 9/32 | 29/32 | 3 5/64 | 2.9528 | 1.181 | 3/4 | UC313-208D1 |
| **2 9/16** | **UCF313-209D1** | | | | | | | | | | | UC313-209D1 |
| **70** | **UCF314D1** | 226 | 178 | 36 | 25 | 61 | 25 | 81 | 78 | 33 | M22 | UC314D1 |
| **2 5/8** | **UCF314-210D1** | | | | | | | | | | | UC314-210D1 |
| **2 11/16** | **UCF314-211D1** | 8 29/32 | 6 1/64 | 1 27/64 | 31/32 | 2 13/32 | 63/64 | 3 3/16 | 3.0709 | 1.299 | 7/8 | UC314-211D1 |
| **2 3/4** | **UCF314-212D1** | | | | | | | | | | | UC314-212D1 |
| **75** | **UCF315D1** | 236 | 184 | 39 | 25 | 66 | 25 | 89 | 82 | 32 | M22 | UC315D1 |
| **2 13/16** | **UCF315-213D1** | | | | | | | | | | | UC315-213D1 |
| **2 7/8** | **UCF315-214D1** | 9 9/32 | 7 1/4 | 1 17/32 | 31/32 | 2 19/32 | 63/64 | 3 1/2 | 3.2283 | 1.260 | 7/8 | UC315-214D1 |
| **2 15/16** | **UCF315-215D1** | | | | | | | | | | | UC315-215D1 |
| **3** | **UCF315-300D1** | | | | | | | | | | | UC315-300D1 |
| **80** | **UCF316D1** | 250 | 196 | 38 | 27 | 68 | 31 | 90 | 86 | 34 | M27 | UC316D1 |
| **3 1/16** | **UCF316-301D1** | | | | | | | | | | | UC316-301D1 |
| **3 1/8** | **UCF316-302D1** | 9 27/32 | 7 23/32 | 1 1/2 | 1 1/16 | 2 11/16 | 1 7/32 | 3 35/64 | 3.3858 | 1.339 | 1 | UC316-302D1 |
| **3 3/16** | **UCF316-303D1** | | | | | | | | | | | UC316-303D1 |
| **85** | **UCF317D1** | 260 | 204 | 44 | 27 | 74 | 31 | 100 | 96 | 40 | M27 | UC317D1 |
| **3 1/4** | **UCF317-304D1** | | | | | | | | | | | UC317-304D1 |
| **3 5/16** | **UCF317-305D1** | 10 1/4 | 8 1/32 | 1 47/64 | 1 1/16 | 2 29/32 | 1 7/32 | 3 15/16 | 3.7795 | 1.575 | 1 | UC317-305D1 |
| **3 7/16** | **UCF317-307D1** | | | | | | | | | | | UC317-307D1 |
| **90** | **UCF318D1** | 280 | 216 | 44 | 30 | 76 | 35 | 100 | 96 | 40 | M30 | UC318D1 |
| **3 7/16** | **UCF318-307D1** | 11 1/32 | 8 1/2 | 1 47/64 | 1 3/16 | 3 | 1 3/8 | 3 15/16 | 3.7795 | 1.575 | 1 1/8 | UC318-307D1 |
| **3 1/2** | **UCF318-308D1** | | | | | | | | | | | UC318-308D1 |

Remarks: 1) These numbers indicate relubricatable type. If maintenance free type is needed, please order without suffix "D1".
Note: Please refer to page 36 for size of grease fitting.

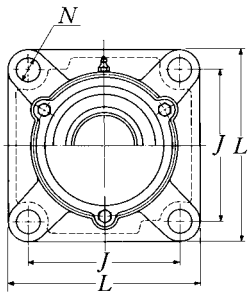


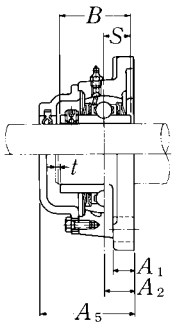


**Cast dust cover type**
Open end: **C-UCF···D1**
Closed end: **CM-UCF···D1**

| Housing [1] number | Unit number [1] cast dust cover type | Nominal dimensions mm $t$ max. | Nominal dimensions inch $A_5$ | Mass of unit kg UCF | Mass of unit lb C(CM) |
|---|---|---|---|---|---|
| F312D1 | C(CM)-UCF312D1 | 4 | 100 | 6.3 | 7.8 |
| F312D1 | C(CM)-UCF312-204D1 | 5/32 | 3 15/16 | 14 | 17 |
| F312D1 | C(CM)-UCF312-205D1 | | | | |
| F312D1 | C(CM)-UCF312-206D1 | | | | |
| F312D1 | C(CM)-UCF312-207D1 | | | | |
| F313D1 | C(CM)-UCF313D1 | 4 | 103 | 8.0 | 9.7 |
| F313D1 | C(CM)-UCF313-208D1 | 5/32 | 4 1/16 | 18 | 21 |
| F313D1 | C(CM)-UCF313-209D1 | | | | |
| F314D1 | C(CM)-UCF314D1 | 4 | 106 | 9.4 | 11 |
| F314D1 | C(CM)-UCF314-210D1 | 5/32 | 4 3/16 | 21 | 24 |
| F314D1 | C(CM)-UCF314-211D1 | | | | |
| F314D1 | C(CM)-UCF314-212D1 | | | | |
| F315D1 | C(CM)-UCF315D1 | 4 | 114 | 11 | 13 |
| F315D1 | C(CM)-UCF315-213D1 | 5/32 | 4 1/2 | 24 | 29 |
| F315D1 | C(CM)-UCF315-214D1 | | | | |
| F315D1 | C(CM)-UCF315-215D1 | | | | |
| F315D1 | C(CM)-UCF315-300D1 | | | | |
| F316D1 | C(CM)-UCF316D1 | 4 | 116 | 14 | 16 |
| F316D1 | C(CM)-UCF316-301D1 | 5/32 | 4 9/16 | 31 | 35 |
| F316D1 | C(CM)-UCF316-302D1 | | | | |
| F316D1 | C(CM)-UCF316-303D1 | | | | |
| F317D1 | C(CM)-UCF317D1 | 5 | 129 | 15 | 19 |
| F317D1 | C(CM)-UCF317-304D1 | 13/64 | 5 3/32 | 33 | 42 |
| F317D1 | C(CM)-UCF317-305D1 | | | | |
| F317D1 | C(CM)-UCF317-307D1 | | | | |
| F318D1 | C(CM)-UCF318D1 | 5 | 129 | 19 | 23 |
| F318D1 | C(CM)-UCF318-307D1 | 13/64 | 5 3/32 | 42 | 51 |
| F318D1 | C(CM)-UCF318-308D1 | | | | |

## Square flanged units cast housing
## Set screw type

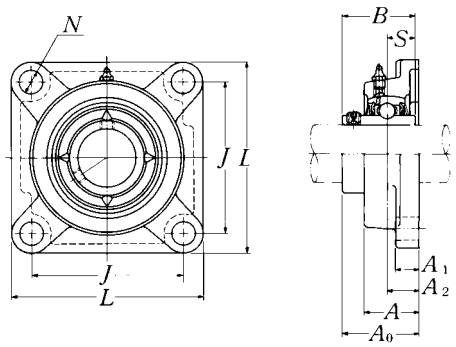


| Shaft dia. mm / inch | Unit number [1] | Nominal dimensions L | J | A2 | A1 | A | N | A0 | B | S | Bolt size mm / inch | Bearing number |
|---|---|---|---|---|---|---|---|---|---|---|---|---|
| | | mm | | | | | inch | | | | | |
| **95** | **UCF319D1** | 290 | 228 | 59 | 30 | 94 | 35 | 121 | 103 | 41 | M30 | UC319D1 |
| **3 5/8** | **UCF319-310D1** | | | | | | | | | | | UC319-310D1 |
| **3 11/16** | **UCF319-311D1** | 11 13/32 | 8 31/32 | 2 21/64 | 1 3/16 | 3 11/16 | 1 3/8 | 4 49/64 | 4.0551 | 1.614 | 1 1/8 | UC319-311D1 |
| **3 3/4** | **UCF319-312D1** | | | | | | | | | | | UC319-312D1 |
| **100** | **UCF320D1** | 310 | 242 | 59 | 32 | 94 | 38 | 125 | 108 | 42 | M33 | UC320D1 |
| **3 13/16** | **UCF320-313D1** | | | | | | | | | | | UC320-313D1 |
| **3 7/8** | **UCF320-314D1** | 12 7/32 | 9 17/32 | 2 21/64 | 1 1/4 | 3 11/16 | 1 1/2 | 4 59/64 | 4.2520 | 1.654 | 1 1/4 | UC320-314D1 |
| **3 15/16** | **UCF320-315D1** | | | | | | | | | | | UC320-315D1 |
| **4** | **UCF320-400D1** | | | | | | | | | | | UC320-400D1 |
| **105** | **UCF321D1** | 310 | 242 | 59 | 32 | 94 | 38 | 127 | 112 | 44 | M33 | UC321D1 |
| **110** | **UCF322D1** | 340 | 266 | 60 | 35 | 96 | 41 | 131 | 117 | 46 | M36 | UC322D1 |
| **120** | **UCF324D1** | 370 | 290 | 65 | 40 | 110 | 41 | 140 | 126 | 51 | M36 | UC324D1 |
| **130** | **UCF326D1** | 410 | 320 | 65 | 45 | 115 | 41 | 146 | 135 | 54 | M36 | UC326D1 |
| **140** | **UCF328D1** | 450 | 350 | 75 | 55 | 125 | 41 | 161 | 145 | 59 | M36 | UC328D1 |

Remarks: 1) These numbers indicate relubricatable type. If maintenance free type is needed, please order without suffix "D1".
Note: Please refer to page 36 for size of grease fitting.

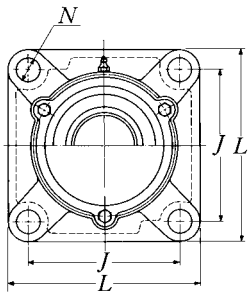


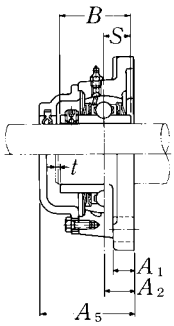


**Cast dust cover type**
Open end: **C-UCF···D1**
Closed end: **CM-UCF···D1**

| Housing [1] number | Unit number [1] cast dust cover type | Nominal dimensions | | Mass of unit | |
|---|---|---|---|---|---|
| | | mm | inch | kg | lb |
| | | $t$ max. | $A_5$ | UCF | C(CM) |
| F319D1 | C(CM)-UCF319D1 | 5 | 149 | 22 | 25 |
| F319D1 | C(CM)-UCF319-310D1 | | | | |
| F319D1 | C(CM)-UCF319-311D1 | 13/64 | 5 7/8 | 49 | 55 |
| F319D1 | C(CM)-UCF319-312D1 | | | | |
| F320D1 | C(CM)-UCF320D1 | 5 | 154 | 27 | 32 |
| F320D1 | C(CM)-UCF320-313D1 | | | | |
| F320D1 | C(CM)-UCF320-314D1 | 13/64 | 6 1/16 | 60 | 71 |
| F320D1 | C(CM)-UCF320-315D1 | | | | |
| F320D1 | C(CM)-UCF320-400D1 | | | | |
| F321D1 | C(CM)-UCF321D1 | 5 | 156 | 26 | 32 |
| F322D1 | C(CM)-UCF322D1 | 5 | 160 | 34 | 40 |
| F324D1 | C(CM)-UCF324D1 | 5 | 172 | 48 | 56 |
| F326D1 | C(CM)-UCF326D1 | 6 | 178 | 63 | 73 |
| F328D1 | C(CM)-UCF328D1 | 6 | 192 | 90 | 100 |

## Square flanged units cast housing
## Set screw type

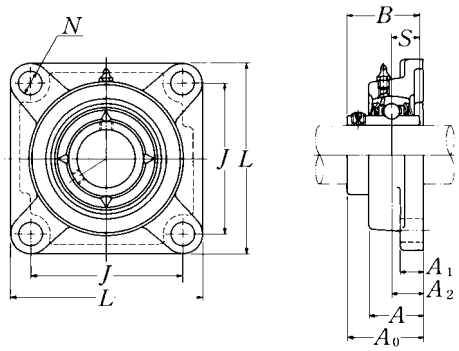


| Shaft dia. mm / inch | Unit number [1] | Nominal dimensions mm / inch L | J | A2 | A1 | A | N | A0 | B | S | Bolt size mm / inch | Bearing number |
|---|---|---|---|---|---|---|---|---|---|---|---|---|
| 25 | UCFX05D1 | 108 | 83 | 18 | 13 | 30 | 12 | 40.2 | 38.1 | 15.9 | M10 | UCX05D1 |
| 13/16 | UCFX05-013D1 | | | | | | | | | | | UCX05-013D1 |
| 7/8 | UCFX05-014D1 | 4 1/4 | 3 17/64 | 45/64 | 1/2 | 1 3/16 | 15/32 | 1 37/64 | 1.5000 | 0.626 | 3/8 | UCX05-014D1 |
| 15/16 | UCFX05-015D1 | | | | | | | | | | | UCX05-015D1 |
| 1 | UCFX05-100D1 | | | | | | | | | | | UCX05-100D1 |
| 30 | UCFX06D1 | 117 | 92 | 19 | 14 | 34 | 16 | 44.4 | 42.9 | 17.5 | M14 | UCX06D1 |
| 1 1/16 | UCFX06-101D1 | | | | | | | | | | | UCX06-101D1 |
| 1 1/8 | UCFX06-102D1 | 4 19/32 | 3 5/8 | 3/4 | 9/16 | 1 11/32 | 5/8 | 1 3/4 | 1.6890 | 0.689 | 1/2 | UCX06-102D1 |
| 1 3/16 | UCFX06-103D1 | | | | | | | | | | | UCX06-103D1 |
| 1 1/4 | UCFX06-104D1 | | | | | | | | | | | UC207-104D1 |
| 35 | UCFX07D1 | 130 | 102 | 21 | 14 | 38 | 16 | 51.2 | 49.2 | 19 | M14 | UCX07D1 |
| 1 5/16 | UCFX07-105D1 | | | | | | | | | | | UCX07-105D1 |
| 1 3/8 | UCFX07-106D1 | 5 1/8 | 4 1/64 | 53/64 | 9/16 | 1 1/2 | 5/8 | 2 1/64 | 1.9370 | 0.748 | 1/2 | UCX07-106D1 |
| 1 7/16 | UCFX07-107D1 | | | | | | | | | | | UCX07-107D1 |
| 40 | UCFX08D1 | 137 | 105 | 22 | 14 | 40 | 19 | 52.2 | 49.2 | 19 | M16 | UCX08D1 |
| 1 1/2 | UCFX08-108D1 | 5 13/32 | 4 9/64 | 55/64 | 9/16 | 1 9/16 | 3/4 | 2 1/16 | 1.9370 | 0.748 | 5/8 | UCX08-108D1 |
| 1 9/16 | UCFX08-109D1 | | | | | | | | | | | UCX08-109D1 |
| 45 | UCFX09D1 | 143 | 111 | 23 | 14 | 40 | 19 | 55.6 | 51.6 | 19 | M16 | UCX09D1 |
| 1 5/8 | UCFX09-110D1 | | | | | | | | | | | UCX09-110D1 |
| 1 11/16 | UCFX09-111D1 | 5 5/8 | 4 3/8 | 29/32 | 9/16 | 1 9/16 | 3/4 | 2 3/16 | 2.0315 | 0.748 | 5/8 | UCX09-111D1 |
| 1 3/4 | UCFX09-112D1 | | | | | | | | | | | UCX09-112D1 |
| 1 13/16 | UCFX09-113D1 | | | | | | | | | | | UC210-113D1 |
| 50 | UCFX10D1 | 162 | 130 | 26 | 20 | 44 | 19 | 59.4 | 55.6 | 22.2 | M16 | UCX10D1 |
| 1 7/8 | UCFX10-114D1 | | | | | | | | | | | UCX10-114D1 |
| 1 15/16 | UCFX10-115D1 | 6 3/8 | 5 1/8 | 1 1/32 | 25/32 | 1 23/32 | 3/4 | 2 11/32 | 2.1890 | 0.874 | 5/8 | UCX10-115D1 |
| 2 | UCFX10-200D1 | | | | | | | | | | | UC211-200D1 |

Remarks: 1) These numbers indicate relubricatable type. If maintenance free type is needed, please order without suffix "D1".
Note: Please refer to page 36 for size of grease fitting.

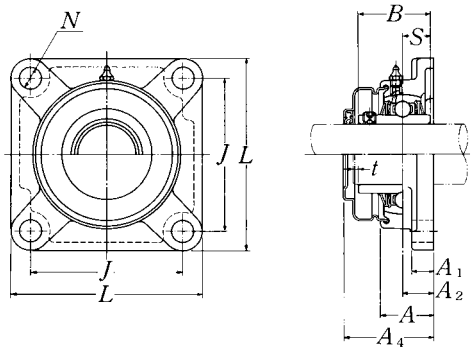


**Pressed steel dust cover type**
Open end: **S-UCFX···D1**
Closed end: **SM-UCFX···D1**

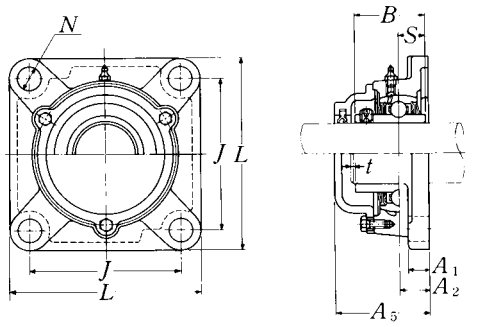


**Cast dust cover type**
Open end: **C-UCFX···D1**
Closed end: **CM-UCFX···D1**

| Housing number [1] | Unit number [1] pressed steel dust cover type | Unit number [1] cast dust cover type | Nominal dimensions mm | | inch | Mass of unit kg | | lb |
|---|---|---|---|---|---|---|---|---|
| | | | $t$ max. | $A_4$ | $A_5$ | UCFX | S(SM) | C(CM) |
| FX05D1 | S(SM)-UCFX05D1 | C(CM)-UCFX05D1 | 2 | 49 | 56 | 1.1 | 1.2 | 1.3 |
| FX05D1 | S(SM)-UCFX05-013D1 | C(CM)-UCFX05-013D1 | | | | | | |
| FX05D1 | S(SM)-UCFX05-014D1 | C(CM)-UCFX05-014D1 | 5/64 | 1 15/16 | 2 7/32 | 2.4 | 2.7 | 2.9 |
| FX05D1 | S(SM)-UCFX05-015D1 | C(CM)-UCFX05-015D1 | | | | | | |
| FX05D1 | S(SM)-UCFX05-100D1 | C(CM)-UCFX05-100D1 | | | | | | |
| FX06D1 | S(SM)-UCFX06D1 | C(CM)-UCFX06D1 | 2 | 55 | 59 | 1.7 | 1.8 | 1.9 |
| FX06D1 | S(SM)-UCFX06-101D1 | C(CM)-UCFX06-101D1 | | | | | | |
| FX06D1 | S(SM)-UCFX06-102D1 | C(CM)-UCFX06-102D1 | 5/64 | 2 5/32 | 2 5/16 | 3.8 | 4.0 | 4.2 |
| FX06D1 | S(SM)-UCFX06-103D1 | C(CM)-UCFX06-103D1 | | | | | | |
| FX06D1 | S(SM)-UCFX06-104D1 | C(CM)-UCFX06-104D1 | | | | | | |
| FX07D1 | S(SM)-UCFX07D1 | C(CM)-UCFX07D1 | 3 | 62 | 66 | 2.1 | 2.2 | 2.5 |
| FX07D1 | S(SM)-UCFX07-105D1 | C(CM)-UCFX07-105D1 | | | | | | |
| FX07D1 | S(SM)-UCFX07-106D1 | C(CM)-UCFX07-106D1 | 1/8 | 2 7/16 | 2 19/32 | 4.6 | 4.9 | 5.5 |
| FX07D1 | S(SM)-UCFX07-107D1 | C(CM)-UCFX07-107D1 | | | | | | |
| FX08D1 | S(SM)-UCFX08D1 | C(CM)-UCFX08D1 | 3 | 63 | 70 | 2.3 | 2.4 | 2.7 |
| FX08D1 | S(SM)-UCFX08-108D1 | C(CM)-UCFX08-108D1 | 1/8 | 2 15/32 | 2 3/4 | 5.1 | 5.3 | 6.0 |
| FX08D1 | S(SM)-UCFX08-109D1 | C(CM)-UCFX08-109D1 | | | | | | |
| FX09D1 | S(SM)-UCFX09D1 | C(CM)-UCFX09D1 | 3 | 65.5 | 73 | 2.5 | 2.6 | 3.0 |
| FX09D1 | S(SM)-UCFX09-110D1 | C(CM)-UCFX09-110D1 | | | | | | |
| FX09D1 | S(SM)-UCFX09-111D1 | C(CM)-UCFX09-111D1 | 1/8 | 2 19/32 | 2 7/8 | 5.5 | 5.7 | 6.6 |
| FX09D1 | S(SM)-UCFX09-112D1 | C(CM)-UCFX09-112D1 | | | | | | |
| FX09D1 | S(SM)-UCFX09-113D1 | C(CM)-UCFX09-113D1 | | | | | | |
| FX10D1 | S(SM)-UCFX10D1 | C(CM)-UCFX10D1 | 3 | 71 | 76 | 3.8 | 3.9 | 4.3 |
| FX10D1 | S(SM)-UCFX10-114D1 | C(CM)-UCFX10-114D1 | | | | | | |
| FX10D1 | S(SM)-UCFX10-115D1 | C(CM)-UCFX10-115D1 | 1/8 | 2 25/32 | 3 | 8.4 | 8.6 | 9.5 |
| FX10D1 | S(SM)-UCFX10-200D1 | C(CM)-UCFX10-200D1 | | | | | | |

## Square flanged units cast housing
## Set screw type

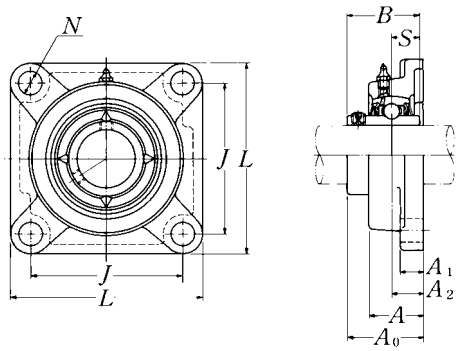


| Shaft dia. mm / inch | Unit number [1] | Nominal dimensions L | J | A2 | A1 | A | N | A0 | B | S | Bolt size mm / inch | Bearing number |
|---|---|---|---|---|---|---|---|---|---|---|---|---|
| | | | | | mm | | inch | | | | | |
| 55 | UCFX11D1 | 175 | 143 | 29 | 20 | 49 | 19 | 68.7 | 65.1 | 25.4 | M16 | UCX11D1 |
| 2 1/16 | UCFX11-201D1 | | | | | | | | | | | UCX11-201D1 |
| 2 1/8 | UCFX11-202D1 | | | | | | | | | | | UCX11-202D1 |
| 2 3/16 | UCFX11-203D1 | 6 7/8 | 5 5/8 | 1 9/64 | 25/32 | 1 15/16 | 3/4 | 2 45/64 | 2.5630 | 1.000 | 5/8 | UCX11-203D1 |
| 2 1/4 | UCFX11-204D1 | | | | | | | | | | | UC212-204D1 |
| 2 5/16 | UCFX11-205D1 | | | | | | | | | | | UC212-205D1 |
| 60 | UCFX12D1 | 187 | 149 | 34 | 21 | 59 | 19 | 73.7 | 65.1 | 25.4 | M16 | UCX12D1 |
| 2 3/8 | UCFX12-206D1 | 7 3/8 | 5 55/64 | 1 11/32 | 13/16 | 2 5/16 | 3/4 | 2 29/32 | 2.5630 | 1.000 | 5/8 | UCX12-206D1 |
| 2 7/16 | UCFX12-207D1 | | | | | | | | | | | UCX12-207D1 |
| 65 | UCFX13D1 | 187 | 149 | 34 | 21 | 59 | 19 | 78.4 | 74.6 | 30.2 | M16 | UCX13D1 |
| 2 1/2 | UCFX13-208D1 | 7 3/8 | 5 55/64 | 1 11/32 | 13/16 | 2 5/16 | 3/4 | 3 3/32 | 2.9370 | 1.189 | 5/8 | UCX13-208D1 |
| 2 9/16 | UCFX13-209D1 | | | | | | | | | | | UCX13-209D1 |
| 70 | UCFX14D1 | 197 | 152 | 37 | 24 | 60 | 23 | 81.5 | 77.8 | 33.3 | M20 | UCX14D1 |
| 2 5/8 | UCFX14-210D1 | | | | | | | | | | | UCX14-210D1 |
| 2 11/16 | UCFX14-211D1 | 7 3/4 | 5 63/64 | 1 29/64 | 15/16 | 2 3/8 | 29/32 | 3 13/64 | 3.0630 | 1.311 | 3/4 | UCX14-211D1 |
| 2 3/4 | UCFX14-212D1 | | | | | | | | | | | UCX14-212D1 |
| 75 | UCFX15D1 | 197 | 152 | 40 | 24 | 68 | 23 | 89.3 | 82.6 | 33.3 | M20 | UCX15D1 |
| 2 13/16 | UCFX15-213D1 | | | | | | | | | | | UCX15-213D1 |
| 2 7/8 | UCFX15-214D1 | 7 3/4 | 5 63/64 | 1 37/64 | 15/16 | 2 11/16 | 29/32 | 3 33/64 | 3.2520 | 1.311 | 3/4 | UCX15-214D1 |
| 2 15/16 | UCFX15-215D1 | | | | | | | | | | | UCX15-215D1 |
| 3 | UCFX15-300D1 | | | | | | | | | | | UCX15-300D1 |
| 80 | UCFX16D1 | 214 | 171 | 40 | 24 | 70 | 23 | 91.6 | 85.7 | 34.1 | M20 | UCX16D1 |
| 3 1/16 | UCFX16-301D1 | | | | | | | | | | | UCX16-301D1 |
| 3 1/8 | UCFX16-302D1 | 8 7/16 | 6 47/64 | 1 37/64 | 15/16 | 2 3/4 | 29/32 | 3 39/64 | 3.3740 | 1.343 | 3/4 | UCX16-302D1 |
| 3 3/16 | UCFX16-303D1 | | | | | | | | | | | UCX16-303D1 |
| 3 1/4 | UCFX16-304D1 | | | | | | | | | | | UC217-304D1 |
| 85 | UCFX17D1 | 214 | 171 | 40 | 24 | 70 | 23 | 96.3 | 96 | 39.7 | M20 | UCX17D1 |
| 3 5/16 | UCFX17-305D1 | 8 7/16 | 6 47/64 | 1 37/64 | 15/16 | 2 3/4 | 29/32 | 3 51/64 | 3.7795 | 1.563 | 3/4 | UCX17-305D1 |
| 3 7/16 | UCFX17-307D1 | | | | | | | | | | | UCX17-307D1 |

Remarks: 1) These numbers indicate relubricatable type. If maintenance free type is needed, please order without suffix "D1".
Note: Please refer to page 36 for size of grease fitting.

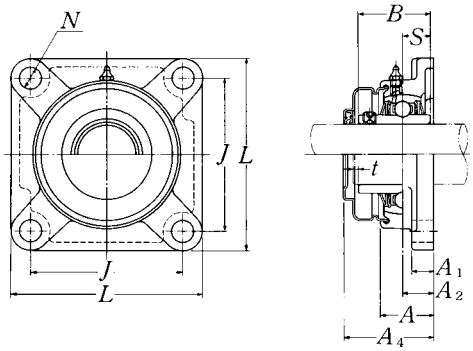


**Pressed steel dust cover type**
Open end: **S-UCFX···D1**
Closed end: **SM-UCFX···D1**

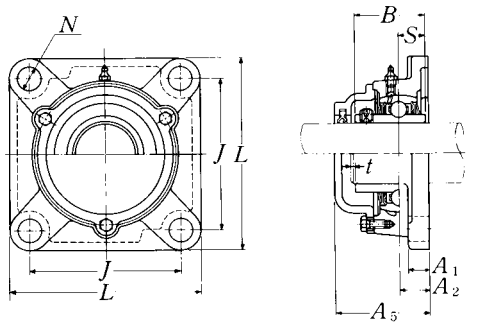


**Cast dust cover type**
Open end: **C-UCFX···D1**
Closed end: **CM-UCFX···D1**

| Housing [1] number | Unit number [1] pressed steel dust cover type | Unit number [1] cast dust cover type | Nominal dimensions mm t max. | Nominal dimensions mm $A_4$ | Nominal dimensions inch $A_5$ | Mass of unit kg UCFX | Mass of unit kg S(SM) | Mass of unit lb C(CM) |
|---|---|---|---|---|---|---|---|---|
| FX11D1 | S(SM)-UCFX11D1 | C(CM)-UCFX11D1 | 4 | 80 | 86 | 4.8 | 5.0 | 5.5 |
| FX11D1 | S(SM)-UCFX11-201D1 | C(CM)-UCFX11-201D1 | | | | | | |
| FX11D1 | S(SM)-UCFX11-202D1 | C(CM)-UCFX11-202D1 | | | | | | |
| FX11D1 | S(SM)-UCFX11-203D1 | C(CM)-UCFX11-203D1 | 5/32 | 3 25/32 | 3 3/8 | 11 | 11 | 12 |
| FX11D1 | S(SM)-UCFX11-204D1 | C(CM)-UCFX11-204D1 | | | | | | |
| FX11D1 | S(SM)-UCFX11-205D1 | C(CM)-UCFX11-205D1 | | | | | | |
| FX12D1 | S(SM)-UCFX12D1 | C(CM)-UCFX12D1 | 4 | 83.5 | 94 | 6.4 | 6.6 | 7.3 |
| FX12D1 | S(SM)-UCFX12-206D1 | C(CM)-UCFX12-206D1 | 5/32 | 3 9/32 | 3 11/16 | 14 | 15 | 16 |
| FX12D1 | S(SM)-UCFX12-207D1 | C(CM)-UCFX12-207D1 | | | | | | |
| FX13D1 | — | C(CM)-UCFX13D1 | 4 | — | 101 | 6.7 | — | 7.8 |
| FX13D1 | — | C(CM)-UCFX13-208D1 | 5/32 | — | 3 31/32 | 15 | — | 17 |
| FX13D1 | | C(CM)-UCFX13-209D1 | | | | | | |
| FX14D1 | — | C(CM)-UCFX14D1 | 4 | — | 105 | 7.1 | — | 8.3 |
| FX14D1 | | C(CM)-UCFX14-210D1 | | | | | | |
| FX14D1 | — | C(CM)-UCFX14-211D1 | 5/32 | — | 4 1/8 | 16 | — | 18 |
| FX14D1 | | C(CM)-UCFX14-212D1 | | | | | | |
| FX15D1 | — | C(CM)-UCFX15D1 | 4 | — | 112 | 8.6 | — | 9.9 |
| FX15D1 | | C(CM)-UCFX15-213D1 | | | | | | |
| FX15D1 | — | C(CM)-UCFX15-214D1 | 5/32 | — | 4 13/32 | 19 | — | 22 |
| FX15D1 | | C(CM)-UCFX15-215D1 | | | | | | |
| FX15D1 | | C(CM)-UCFX15-300D1 | | | | | | |
| FX16D1 | — | C(CM)-UCFX16D1 | 4 | — | 118 | 11 | — | 12 |
| FX16D1 | | C(CM)-UCFX16-301D1 | | | | | | |
| FX16D1 | — | C(CM)-UCFX16-302D1 | 5/32 | — | 4 21/32 | 24 | — | 26 |
| FX16D1 | | C(CM)-UCFX16-303D1 | | | | | | |
| FX16D1 | | C(CM)-UCFX16-304D1 | | | | | | |
| FX17D1 | — | C(CM)-UCFX17D1 | 5 | — | 122 | 12 | — | 14 |
| FX17D1 | — | C(CM)-UCFX17-305D1 | 13/64 | — | 4 13/16 | 26 | — | 31 |
| FX17D1 | | C(CM)-UCFX17-307D1 | | | | | | |

## Square flanged units cast housing
## Set screw type

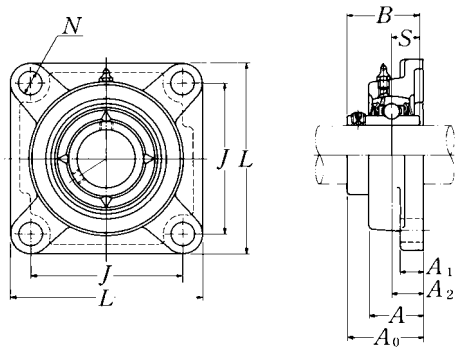


| Shaft dia. mm / inch | Unit number [1] | Nominal dimensions mm / inch L | J | A2 | A1 | A | N | A0 | B | S | Bolt size mm / inch | Bearing number |
|---|---|---|---|---|---|---|---|---|---|---|---|---|
| **90** | **UCFX18D1** | 214 | 171 | 45 | 24 | 76 | 23 | 106.1 | 104 | 42.9 | M20 | UCX18D1 |
| **3 7/16** | **UCFX18-307D1** | 8 7/16 | 6 47/64 | 1 49/64 | 15/16 | 3 | 29/32 | 4 11/64 | 4.0945 | 1.689 | 3/4 | UCX18-307D1 |
| **3 1/2** | **UCFX18-308D1** | | | | | | | | | | | UCX18-308D1 |
| **100** | **UCFX20D1** | 268 | 211 | 59 | 31 | 97 | 31 | 127.3 | 117.5 | 49.2 | M27 | UCX20D1 |
| **3 13/16** | **UCFX20-313D1** | | | | | | | | | | | UCX20-313D1 |
| **3 7/8** | **UCFX20-314D1** | 10 9/16 | 8 5/16 | 2 21/64 | 1 7/32 | 3 13/16 | 1 7/32 | 5 1/64 | 4.6260 | 1.937 | 1 | UCX20-314D1 |
| **3 15/16** | **UCFX20-315D1** | | | | | | | | | | | UCX20-315D1 |
| **4** | **UCFX20-400D1** | | | | | | | | | | | UCX20-400D1 |

Remarks: 1) These numbers indicate relubricatable type. If maintenance free type is needed, please order without suffix "D1".
Note: Please refer to page 36 for size of grease fitting.

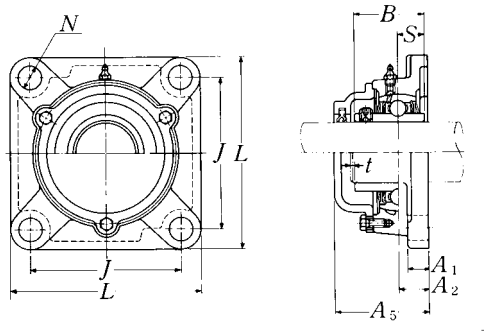


**Cast dust cover type**
Open end: **C-UCFX···D1**
Closed end: **CM-UCFX···D1**

| Housing [1] number | Unit number [1] cast dust cover type | Nominal dimensions | | Mass of unit | |
|---|---|---|---|---|---|
| | | mm<br>$t$<br>max. | inch<br>$A_5$ | kg<br>UCFX | lb<br>C(CM) |
| FX18D1 | **C(CM)-UCFX18D1** | 5 | 135 | 13 | 15 |
| FX18D1 | **C(CM)-UCFX18-307D1** | 13/64 | 5 5/16 | 29 | 33 |
| FX18D1 | **C(CM)-UCFX18-308D1** | | | | |
| FX20D1 | **C(CM)-UCFX20D1** | 5 | 146.5 | 21 | 23 |
| FX20D1 | **C(CM)-UCFX20-313D1** | | | | |
| FX20D1 | **C(CM)-UCFX20-314D1** | 13/64 | 5 49/64 | 46 | 51 |
| FX20D1 | **C(CM)-UCFX20-315D1** | | | | |
| FX20D1 | **C(CM)-UCFX20-400D1** | | | | |

## Square flanged units (Steel series)
## Set screw type

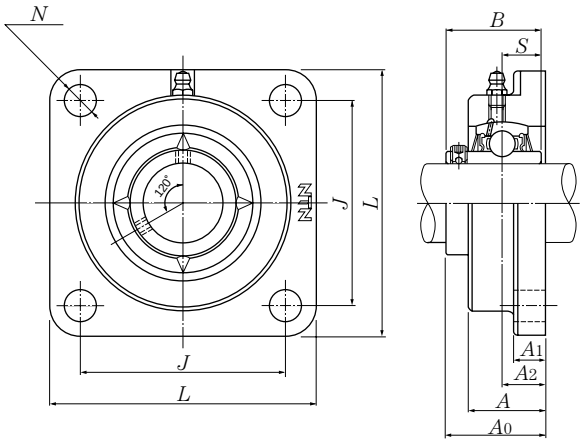


| Shaft dia. mm | Unit number [1] | Nominal dimensions mm | | | | | | | | | Bolt size mm | Bearing number |
|---|---|---|---|---|---|---|---|---|---|---|---|---|
| | | $L$ | $J$ | $A_2$ | $A_1$ | $A$ | $N$ | $A_0$ | $B$ | $S$ | | |
| **12** | **UCFG201D1** | 86 | 64 | 15 | 11 | 25.5 | 12 | 33.3 | 31 | 12.7 | M10 | UC201D1 |
| **15** | **UCFG202D1** | 86 | 64 | 15 | 11 | 25.5 | 12 | 33.3 | 31 | 12.7 | M10 | UC202D1 |
| **17** | **UCFG203D1** | 86 | 64 | 15 | 11 | 25.5 | 12 | 33.3 | 31 | 12.7 | M10 | UC203D1 |
| **20** | **UCFG204D1** | 86 | 64 | 15 | 11 | 25.5 | 12 | 33.3 | 31 | 12.7 | M10 | UC204D1 |
| **25** | **UCFG205D1** | 95 | 70 | 16 | 13 | 27 | 12 | 35.7 | 34 | 14.3 | M10 | UC205D1 |
| **30** | **UCFG206D1** | 108 | 83 | 18 | 13 | 31 | 12 | 40.2 | 38.1 | 15.9 | M10 | UC206D1 |
| **35** | **UCFG207D1** | 117 | 92 | 19 | 15 | 34 | 14 | 44.4 | 42.9 | 17.5 | M12 | UC207D1 |
| **40** | **UCFG208D1** | 130 | 102 | 21 | 15 | 36 | 16 | 51.2 | 49.2 | 19 | M14 | UC208D1 |
| **45** | **UCFG209D1** | 137 | 105 | 22 | 16 | 38 | 16 | 52.2 | 49.2 | 19 | M14 | UC209D1 |
| **50** | **UCFG210D1** | 143 | 111 | 22 | 16 | 40 | 16 | 54.6 | 51.6 | 19 | M14 | UC210D1 |
| **55** | **UCFG211D1** | 162 | 130 | 25 | 18 | 43 | 19 | 58.4 | 55.6 | 22.2 | M16 | UC211D1 |
| **60** | **UCFG212D1** | 175 | 143 | 29 | 18 | 48 | 19 | 68.7 | 65.1 | 25.4 | M16 | UC212D1 |
| **65** | **UCFG213D1** | 187 | 149 | 30 | 22 | 50 | 19 | 69.7 | 65.1 | 25.4 | M16 | UC213D1 |
| **70** | **UCFG214D1** | 193 | 152 | 31 | 22 | 54 | 19 | 75.4 | 74.6 | 30.2 | M16 | UC214D1 |
| **75** | **UCFG215D1** | 200 | 159 | 34 | 22 | 56 | 19 | 78.5 | 77.8 | 33.3 | M16 | UC215D1 |
| **80** | **UCFG216D1** | 208 | 165 | 34 | 22 | 58 | 23 | 83.3 | 82.6 | 33.3 | M20 | UC216D1 |
| **85** | **UCFG217D1** | 220 | 175 | 36 | 24 | 63 | 23 | 87.6 | 85.7 | 34.1 | M20 | UC217D1 |
| **90** | **UCFG218D1** | 235 | 187 | 40 | 24 | 68 | 23 | 96.3 | 96 | 39.7 | M20 | UC218D1 |

Remarks: 1) These numbers indicate relubricatable type. If maintenance free type is needed, please order without suffix "D1".
Note: Please refer to page 36 for size of grease fitting.

| Housing [1)] number | Mass of unit kg |
|---|---|
| FG204D1 | 0.8 |
| FG204D1 | 0.8 |
| FG204D1 | 0.8 |
| FG204D1 | 0.8 |
| FG205D1 | 1.0 |
| FG206D1 | 1.5 |
| FG207D1 | 2.0 |
| FG208D1 | 2.4 |
| FG209D1 | 2.8 |
| FG210D1 | 3.2 |
| FG211D1 | 4.6 |
| FG212D1 | 5.7 |
| FG213D1 | 7.4 |
| FG214D1 | 8.1 |
| FG215D1 | 9.0 |
| FG216D1 | 10 |
| FG217D1 | 12 |
| FG218D1 | 15 |

## Square flanged units (Steel series)
## Set screw type

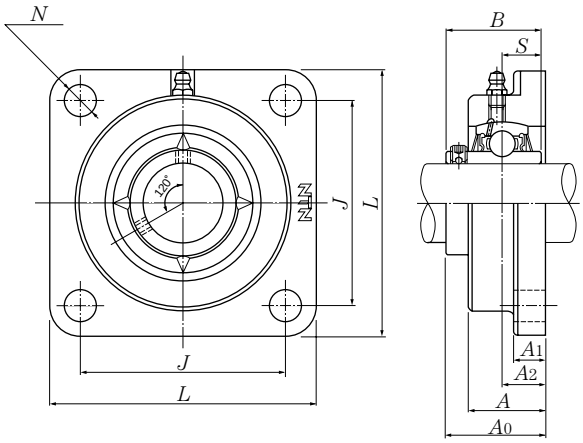


| Shaft dia. mm | Unit number [1] | Nominal dimensions mm | | | | | | | | | Bolt size mm | Bearing number |
|---|---|---|---|---|---|---|---|---|---|---|---|---|
| | | $L$ | $J$ | $A_2$ | $A_1$ | $A$ | $N$ | $A_0$ | $B$ | $S$ | | |
| **25** | **UCFG305D1** | 110 | 80 | 16 | 13 | 29 | 16 | 39 | 38 | 15 | M14 | UC305D1 |
| **30** | **UCFG306D1** | 125 | 95 | 18 | 15 | 32 | 16 | 44 | 43 | 17 | M14 | UC306D1 |
| **35** | **UCFG307D1** | 135 | 100 | 20 | 16 | 36 | 19 | 49 | 48 | 19 | M16 | UC307D1 |
| **40** | **UCFG308D1** | 150 | 112 | 23 | 17 | 40 | 19 | 56 | 52 | 19 | M16 | UC308D1 |
| **45** | **UCFG309D1** | 160 | 125 | 25 | 18 | 44 | 19 | 60 | 57 | 22 | M16 | UC309D1 |
| **50** | **UCFG310D1** | 175 | 132 | 28 | 19 | 48 | 23 | 67 | 61 | 22 | M20 | UC310D1 |
| **55** | **UCFG311D1** | 185 | 140 | 30 | 20 | 52 | 23 | 71 | 66 | 25 | M20 | UC311D1 |
| **60** | **UCFG312D1** | 195 | 150 | 33 | 22 | 56 | 23 | 78 | 71 | 26 | M20 | UC312D1 |
| **65** | **UCFG313D1** | 208 | 166 | 33 | 22 | 58 | 23 | 78 | 75 | 30 | M20 | UC313D1 |
| **70** | **UCFG314D1** | 226 | 178 | 36 | 25 | 61 | 25 | 81 | 78 | 33 | M22 | UC314D1 |
| **75** | **UCFG315D1** | 236 | 184 | 39 | 25 | 66 | 25 | 89 | 82 | 32 | M22 | UC315D1 |
| **80** | **UCFG316D1** | 250 | 196 | 38 | 27 | 68 | 31 | 90 | 86 | 34 | M27 | UC316D1 |
| **85** | **UCFG317D1** | 260 | 204 | 44 | 27 | 74 | 31 | 100 | 96 | 40 | M27 | UC317D1 |
| **90** | **UCFG318D1** | 280 | 216 | 44 | 30 | 76 | 35 | 100 | 96 | 40 | M30 | UC318D1 |
| **95** | **UCFG319D1** | 290 | 228 | 59 | 30 | 94 | 35 | 121 | 103 | 41 | M30 | UC319D1 |
| **100** | **UCFG320D1** | 310 | 242 | 59 | 32 | 94 | 38 | 125 | 108 | 42 | M33 | UC320D1 |
| **105** | **UCFG321D1** | 310 | 242 | 59 | 32 | 94 | 38 | 127 | 112 | 44 | M33 | UC321D1 |
| **110** | **UCFG322D1** | 340 | 266 | 60 | 35 | 96 | 41 | 131 | 117 | 46 | M36 | UC322D1 |
| **120** | **UCFG324D1** | 370 | 290 | 65 | 40 | 110 | 41 | 140 | 126 | 51 | M36 | UC324D1 |
| **130** | **UCFG326D1** | 410 | 320 | 65 | 45 | 115 | 41 | 146 | 135 | 54 | M36 | UC326D1 |
| **140** | **UCFG328D1** | 450 | 350 | 75 | 55 | 125 | 41 | 161 | 145 | 59 | M36 | UC328D1 |

Remarks: 1) These numbers indicate relubricatable type. If maintenance free type is needed, please order without suffix "D1".
Note: Please refer to page 36 for size of grease fitting.

| Housing [1)] number | Mass of unit kg |
|---|---|
| FG305D1 | 1.6 |
| FG306D1 | 2.0 |
| FG307D1 | 2.8 |
| FG308D1 | 3.6 |
| FG309D1 | 5.0 |
| FG310D1 | 6.9 |
| FG311D1 | 8.8 |
| FG312D1 | 11 |
| FG313D1 | 12 |
| FG314D1 | 14 |
| FG315D1 | 18 |
| FG316D1 | 21 |
| FG317D1 | 23 |
| FG318D1 | 26 |
| FG319D1 | 33 |
| FG320D1 | 40 |
| FG321D1 | 41 |
| FG322D1 | 52 |
| FG324D1 | 64 |
| FG326D1 | 76 |
| FG328D1 | 98 |

## Square flanged units cast housing w/ spigot joint
## Set screw type

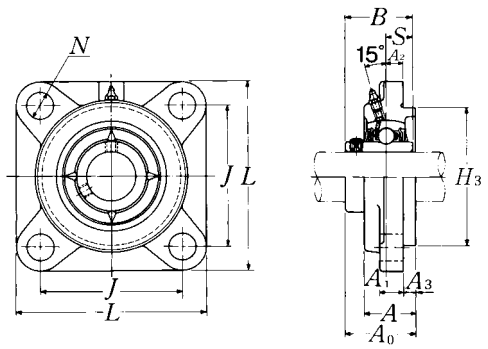


| Shaft dia. mm / inch | Unit number [1] | Nominal dimensions L | J | A2 | N | A3 | A1 (mm) | A (inch) | H3 | A0 | B | S | Bolt size mm / inch |
|---|---|---|---|---|---|---|---|---|---|---|---|---|---|
| 25 | UCFS305D1 | 110 | 80 | 9 | 16 | 7 | 13 | 29 | 80 | 39 | 38 | 15 | M14 |
| 13/16 | UCFS305-013D1 | | | | | | | | | | | | |
| 7/8 | UCFS305-014D1 | 4 11/32 | 3 5/32 | 23/64 | 5/8 | 9/32 | 1/2 | 1 9/64 | 3.1496 | 1 17/32 | 1.4961 | 0.591 | 1/2 |
| 15/16 | UCFS305-015D1 | | | | | | | | | | | | |
| 1 | UCFS305-100D1 | | | | | | | | | | | | |
| 30 | UCFS306D1 | 125 | 95 | 10 | 16 | 8 | 15 | 32 | 90 | 44 | 43 | 17 | M14 |
| 1 1/16 | UCFS306-101D1 | | | | | | | | | | | | |
| 1 1/8 | UCFS306-102D1 | 4 29/32 | 3 47/64 | 25/64 | 5/8 | 5/16 | 19/32 | 1 17/64 | 3.5433 | 1 47/64 | 1.6929 | 0.669 | 1/2 |
| 1 3/16 | UCFS306-103D1 | | | | | | | | | | | | |
| 35 | UCFS307D1 | 135 | 100 | 11 | 19 | 9 | 16 | 36 | 100 | 49 | 48 | 19 | M16 |
| 1 1/4 | UCFS307-104D1 | | | | | | | | | | | | |
| 1 5/16 | UCFS307-105D1 | 5 5/16 | 3 15/16 | 7/16 | 3/4 | 23/64 | 5/8 | 1 13/32 | 3.9370 | 1 59/64 | 1.8898 | 0.748 | 5/8 |
| 1 3/8 | UCFS307-106D1 | | | | | | | | | | | | |
| 1 7/16 | UCFS307-107D1 | | | | | | | | | | | | |
| 40 | UCFS308D1 | 150 | 112 | 13 | 19 | 10 | 17 | 40 | 115 | 56 | 52 | 19 | M16 |
| 1 1/2 | UCFS308-108D1 | 5 29/32 | 4 13/32 | 33/64 | 3/4 | 25/64 | 21/32 | 1 9/16 | 4.5276 | 2 13/64 | 2.0472 | 0.748 | 5/8 |
| 1 9/16 | UCFS308-109D1 | | | | | | | | | | | | |
| 45 | UCFS309D1 | 160 | 125 | 14 | 19 | 11 | 18 | 44 | 125 | 60 | 57 | 22 | M16 |
| 1 5/8 | UCFS309-110D1 | | | | | | | | | | | | |
| 1 11/16 | UCFS309-111D1 | 6 5/16 | 4 59/64 | 35/64 | 3/4 | 7/16 | 23/32 | 1 47/64 | 4.9213 | 2 23/64 | 2.2441 | 0.866 | 5/8 |
| 1 3/4 | UCFS309-112D1 | | | | | | | | | | | | |
| 50 | UCFS310D1 | 175 | 132 | 16 | 23 | 12 | 19 | 48 | 140 | 67 | 61 | 22 | M20 |
| 1 13/16 | UCFS310-113D1 | | | | | | | | | | | | |
| 1 7/8 | UCFS310-114D1 | 6 7/8 | 5 13/64 | 5/8 | 29/32 | 15/32 | 3/4 | 1 57/64 | 5.5118 | 2 41/64 | 2.4016 | 0.866 | 3/4 |
| 1 15/16 | UCFS310-115D1 | | | | | | | | | | | | |
| 55 | UCFS311D1 | 185 | 140 | 17 | 23 | 13 | 20 | 52 | 150 | 71 | 66 | 25 | M20 |
| 2 | UCFS311-200D1 | | | | | | | | | | | | |
| 2 1/16 | UCFS311-201D1 | 7 9/32 | 5 33/64 | 43/64 | 29/32 | 33/64 | 25/32 | 2 3/64 | 5.9055 | 2 51/64 | 2.5984 | 0.984 | 3/4 |
| 2 1/8 | UCFS311-202D1 | | | | | | | | | | | | |
| 2 3/16 | UCFS311-203D1 | | | | | | | | | | | | |

Remarks: 1) These numbers indicate relubricatable type. If maintenance free type is needed, please order without suffix "D1".
Note: Please refer to page 36 for size of grease fitting.

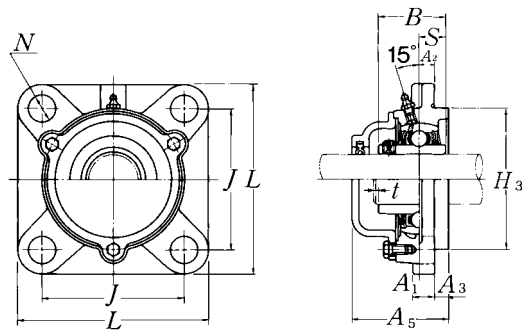


**Cast dust cover type**
Open end: **C-UCFS···D1**
Closed end: **CM-UCFS···D1**

| Bearing number | Housing [1] number | Unit number [1] cast dust cover type | Nominal dimensions | | Mass of unit | |
|---|---|---|---|---|---|---|
| | | | mm | inch | kg | lb |
| | | | $t$ max. | $A_5$ | UCFS | C(CM) |
| UC305D1 | FS305D1 | **C(CM)-UCFS305D1** | 2 | 56 | 1.2 | 1.4 |
| UC305-013D1 | FS305D1 | **C(CM)-UCFS305-013D1** | | | | |
| UC305-014D1 | FS305D1 | **C(CM)-UCFS305-014D1** | 5/64 | 2 13/64 | 2.7 | 3.1 |
| UC305-015D1 | FS305D1 | **C(CM)-UCFS305-015D1** | | | | |
| UC305-100D1 | FS305D1 | **C(CM)-UCFS305-100D1** | | | | |
| UC306D1 | FS306D1 | **C(CM)-UCFS306D1** | 2 | 60 | 1.8 | 2.2 |
| UC306-101D1 | FS306D1 | **C(CM)-UCFS306-101D1** | | | | |
| UC306-102D1 | FS306D1 | **C(CM)-UCFS306-102D1** | 5/64 | 2 23/64 | 4.0 | 4.9 |
| UC306-103D1 | FS306D1 | **C(CM)-UCFS306-103D1** | | | | |
| UC307D1 | FS307D1 | **C(CM)-UCFS307D1** | 3 | 67 | 2.3 | 2.8 |
| UC307-104D1 | FS307D1 | **C(CM)-UCFS307-104D1** | | | | |
| UC307-105D1 | FS307D1 | **C(CM)-UCFS307-105D1** | 1/8 | 2 41/64 | 5.1 | 6.2 |
| UC307-106D1 | FS307D1 | **C(CM)-UCFS307-106D1** | | | | |
| UC307-107D1 | FS307D1 | **C(CM)-UCFS307-107D1** | | | | |
| UC308D1 | FS308D1 | **C(CM)-UCFS308D1** | 3 | 76 | 3.1 | 3.6 |
| UC308-108D1 | FS308D1 | **C(CM)-UCFS308-108D1** | 1/8 | 2 63/64 | 6.8 | 7.9 |
| UC308-109D1 | FS308D1 | **C(CM)-UCFS308-109D1** | | | | |
| UC309D1 | FS309D1 | **C(CM)-UCFS309D1** | 3 | 80 | 3.8 | 4.7 |
| UC309-110D1 | FS309D1 | **C(CM)-UCFS309-110D1** | | | | |
| UC309-111D1 | FS309D1 | **C(CM)-UCFS309-111D1** | 1/8 | 3 5/32 | 8.4 | 10 |
| UC309-112D1 | FS309D1 | **C(CM)-UCFS309-112D1** | | | | |
| UC310D1 | FS310D1 | **C(CM)-UCFS310D1** | 3 | 88 | 5.0 | 6.2 |
| UC310-113D1 | FS310D1 | **C(CM)-UCFS310-113D1** | | | | |
| UC310-114D1 | FS310D1 | **C(CM)-UCFS310-114D1** | 1/8 | 3 15/32 | 11 | 14 |
| UC310-115D1 | FS310D1 | **C(CM)-UCFS310-115D1** | | | | |
| UC311D1 | FS311D1 | **C(CM)-UCFS311D1** | 4 | 93 | 5.9 | 7.2 |
| UC311-200D1 | FS311D1 | **C(CM)-UCFS311-200D1** | | | | |
| UC311-201D1 | FS311D1 | **C(CM)-UCFS311-201D1** | 5/32 | 3 21/32 | 13 | 16 |
| UC311-202D1 | FS311D1 | **C(CM)-UCFS311-202D1** | | | | |
| UC311-203D1 | FS311D1 | **C(CM)-UCFS311-203D1** | | | | |

## Square flanged units cast housing w/ spigot joint
## Set screw type

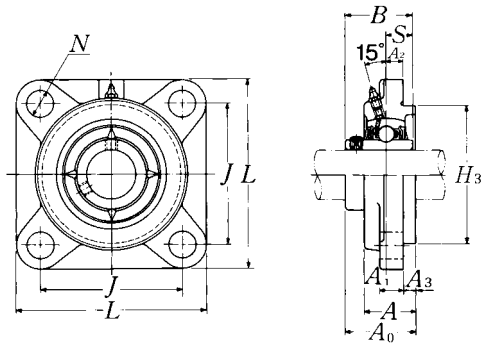


| Shaft dia. mm / inch | Unit number [1] | Nominal dimensions L | J | A2 | N | A3 | A1 (mm) | A (inch) | H3 | A0 | B | S | Bolt size mm / inch |
|---|---|---|---|---|---|---|---|---|---|---|---|---|---|
| 60 | UCFS312D1 | 195 | 150 | 19 | 23 | 14 | 22 | 56 | 160 | 78 | 71 | 26 | M20 |
| 2 1/4 | UCFS312-204D1 | | | | | | | | | | | | |
| 2 5/16 | UCFS312-205D1 | 7 11/16 | 5 29/32 | 3/4 | 29/32 | 35/64 | 7/8 | 2 13/64 | 6.2992 | 3 5/64 | 2.7953 | 1.024 | 3/4 |
| 2 3/8 | UCFS312-206D1 | | | | | | | | | | | | |
| 2 7/16 | UCFS312-207D1 | | | | | | | | | | | | |
| 65 | UCFS313D1 | 208 | 166 | 15 | 23 | 18 | 22 | 58 | 175 | 78 | 75 | 30 | M20 |
| 2 1/2 | UCFS313-208D1 | 8 3/16 | 6 17/32 | 19/32 | 29/32 | 45/64 | 7/8 | 2 9/32 | 6.8898 | 3 5/64 | 2.9528 | 1.181 | 3/4 |
| 2 9/16 | UCFS313-209D1 | | | | | | | | | | | | |
| 70 | UCFS314D1 | 226 | 178 | 18 | 25 | 18 | 25 | 61 | 185 | 81 | 78 | 33 | M22 |
| 2 5/8 | UCFS314-210D1 | | | | | | | | | | | | |
| 2 11/16 | UCFS314-211D1 | 8 29/32 | 7 1/64 | 45/64 | 63/64 | 45/64 | 31/32 | 2 13/32 | 7.2835 | 3 3/16 | 3.0709 | 1.299 | 7/8 |
| 2 3/4 | UCFS314-212D1 | | | | | | | | | | | | |
| 75 | UCFS315D1 | 236 | 184 | 21 | 25 | 18 | 25 | 66 | 200 | 89 | 82 | 32 | M22 |
| 2 13/16 | UCFS315-213D1 | | | | | | | | | | | | |
| 2 7/8 | UCFS315-214D1 | 9 9/32 | 7 1/4 | 53/64 | 63/64 | 45/64 | 31/32 | 2 19/32 | 7.8740 | 3 1/2 | 3.2283 | 1.260 | 7/8 |
| 2 15/16 | UCFS315-215D1 | | | | | | | | | | | | |
| 3 | UCFS315-300D1 | | | | | | | | | | | | |
| 80 | UCFS316D1 | 250 | 196 | 18 | 31 | 20 | 27 | 68 | 210 | 90 | 86 | 34 | M27 |
| 3 1/16 | UCFS316-301D1 | | | | | | | | | | | | |
| 3 1/8 | UCFS316-302D1 | 9 27/32 | 7 23/32 | 45/64 | 1 7/32 | 25/32 | 1 1/16 | 2 43/64 | 8.2677 | 3 35/64 | 3.3858 | 1.339 | 1 |
| 3 3/16 | UCFS316-303D1 | | | | | | | | | | | | |
| 85 | UCFS317D1 | 260 | 204 | 24 | 31 | 20 | 27 | 74 | 220 | 100 | 96 | 40 | M27 |
| 3 1/4 | UCFS317-304D1 | | | | | | | | | | | | |
| 3 5/16 | UCFS317-305D1 | 10 1/4 | 8 1/32 | 15/16 | 1 7/32 | 25/32 | 1 1/16 | 2 29/32 | 8.6614 | 3 15/16 | 3.7795 | 1.575 | 1 |
| 3 7/16 | UCFS317-307D1 | | | | | | | | | | | | |
| 90 | UCFS318D1 | 280 | 216 | 24 | 35 | 20 | 30 | 76 | 240 | 100 | 96 | 40 | M30 |
| 3 7/16 | UCFS318-307D1 | 11 1/32 | 8 1/2 | 15/16 | 1 3/8 | 25/32 | 1 3/16 | 2 63/64 | 9.4488 | 3 15/16 | 3.7795 | 1.575 | 1 1/8 |
| 3 1/2 | UCFS318-308D1 | | | | | | | | | | | | |

Remarks: 1) These numbers indicate relubricatable type. If maintenance free type is needed, please order without suffix "D1".
Note: Please refer to page 36 for size of grease fitting.

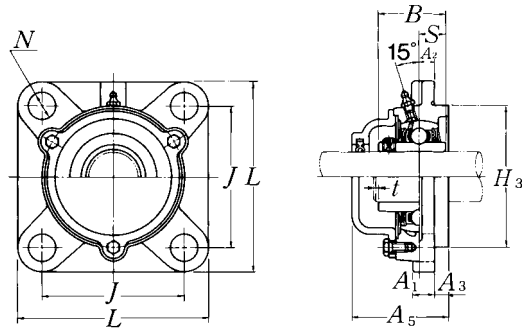


**Cast dust cover type**
Open end: **C-UCFS···D1**
Closed end: **CM-UCFS···D1**

| Bearing number | Housing [1] number | Unit number [1] cast dust cover type | Nominal dimensions | | Mass of unit | |
|---|---|---|---|---|---|---|
| | | | mm | inch | kg | lb |
| | | | $t$ max. | $A_5$ | UCFS | C(CM) |
| UC312D1 | FS312D1 | C(CM)-UCFS312D1 | 4 | 100 | 7.0 | 8.4 |
| UC312-204D1 | FS312D1 | C(CM)-UCFS312-204D1 | | | | |
| UC312-205D1 | FS312D1 | C(CM)-UCFS312-205D1 | 5/32 | 3 15/16 | 15 | 19 |
| UC312-206D1 | FS312D1 | C(CM)-UCFS312-206D1 | | | | |
| UC312-207D1 | FS312D1 | C(CM)-UCFS312-207D1 | | | | |
| UC313D1 | FS313D1 | C(CM)-UCFS313D1 | 4 | 103 | 8.6 | 10 |
| UC313-208D1 | FS313D1 | C(CM)-UCFS313-208D1 | 5/32 | 4 1/16 | 19 | 22 |
| UC313-209D1 | FS313D1 | C(CM)-UCFS313-209D1 | | | | |
| UC314D1 | FS314D1 | C(CM)-UCFS314D1 | 4 | 106 | 10 | 12 |
| UC314-210D1 | FS314D1 | C(CM)-UCFS314-210D1 | | | | |
| UC314-211D1 | FS314D1 | C(CM)-UCFS314-211D1 | 5/32 | 4 11/64 | 22 | 26 |
| UC314-212D1 | FS314D1 | C(CM)-UCFS314-212D1 | | | | |
| UC315D1 | FS315D1 | C(CM)-UCFS315D1 | 4 | 114 | 12 | 14 |
| UC315-213D1 | FS315D1 | C(CM)-UCFS315-213D1 | | | | |
| UC315-214D1 | FS315D1 | C(CM)-UCFS315-214D1 | 5/32 | 4 31/64 | 26 | 31 |
| UC315-215D1 | FS315D1 | C(CM)-UCFS315-215D1 | | | | |
| UC315-300D1 | FS315D1 | C(CM)-UCFS315-300D1 | | | | |
| UC316D1 | FS316D1 | C(CM)-UCFS316D1 | 4 | 116 | 14 | 17 |
| UC316-301D1 | FS316D1 | C(CM)-UCFS316-301D1 | | | | |
| UC316-302D1 | FS316D1 | C(CM)-UCFS316-302D1 | 5/32 | 4 9/16 | 31 | 37 |
| UC316-303D1 | FS316D1 | C(CM)-UCFS316-303D1 | | | | |
| UC317D1 | FS317D1 | C(CM)-UCFS317D1 | 5 | 129 | 17 | 20 |
| UC317-304D1 | FS317D1 | C(CM)-UCFS317-304D1 | | | | |
| UC317-305D1 | FS317D1 | C(CM)-UCFS317-305D1 | 13/64 | 5 5/64 | 37 | 44 |
| UC317-307D1 | FS317D1 | C(CM)-UCFS317-307D1 | | | | |
| UC318D1 | FS318D1 | C(CM)-UCFS318D1 | 5 | 129 | 20 | 24 |
| UC318-307D1 | FS318D1 | C(CM)-UCFS318-307D1 | 13/64 | 5 5/64 | 44 | 53 |
| UC318-308D1 | FS318D1 | C(CM)-UCFS318-308D1 | | | | |

## Square flanged units cast housing w/ spigot joint
## Set screw type

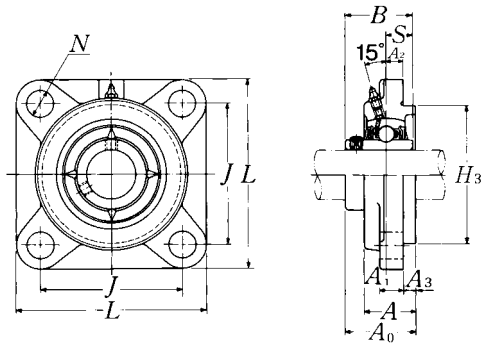


| Shaft dia. mm / inch | Unit number [1] | Nominal dimensions | | | | | | | | | | | Bolt size mm / inch |
|---|---|---|---|---|---|---|---|---|---|---|---|---|---|
| | | | | | | | mm | inch | | | | | |
| | | $L$ | $J$ | $A_2$ | $N$ | $A_3$ | $A_1$ | $A$ | $H_3$ | $A_0$ | $B$ | $S$ | |
| **95** | **UCFS319D1** | 290 | 228 | 39 | 35 | 20 | 30 | 94 | 250 | 121 | 103 | 41 | M30 |
| **3 5/8** | **UCFS319-310D1** | | | | | | | | | | | | |
| **3 11/16** | **UCFS319-311D1** | 11 13/32 | 8 31/32 | 1 17/32 | 1 3/8 | 25/32 | 1 3/16 | 3 45/64 | 9.8425 | 4 49/64 | 4.0551 | 1.614 | 1 1/8 |
| **3 3/4** | **UCFS319-312D1** | | | | | | | | | | | | |
| **100** | **UCFS320D1** | 310 | 242 | 39 | 38 | 20 | 32 | 94 | 260 | 125 | 108 | 42 | M33 |
| **3 13/16** | **UCFS320-313D1** | | | | | | | | | | | | |
| **3 7/8** | **UCFS320-314D1** | 12 7/32 | 9 17/32 | 1 17/32 | 1 1/2 | 25/32 | 1 1/4 | 3 45/64 | 10.2362 | 4 59/64 | 4.2520 | 1.654 | 1 1/4 |
| **3 15/16** | **UCFS320-315D1** | | | | | | | | | | | | |
| **4** | **UCFS320-400D1** | | | | | | | | | | | | |
| **105** | **UCFS321D1** | 310 | 242 | 39 | 38 | 20 | 32 | 94 | 260 | 127 | 112 | 44 | M33 |
| **110** | **UCFS322D1** | 340 | 266 | 35 | 41 | 25 | 35 | 96 | 300 | 131 | 117 | 46 | M36 |
| **120** | **UCFS324D1** | 370 | 290 | 35 | 41 | 30 | 40 | 110 | 330 | 140 | 126 | 51 | M36 |
| **130** | **UCFS326D1** | 410 | 320 | 35 | 41 | 30 | 45 | 115 | 360 | 146 | 135 | 54 | M36 |
| **140** | **UCFS328D1** | 450 | 350 | 45 | 41 | 30 | 55 | 125 | 400 | 161 | 145 | 59 | M36 |

Remarks: 1) These numbers indicate relubricatable type. If maintenance free type is needed, please order without suffix "D1".
Note: Please refer to page 36 for size of grease fitting.

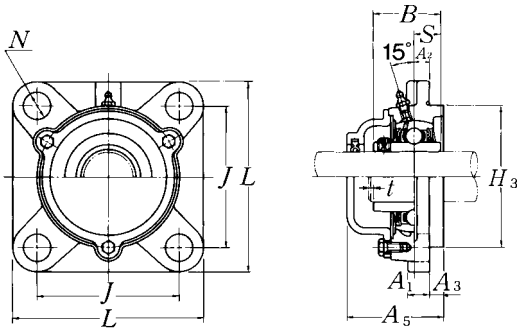


**Cast dust cover type**
Open end: **C-UCFS···D1**
Closed end: **CM-UCFS···D1**

| Bearing number | Housing [1] number | Unit number [1] cast dust cover type | Nominal dimensions | | Mass of unit | |
|---|---|---|---|---|---|---|
| | | | mm | inch | kg | lb |
| | | | $t$ max. | $A_5$ | UCFS | C(CM) |
| UC319D1 | FS319D1 | **C(CM)-UCFS319D1** | 5 | 149 | 24 | 28 |
| UC319-310D1 | FS319D1 | **C(CM)-UCFS319-310D1** | 13/64 | 5 55/64 | 53 | 62 |
| UC319-311D1 | FS319D1 | **C(CM)-UCFS319-311D1** | | | | |
| UC319-312D1 | FS319D1 | **C(CM)-UCFS319-312D1** | | | | |
| UC320D1 | FS320D1 | **C(CM)-UCFS320D1** | 5 | 154 | 29 | 34 |
| UC320-313D1 | FS320D1 | **C(CM)-UCFS320-313D1** | 13/64 | 6 1/16 | 64 | 75 |
| UC320-314D1 | FS320D1 | **C(CM)-UCFS320-314D1** | | | | |
| UC320-315D1 | FS320D1 | **C(CM)-UCFS320-315D1** | | | | |
| UC320-400D1 | FS320D1 | **C(CM)-UCFS320-400D1** | | | | |
| UC321D1 | FS321D1 | **C(CM)-UCFS321D1** | 5 | 156 | 28 | 33 |
| UC322D1 | FS322D1 | **C(CM)-UCFS322D1** | 5 | 160 | 38 | 45 |
| UC324D1 | FS324D1 | **C(CM)-UCFS324D1** | 5 | 172 | 52 | 59 |
| UC326D1 | FS326D1 | **C(CM)-UCFS326D1** | 6 | 178 | 69 | 77 |
| UC328D1 | FS328D1 | **C(CM)-UCFS328D1** | 6 | 192 | 98 | 109 |

## Square flanged units w/ spigot joint (Steel series)
## Set screw type

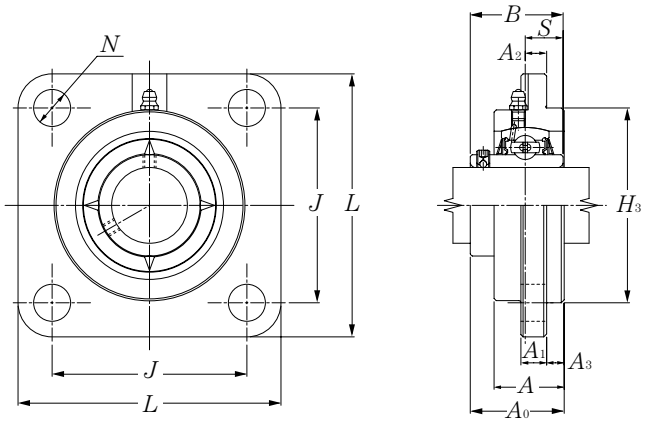


| Shaft dia. mm | Unit number 1) | Nominal dimensions mm | | | | | | | | | | | Bolt size mm | Bearing number |
|---|---|---|---|---|---|---|---|---|---|---|---|---|---|---|
| | | $L$ | $J$ | $A_2$ | $N$ | $A_3$ | $A_1$ | $A$ | $H_3$ | $A_0$ | $B$ | $S$ | | |
| **25** | **UCFSG305D1** | 110 | 80 | 9 | 16 | 7 | 13 | 29 | 80 | 39 | 38 | 15 | M14 | UC305D1 |
| **30** | **UCFSG306D1** | 125 | 95 | 10 | 16 | 8 | 15 | 32 | 90 | 44 | 43 | 17 | M14 | UC306D1 |
| **35** | **UCFSG307D1** | 135 | 100 | 11 | 19 | 9 | 16 | 36 | 100 | 49 | 48 | 19 | M16 | UC307D1 |
| **40** | **UCFSG308D1** | 150 | 112 | 13 | 19 | 10 | 17 | 40 | 115 | 56 | 52 | 19 | M16 | UC308D1 |
| **45** | **UCFSG309D1** | 160 | 125 | 14 | 19 | 11 | 18 | 44 | 125 | 60 | 57 | 22 | M16 | UC309D1 |
| **50** | **UCFSG310D1** | 175 | 132 | 16 | 23 | 12 | 19 | 48 | 140 | 67 | 61 | 22 | M20 | UC310D1 |
| **55** | **UCFSG311D1** | 185 | 140 | 17 | 23 | 13 | 20 | 52 | 150 | 71 | 66 | 25 | M20 | UC311D1 |
| **60** | **UCFSG312D1** | 195 | 150 | 19 | 23 | 14 | 22 | 56 | 160 | 78 | 71 | 26 | M20 | UC312D1 |
| **65** | **UCFSG313D1** | 208 | 166 | 15 | 23 | 18 | 22 | 58 | 175 | 78 | 75 | 30 | M20 | UC313D1 |
| **70** | **UCFSG314D1** | 226 | 178 | 18 | 25 | 18 | 25 | 61 | 185 | 81 | 78 | 33 | M22 | UC314D1 |
| **75** | **UCFSG315D1** | 236 | 184 | 21 | 25 | 18 | 25 | 66 | 200 | 89 | 82 | 32 | M22 | UC315D1 |
| **80** | **UCFSG316D1** | 250 | 196 | 18 | 31 | 20 | 27 | 68 | 210 | 90 | 86 | 34 | M27 | UC316D1 |
| **85** | **UCFSG317D1** | 260 | 204 | 24 | 31 | 20 | 27 | 74 | 220 | 100 | 96 | 40 | M27 | UC317D1 |
| **90** | **UCFSG318D1** | 280 | 216 | 24 | 35 | 20 | 30 | 76 | 240 | 100 | 96 | 40 | M30 | UC318D1 |
| **95** | **UCFSG319D1** | 290 | 228 | 39 | 35 | 20 | 30 | 94 | 250 | 121 | 103 | 41 | M30 | UC319D1 |
| **100** | **UCFSG320D1** | 310 | 242 | 39 | 38 | 20 | 32 | 94 | 260 | 125 | 108 | 42 | M33 | UC320D1 |
| **105** | **UCFSG321D1** | 310 | 242 | 39 | 38 | 20 | 32 | 94 | 260 | 127 | 112 | 44 | M33 | UC321D1 |
| **110** | **UCFSG322D1** | 340 | 266 | 35 | 41 | 25 | 35 | 96 | 300 | 131 | 117 | 46 | M36 | UC322D1 |
| **120** | **UCFSG324D1** | 370 | 290 | 35 | 41 | 30 | 40 | 110 | 330 | 140 | 126 | 51 | M36 | UC324D1 |
| **130** | **UCFSG326D1** | 410 | 320 | 35 | 41 | 30 | 45 | 115 | 360 | 146 | 135 | 54 | M36 | UC326D1 |
| **140** | **UCFSG328D1** | 450 | 350 | 45 | 41 | 30 | 55 | 125 | 400 | 161 | 145 | 59 | M36 | UC328D1 |

Remarks: 1) These numbers indicate relubricatable type. If maintenance free type is needed, please order without suffix "D1".
Note: Please refer to page 36 for size of grease fitting.

| Housing [1)] number | Mass of unit kg |
|---|---|
| FSG305D1 | 1.9 |
| FSG306D1 | 2.1 |
| FSG307D1 | 2.6 |
| FSG308D1 | 3.6 |
| FSG309D1 | 4.5 |
| FSG310D1 | 5.8 |
| FSG311D1 | 6.9 |
| FSG312D1 | 8.3 |
| FSG313D1 | 10 |
| FSG314D1 | 13 |
| FSG315D1 | 15 |
| FSG316D1 | 17 |
| FSG317D1 | 20 |
| FSG318D1 | 24 |
| FSG319D1 | 29 |
| FSG320D1 | 35 |
| FSG321D1 | 33 |
| FSG322D1 | 45 |
| FSG324D1 | 61 |
| FSG326D1 | 80 |
| FSG328D1 | 113 |

## Round flanged units cast housing w/ spigot joint
## Set screw type

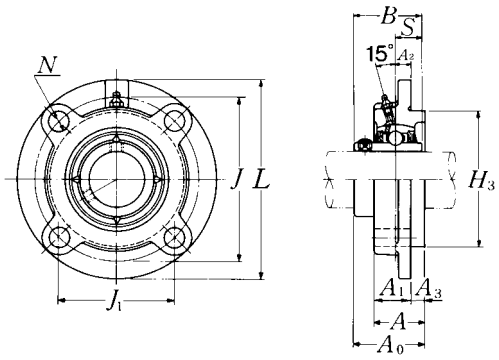


| Shaft dia. mm / inch | Unit number [1] | Nominal dimensions L | J | (J1) | A2 | N | A3 (mm / inch) | A1 | A1C | A | H3 | A0 | B | S | Bolt size mm / inch |
|---|---|---|---|---|---|---|---|---|---|---|---|---|---|---|---|
| 12 | UCFC201D1 | 100 | 78 | 55.2 | 10 | 12 | 5 | 20.5 | 20.5 | 25.5 | 62 | 33.3 | 31 | 12.7 | M10 |
| 1/2 | UCFC201-008D1 | 3 15/16 | 3 5/64 | 2 11/64 | 25/64 | 15/32 | 13/64 | 13/16 | 13/16 | 1 | 2.4409 | 1 15/16 | 1.2205 | 0.500 | 3/8 |
| 15 | UCFC202D1 | 100 | 78 | 55.2 | 10 | 12 | 5 | 20.5 | 20.5 | 25.5 | 62 | 33.3 | 31 | 12.7 | M10 |
| 9/16 | UCFC202-009D1 | 3 15/16 | 3 5/64 | 2 11/64 | 25/64 | 15/32 | 13/64 | 13/16 | 13/16 | 1 | 2.4409 | 1 5/16 | 1.2205 | 0.500 | 3/8 |
| 5/8 | UCFC202-010D1 | | | | | | | | | | | | | | |
| 17 | UCFC203D1 | 100 | 78 | 55.2 | 10 | 12 | 5 | 20.5 | 20.5 | 25.5 | 62 | 33.3 | 31 | 12.7 | M10 |
| 11/16 | UCFC203-011D1 | 3 15/16 | 3 5/64 | 2 11/64 | 25/64 | 15/32 | 13/64 | 13/16 | 13/16 | 1 | 2.4409 | 1 5/16 | 1.2205 | 0.500 | 3/8 |
| 20 | UCFC204D1 | 100 | 78 | 55.2 | 10 | 12 | 5 | 20.5 | 20.5 | 25.5 | 62 | 33.3 | 31 | 12.7 | M10 |
| 3/4 | UCFC204-012D1 | 3 15/16 | 3 5/64 | 2 11/64 | 25/64 | 15/32 | 13/64 | 13/16 | 13/16 | 1 | 2.4409 | 1 5/16 | 1.2205 | 0.500 | 3/8 |
| 25 | UCFC205D1 | 115 | 90 | 63.6 | 10 | 12 | 6 | 21 | 22 | 27 | 70 | 35.8 | 34.1 | 14.3 | M10 |
| 13/16 | UCFC205-013D1 | | | | | | | | | | | | | | |
| 7/8 | UCFC205-014D1 | 4 17/32 | 3 35/64 | 2 1/2 | 25/64 | 15/32 | 15/64 | 13/16 | 7/8 | 1 1/16 | 2.7559 | 1 13/32 | 1.3425 | 0.563 | 3/8 |
| 15/16 | UCFC205-015D1 | | | | | | | | | | | | | | |
| 1 | UCFC205-100D1 | | | | | | | | | | | | | | |
| 30 | UCFC206D1 | 125 | 100 | 70.7 | 10 | 12 | 8 | 23 | 24.5 | 31 | 80 | 40.2 | 38.1 | 15.9 | M10 |
| 1 1/16 | UCFC206-101D1 | | | | | | | | | | | | | | |
| 1 1/8 | UCFC206-102D1 | 4 29/32 | 3 15/16 | 2 25/32 | 25/64 | 15/32 | 5/16 | 29/32 | 31/32 | 1 7/32 | 3.1496 | 1 37/64 | 1.5000 | 0.629 | 3/8 |
| 1 3/16 | UCFC206-103D1 | | | | | | | | | | | | | | |
| 1 1/4 | UCFC206-104D1 | | | | | | | | | | | | | | |
| 35 | UCFC207D1 | 135 | 110 | 77.8 | 11 | 14 | 8 | 26 | 26 | 34 | 90 | 44.4 | 42.9 | 17.5 | M12 |
| 1 1/4 | UCFC207-104D1 | | | | | | | | | | | | | | |
| 1 5/16 | UCFC207-105D1 | 5 5/16 | 4 21/64 | 3 1/16 | 7/16 | 35/64 | 5/16 | 1 1/32 | 1 1/32 | 1 11/32 | 3.5433 | 1 3/4 | 1.6890 | 0.689 | 7/16 |
| 1 3/8 | UCFC207-106D1 | | | | | | | | | | | | | | |
| 1 7/16 | UCFC207-107D1 | | | | | | | | | | | | | | |
| 40 | UCFC208D1 | 145 | 120 | 84.9 | 11 | 14 | 10 | 26 | 27.5 | 36 | 100 | 51.2 | 49.2 | 19 | M12 |
| 1 1/2 | UCFC208-108D1 | 5 23/32 | 4 23/32 | 3 11/32 | 7/16 | 35/64 | 25/64 | 1 1/32 | 1 5/64 | 1 27/64 | 3.9370 | 2 1/64 | 1.9370 | 0.748 | 7/16 |
| 1 9/16 | UCFC208-109D1 | | | | | | | | | | | | | | |
| 45 | UCFC209D1 | 160 | 132 | 93.3 | 10 | 16 | 12 | 26 | 28 | 38 | 105 | 52.2 | 49.2 | 19 | M14 |
| 1 5/8 | UCFC209-110D1 | | | | | | | | | | | | | | |
| 1 11/16 | UCFC209-111D1 | 6 5/16 | 5 13/64 | 3 43/64 | 25/64 | 5/8 | 15/32 | 1 1/32 | 1 7/64 | 1 1/2 | 4.1339 | 2 3/64 | 1.9370 | 0.748 | 1/2 |
| 1 3/4 | UCFC209-112D1 | | | | | | | | | | | | | | |

Remarks: 1) These numbers indicate relubricatable type. If maintenance free type is needed, please order without suffix "D1".
Note: Please refer to page 36 for size of grease fitting.

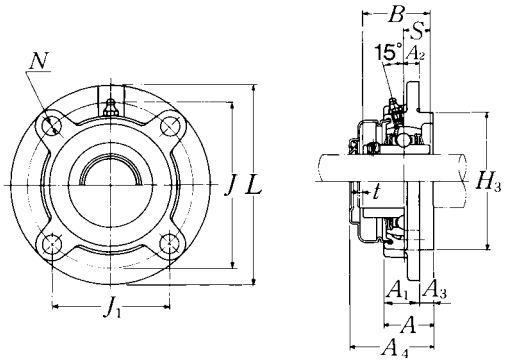


**Pressed steel dust cover type**
Open end: **S-UCFC···D1**
Closed end: **SM-UCFC···D1**

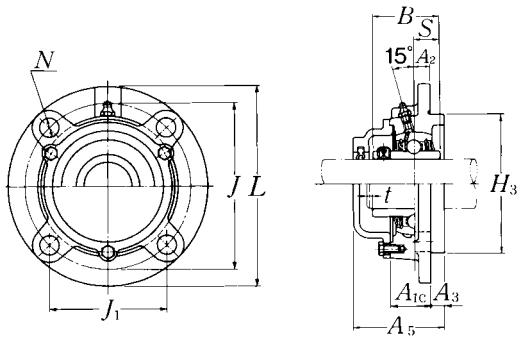


**Cast dust cover type**
Open end: **C-UCFC···D1**
Closed end: **CM-UCFC···D1**

| Bearing number | Housing number [1] | Unit number pressed steel dust cover type [1] | Unit number cast dust cover type [1] | Nominal dimensions mm | | inch | Mass of unit kg | | lb |
|---|---|---|---|---|---|---|---|---|---|
| | | | | $t$ max. | $A_4$ | $A_5$ | UCFC | S(SM) | C(CM) |
| UC201D1 | FC204D1 | S(SM)-UCFC201D1 | C(CM)-UCFC201D1 | 2 | 40.5 | 46 | 0.8 | 0.8 | 0.9 |
| UC201-008D1 | FC204D1 | S(SM)-UCFC201-008D1 | S(SM)-UCFC201-008D1 | 5/64 | 1 19/32 | 1 13/16 | 1.8 | 1.8 | 2.0 |
| UC202D1 | FC204D1 | S(SM)-UCFC202D1 | C(CM)-UCFC202D1 | 2 | 40.5 | 46 | 0.8 | 0.8 | 0.9 |
| UC202-009D1 | FC204D1 | S(SM)-UCFC202-009D1 | C(CM)-UCFC202-009D1 | 5/64 | 1 19/32 | 1 13/16 | 1.8 | 1.8 | 2.0 |
| UC202-010D1 | FC204D1 | S(SM)-UCFC202-010D1 | C(CM)-UCFC202-010D1 | | | | | | |
| UC203D1 | FC204D1 | S(SM)-UCFC203D1 | C(CM)-UCFC203D1 | 2 | 40.5 | 46 | 0.8 | 0.8 | 0.9 |
| UC203-011D1 | FC204D1 | S(SM)-UCFC203-011D1 | C(CM)-UCFC203-011D1 | 5/64 | 1 19/32 | 1 13/16 | 1.8 | 1.8 | 2.0 |
| UC204D1 | FC204D1 | S(SM)-UCFC204D1 | C(CM)-UCFC204D1 | 2 | 40.5 | 46 | 0.7 | 0.7 | 0.9 |
| UC204-012D1 | FC204D1 | S(SM)-UCFC204-012D1 | C(CM)-UCFC204-012D1 | 5/64 | 1 19/32 | 1 13/16 | 1.5 | 1.5 | 2.0 |
| UC205D1 | FC205D1 | S(SM)-UCFC205D1 | C(CM)-UCFC205D1 | 2 | 44.5 | 51 | 1.0 | 1.0 | 1.2 |
| UC205-013D1 | FC205D1 | S(SM)-UCFC205-013D1 | C(CM)-UCFC205-013D1 | | | | | | |
| UC205-014D1 | FC205D1 | S(SM)-UCFC205-014D1 | C(CM)-UCFC205-014D1 | 5/64 | 1 3/4 | 2 | 2.2 | 2.2 | 2.7 |
| UC205-015D1 | FC205D1 | S(SM)-UCFC205-015D1 | C(CM)-UCFC205-015D1 | | | | | | |
| UC205-100D1 | FC205D1 | S(SM)-UCFC205-100D1 | C(CM)-UCFC205-100D1 | | | | | | |
| UC206D1 | FC206D1 | S(SM)-UCFC206D1 | C(CM)-UCFC206D1 | 2 | 49 | 56 | 1.3 | 1.4 | 1.6 |
| UC206-101D1 | FC206D1 | S(SM)-UCFC206-101D1 | C(CM)-UCFC206-101D1 | | | | | | |
| UC206-102D1 | FC206D1 | S(SM)-UCFC206-102D1 | C(CM)-UCFC206-102D1 | 5/64 | 1 59/64 | 2 13/64 | 2.9 | 3.1 | 3.5 |
| UC206-103D1 | FC206D1 | S(SM)-UCFC206-103D1 | C(CM)-UCFC206-103D1 | | | | | | |
| UC206-104D1 | FC206D1 | S(SM)-UCFC206-104D1 | C(CM)-UCFC206-104D1 | | | | | | |
| UC207D1 | FC207D1 | S(SM)-UCFC207D1 | C(CM)-UCFC207D1 | 3 | 55 | 59 | 1.6 | 1.7 | 1.9 |
| UC207-104D1 | FC207D1 | S(SM)-UCFC207-104D1 | C(CM)-UCFC207-104D1 | | | | | | |
| UC207-105D1 | FC207D1 | S(SM)-UCFC207-105D1 | C(CM)-UCFC207-105D1 | 1/8 | 2 11/64 | 2 21/64 | 3.5 | 3.7 | 4.2 |
| UC207-106D1 | FC207D1 | S(SM)-UCFC207-106D1 | C(CM)-UCFC207-106D1 | | | | | | |
| UC207-107D1 | FC207D1 | S(SM)-UCFC207-107D1 | C(CM)-UCFC207-107D1 | | | | | | |
| UC208D1 | FC208D1 | S(SM)-UCFC208D1 | C(CM)-UCFC208D1 | 3 | 62 | 66 | 2.0 | 2.1 | 2.4 |
| UC208-108D1 | FC208D1 | S(SM)-UCFC208-108D1 | C(CM)-UCFC208-108D1 | 1/8 | 2 7/16 | 2 19/32 | 4.4 | 4.6 | 5.3 |
| UC208-109D1 | FC208D1 | S(SM)-UCFC208-109D1 | C(CM)-UCFC208-109D1 | | | | | | |
| UC209D1 | FC209D1 | S(SM)-UCFC209D1 | C(CM)-UCFC209D1 | 3 | 63 | 70 | 2.7 | 2.7 | 3.2 |
| UC209-110D1 | FC209D1 | S(SM)-UCFC209-110D1 | C(CM)-UCFC209-110D1 | | | | | | |
| UC209-111D1 | FC209D1 | S(SM)-UCFC209-111D1 | C(CM)-UCFC209-111D1 | 1/8 | 2 31/64 | 2 3/4 | 6.0 | 6.0 | 7.1 |
| UC209-112D1 | FC209D1 | S(SM)-UCFC209-112D1 | C(CM)-UCFC209-112D1 | | | | | | |

## Round flanged units cast housing w/ spigot joint
## Set screw type

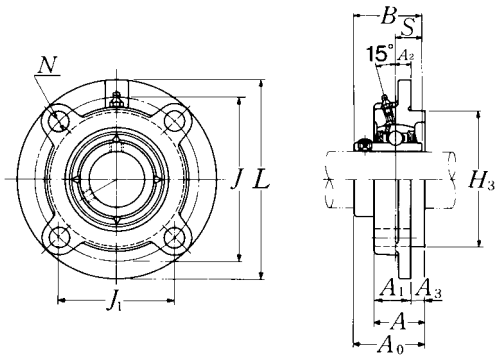


| Shaft dia. mm / inch | Unit number [1] | Nominal dimensions | | | | | | | | | | | | | Bolt size mm / inch |
|---|---|---|---|---|---|---|---|---|---|---|---|---|---|---|---|
| | | | | | | | mm | | inch | | | | | | |
| | | $L$ | $J$ | $(J_1)$ | $A_2$ | $N$ | $A_3$ | $A_1$ | $A_{1C}$ | $A$ | $H_3$ | $A_0$ | $B$ | $S$ | |
| **50** | **UCFC210D1** | 165 | 138 | 97.6 | 10 | 16 | 12 | 28 | 29 | 40 | 110 | 54.6 | 51.6 | 19 | M14 |
| **1 13/16** | **UCFC210-113D1** | | | | | | | | | | | | | | |
| **1 7/8** | **UCFC210-114D1** | 6 1/2 | 5 7/16 | 3 27/32 | 25/64 | 5/8 | 15/32 | 1 3/32 | 1 5/32 | 1 37/64 | 4.3307 | 2 5/32 | 2.0315 | 0.748 | 1/2 |
| **1 15/16** | **UCFC210-115D1** | | | | | | | | | | | | | | |
| **2** | **UCFC210-200D1** | | | | | | | | | | | | | | |
| **55** | **UCFC211D1** | 185 | 150 | 106.1 | 13 | 19 | 12 | 31 | 32.5 | 43 | 125 | 58.4 | 55.6 | 22.2 | M16 |
| **2** | **UCFC211-200D1** | | | | | | | | | | | | | | |
| **2 1/16** | **UCFC211-201D1** | 7 9/32 | 5 29/32 | 4 11/64 | 33/64 | 3/4 | 15/32 | 1 7/32 | 1 9/32 | 1 11/16 | 4.9213 | 2 19/64 | 2.1890 | 0.874 | 5/8 |
| **2 1/8** | **UCFC211-202D1** | | | | | | | | | | | | | | |
| **2 3/16** | **UCFC211-203D1** | | | | | | | | | | | | | | |
| **60** | **UCFC212D1** | 195 | 160 | 113.1 | 17 | 19 | 12 | 36 | 38 | 48 | 135 | 68.7 | 65.1 | 25.4 | M16 |
| **2 1/4** | **UCFC212-204D1** | | | | | | | | | | | | | | |
| **2 5/16** | **UCFC212-205D1** | 7 11/16 | 6 19/64 | 4 29/64 | 43/64 | 3/4 | 15/32 | 1 13/32 | 1 1/2 | 1 57/64 | 5.3150 | 2 45/64 | 2.5630 | 1.000 | 5/8 |
| **2 3/8** | **UCFC212-206D1** | | | | | | | | | | | | | | |
| **2 7/16** | **UCFC212-207D1** | | | | | | | | | | | | | | |
| **65** | **UCFC213D1** | 205 | 170 | 120.2 | 16 | 19 | 14 | 36 | 38 | 50 | 145 | 69.7 | 65.1 | 25.4 | M16 |
| **2 1/2** | **UCFC213-208D1** | 8 1/16 | 6 11/16 | 4 47/64 | 5/8 | 3/4 | 35/64 | 1 13/32 | 1 1/2 | 1 31/32 | 5.7087 | 2 3/4 | 2.5630 | 1.000 | 5/8 |
| **2 9/16** | **UCFC213-209D1** | | | | | | | | | | | | | | |
| **70** | **UCFC214D1** | 215 | 177 | 125.2 | 17 | 19 | 14 | 40 | 39.5 | 54 | 150 | 75.4 | 74.6 | 30.2 | M16 |
| **2 5/8** | **UCFC214-210D1** | | | | | | | | | | | | | | |
| **2 11/16** | **UCFC214-211D1** | 8 15/32 | 6 31/32 | 4 59/64 | 43/64 | 3/4 | 35/64 | 1 37/64 | 1 9/16 | 2 1/8 | 5.9055 | 2 31/32 | 2.9370 | 1.189 | 5/8 |
| **2 3/4** | **UCFC214-212D1** | | | | | | | | | | | | | | |
| **75** | **UCFC215D1** | 220 | 184 | 130.1 | 18 | 19 | 16 | 40 | 43 | 56 | 160 | 78.5 | 77.8 | 33.3 | M16 |
| **2 13/16** | **UCFC215-213D1** | | | | | | | | | | | | | | |
| **2 7/8** | **UCFC215-214D1** | 8 21/32 | 7 1/4 | 5 1/8 | 45/64 | 3/4 | 5/8 | 1 37/64 | 1 11/16 | 2 13/64 | 6.2992 | 3 3/32 | 3.0630 | 1.311 | 5/8 |
| **2 15/16** | **UCFC215-215D1** | | | | | | | | | | | | | | |
| **3** | **UCFC215-300D1** | | | | | | | | | | | | | | |
| **80** | **UCFC216D1** | 240 | 200 | 141.4 | 18 | 23 | 16 | 42 | 43 | 58 | 170 | 83.3 | 82.6 | 33.3 | M20 |
| **3 1/16** | **UCFC216-301D1** | | | | | | | | | | | | | | |
| **3 1/8** | **UCFC216-302D1** | 9 7/16 | 7 7/8 | 5 9/16 | 45/64 | 29/32 | 5/8 | 1 21/32 | 1 11/16 | 2 9/32 | 6.6929 | 2 9/32 | 3.2520 | 1.311 | 3/4 |
| **3 3/16** | **UCFC216-303D1** | | | | | | | | | | | | | | |

Remarks: 1) These numbers indicate relubricatable type. If maintenance free type is needed, please order without suffix "D1".
Note: Please refer to page 36 for size of grease fitting.

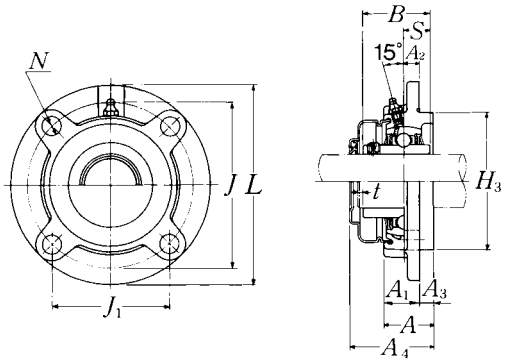


**Pressed steel dust cover type**
Open end: **S-UCFC···D1**
Closed end: **SM-UCFC···D1**

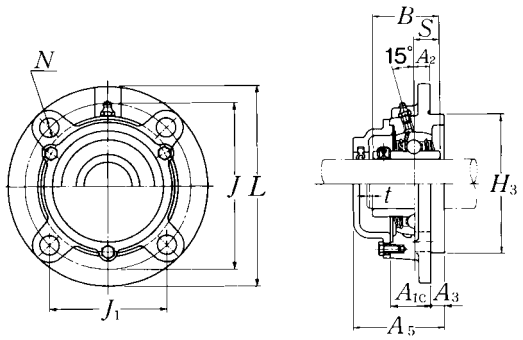


**Cast dust cover type**
Open end: **C-UCFC···D1**
Closed end: **CM-UCFC···D1**

| Bearing number | Housing number [1] | Unit number pressed steel dust cover type [1] | Unit number cast dust cover type [1] | Nominal dimensions mm | | inch | Mass of unit kg | | lb |
|---|---|---|---|---|---|---|---|---|---|
| | | | | $t$ max. | $A_4$ | $A_5$ | UCFC | S(SM) | C(CM) |
| UC210D1 | FC210D1 | S(SM)-UCFC210D1 | C(CM)-UCFC210D1 | 3 | 65.5 | 72 | 3.0 | 3.1 | 3.6 |
| UC210-113D1 | FC210D1 | S(SM)-UCFC210-113D1 | C(CM)-UCFC210-113D1 | | | | | | |
| UC210-114D1 | FC210D1 | S(SM)-UCFC210-114D1 | C(CM)-UCFC210-114D1 | 1/8 | 2 37/64 | 2 53/64 | 6.6 | 6.8 | 7.9 |
| UC210-115D1 | FC210D1 | S(SM)-UCFC210-115D1 | C(CM)-UCFC210-115D1 | | | | | | |
| UC210-200D1 | FC210D1 | S(SM)-UCFC210-200D1 | C(CM)-UCFC210-200D1 | | | | | | |
| UC211D1 | FC211D1 | S(SM)-UCFC211D1 | C(CM)-UCFC211D1 | 4 | 71 | 75 | 4.1 | 4.2 | 4.8 |
| UC211-200D1 | FC211D1 | S(SM)-UCFC211-200D1 | C(CM)-UCFC211-200D1 | | | | | | |
| UC211-201D1 | FC211D1 | S(SM)-UCFC211-201D1 | C(CM)-UCFC211-201D1 | 5/32 | 2 51/64 | 2 61/64 | 9.0 | 9.3 | 11 |
| UC211-202D1 | FC211D1 | S(SM)-UCFC211-202D1 | C(CM)-UCFC211-202D1 | | | | | | |
| UC211-203D1 | FC211D1 | S(SM)-UCFC211-203D1 | C(CM)-UCFC211-203D1 | | | | | | |
| UC212D1 | FC212D1 | S(SM)-UCFC212D1 | C(CM)-UCFC212D1 | 4 | 80 | 86 | 4.9 | 5.1 | 5.9 |
| UC212-204D1 | FC212D1 | S(SM)-UCFC212-204D1 | C(CM)-UCFC212-204D1 | | | | | | |
| UC212-205D1 | FC212D1 | S(SM)-UCFC212-205D1 | C(CM)-UCFC212-205D1 | 5/32 | 3 5/32 | 3 25/64 | 11 | 11 | 13 |
| UC212-206D1 | FC212D1 | S(SM)-UCFC212-206D1 | C(CM)-UCFC212-206D1 | | | | | | |
| UC212-207D1 | FC212D1 | S(SM)-UCFC212-207D1 | C(CM)-UCFC212-207D1 | | | | | | |
| UC213D1 | FC213D1 | S(SM)-UCFC213D1 | C(CM)-UCFC213D1 | 4 | 83.5 | 89.5 | 5.8 | 6.0 | 6.8 |
| UC213-208D1 | FC213D1 | S(SM)-UCFC213-208D1 | C(CM)-UCFC213-208D1 | 5/32 | 3 9/32 | 3 17/32 | 13 | 14 | 17 |
| UC213-209D1 | FC213D1 | S(SM)-UCFC213-209D1 | C(CM)-UCFC213-209D1 | | | | | | |
| UC214D1 | FC214D1 | — | C(CM)-UCFC214D1 | 4 | — | 98 | 7.0 | — | 8.0 |
| UC214-210D1 | FC214D1 | | C(CM)-UCFC214-210D1 | | | | | | |
| UC214-211D1 | FC214D1 | — | C(CM)-UCFC214-211D1 | 5/32 | — | 3 55/64 | 15 | — | 18 |
| UC214-212D1 | FC214D1 | | C(CM)-UCFC214-212D1 | | | | | | |
| UC215D1 | FC215D1 | — | C(CM)-UCFC215D1 | 4 | — | 102 | 7.4 | — | 8.8 |
| UC215-213D1 | FC215D1 | | C(CM)-UCFC215-213D1 | | | | | | |
| UC215-214D1 | FC215D1 | — | C(CM)-UCFC215-214D1 | 5/32 | — | 4 1/64 | 16 | — | 19 |
| UC215-215D1 | FC215D1 | | C(CM)-UCFC215-215D1 | | | | | | |
| UC215-300D1 | FC215D1 | | C(CM)-UCFC215-300D1 | | | | | | |
| UC216D1 | FC216D1 | — | C(CM)-UCFC216D1 | 4 | — | 106 | 9.1 | — | 10 |
| UC216-301D1 | FC216D1 | | C(CM)-UCFC216-301D1 | | | | | | |
| UC216-302D1 | FC216D1 | — | C(CM)-UCFC216-302D1 | 5/32 | — | 4 11/64 | 20 | — | 22 |
| UC216-303D1 | FC216D1 | | C(CM)-UCFC216-303D1 | | | | | | |

## Round flanged units cast housing w/ spigot joint
## Set screw type

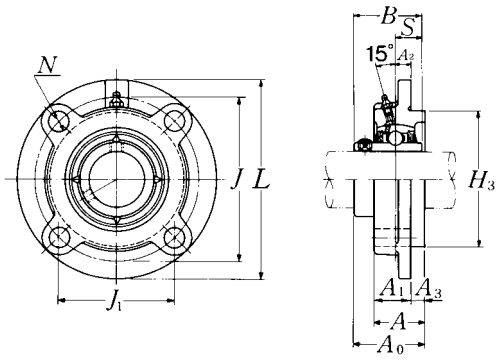


| Shaft dia. mm / inch | Unit number [1] | Nominal dimensions | | | | | | | | | | | | | Bolt size mm / inch |
|---|---|---|---|---|---|---|---|---|---|---|---|---|---|---|---|
| | | | | | | | mm | | inch | | | | | | |
| | | $L$ | $J$ | ($J_1$) | $A_2$ | $N$ | $A_3$ | $A_1$ | $A_{1C}$ | $A$ | $H_3$ | $A_0$ | $B$ | $S$ | |
| **85** | **UCFC217D1** | 250 | 208 | 147.1 | 18 | 23 | 18 | 45 | 45.5 | 63 | 180 | 87.6 | 85.7 | 34.1 | M20 |
| **3 1/4** | **UCFC217-304D1** | | | | | | | | | | | | | | |
| **3 5/16** | **UCFC217-305D1** | 9 27/32 | 8 3/16 | 5 51/64 | 45/64 | 29/32 | 45/64 | 1 25/32 | 1 51/64 | 2 31/64 | 7.0866 | 3 29/64 | 3.3740 | 1.343 | 3/4 |
| **3 7/16** | **UCFC217-307D1** | | | | | | | | | | | | | | |
| **90** | **UCFC218D1** | 265 | 220 | 155.6 | 22 | 23 | 18 | 50 | 50 | 68 | 190 | 96.3 | 96 | 39.7 | M20 |
| **3 1/2** | **UCFC218-308D1** | 10 7/16 | 8 21/32 | 6 1/8 | 55/64 | 29/32 | 45/64 | 1 31/32 | 1 31/32 | 2 43/64 | 7.4803 | 3 51/64 | 3.7795 | 1.563 | 3/4 |

Remarks: 1) These numbers indicate relubricatable type. If maintenance free type is needed, please order without suffix "D1".
Note: Please refer to page 36 for size of grease fitting.

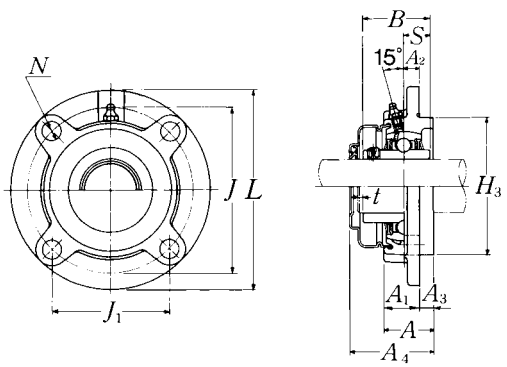


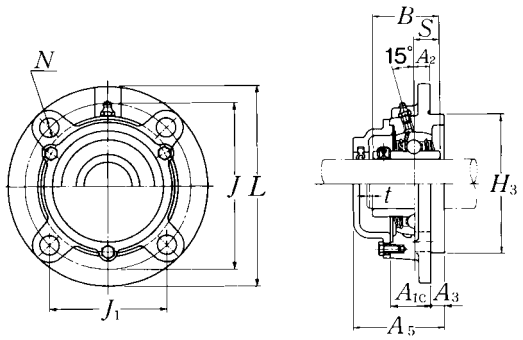


**Pressed steel dust cover type**
Open end: **S-UCFC···D1**
Closed end: **SM-UCFC···D1**

**Cast dust cover type**
Open end: **C-UCFC···D1**
Closed end: **CM-UCFC···D1**

| Bearing number | Housing [1] number | Unit number pressed [1] steel dust cover type | Unit number [1] cast dust cover type | Nominal dimensions | | | Mass of unit | | |
|---|---|---|---|---|---|---|---|---|---|
| | | | | mm | | inch | kg | | lb |
| | | | | $t$ max. | $A_4$ | $A_5$ | UCFC | S(SM) | C(CM) |
| UC217D1 | FC217D1 | — | **C(CM)-UCFC217D1** | 5 | — | 114 | 11 | — | 12 |
| UC217-304D1 | FC217D1 | — | **C(CM)-UCFC217-304D1** | $^{13}/_{64}$ | — | $4^{31}/_{64}$ | 24 | — | 26 |
| UC217-305D1 | FC217D1 | | **C(CM)-UCFC217-305D1** | | | | | | |
| UC217-307D1 | FC217D1 | | **C(CM)-UCFC217-307D1** | | | | | | |
| UC218D1 | FC218D1 | — | **C(CM)-UCFC218D1** | 5 | — | 122 | 13 | — | 15 |
| UC218-308D1 | FC218D1 | — | **C(CM)-UCFC218-308D1** | $^{13}/_{64}$ | — | $4^{51}/_{64}$ | 29 | — | 33 |

## Round flanged units cast housing w/ spigot joint
## Set screw type

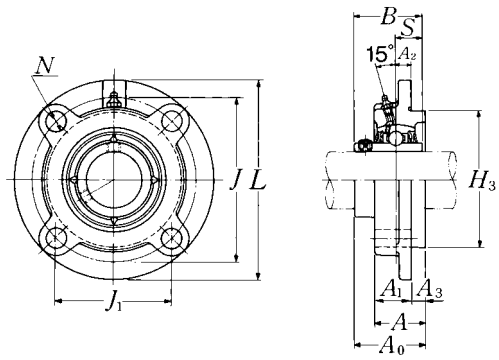


| Shaft dia. mm / inch | Unit number [1] | Nominal dimensions mm / inch L | J | (J1) | A2 | N | A3 | A1 | A | H3 | A0 | B | S | Bolt size mm / inch |
|---|---|---|---|---|---|---|---|---|---|---|---|---|---|---|
| 25 | UCFCX05D1 | 111 | 92 | 65.1 | 10 | 9.5 | 6 | 24 | 30 | 76 | 38.2 | 38.1 | 15.9 | M 8 |
| 13/16 | UCFCX05-013D1 | | | | | | | | | | | | | |
| 7/8 | UCFCX05-014D1 | 4 3/8 | 3 5/8 | 2 9/16 | 25/64 | 3/8 | 1/4 | 15/16 | 1 3/16 | 2.9921 | 1 1/2 | 1.5000 | 0.626 | 5/16 |
| 15/16 | UCFCX05-015D1 | | | | | | | | | | | | | |
| 1 | UCFCX05-100D1 | | | | | | | | | | | | | |
| 30 | UCFCX06D1 | 127 | 105 | 74.2 | 8 | 12 | 9.5 | 22.5 | 32 | 85 | 42.9 | 42.9 | 17.5 | M10 |
| 1 1/16 | UCFCX06-101D1 | | | | | | | | | | | | | |
| 1 1/8 | UCFCX06-102D1 | 5 | 4 9/64 | 2 59/64 | 5/16 | 15/32 | 3/8 | 7/8 | 1 27/64 | 3.3465 | 1 11/16 | 1.6890 | 0.689 | 3/8 |
| 1 3/16 | UCFCX06-103D1 | | | | | | | | | | | | | |
| 1 1/4 | UCFCX06-104D1 | | | | | | | | | | | | | |
| 35 | UCFCX07D1 | 133 | 111 | 78.5 | 9 | 12 | 11 | 26 | 37 | 92 | 50.2 | 49.2 | 19 | M10 |
| 1 5/16 | UCFCX07-105D1 | | | | | | | | | | | | | |
| 1 3/8 | UCFCX07-106D1 | 5 1/4 | 4 3/8 | 3 3/32 | 23/64 | 15/32 | 7/16 | 1 1/32 | 1 29/64 | 3.6220 | 1 31/32 | 1.9370 | 0.748 | 3/8 |
| 1 7/16 | UCFCX07-107D1 | | | | | | | | | | | | | |
| 40 | UCFCX08D1 | 133 | 111 | 78.5 | 9 | 12 | 11 | 26 | 37 | 92 | 50.2 | 49.2 | 19 | M10 |
| 1 1/2 | UCFCX08-108D1 | 5 1/4 | 4 3/8 | 3 3/32 | 23/64 | 15/32 | 7/16 | 1 1/32 | 1 29/64 | 3.6220 | 1 31/32 | 1.9370 | 0.748 | 3/8 |
| 1 9/16 | UCFCX08-109D1 | | | | | | | | | | | | | |
| 45 | UCFCX09D1 | 155 | 130 | 91.9 | 8 | 14 | 12 | 25 | 37 | 108 | 52.6 | 51.6 | 19 | M12 |
| 1 5/8 | UCFCX09-110D1 | | | | | | | | | | | | | |
| 1 11/16 | UCFCX09-111D1 | 6 3/32 | 5 1/8 | 3 5/8 | 5/16 | 35/64 | 15/32 | 31/32 | 1 29/64 | 4.2520 | 2 5/64 | 2.0315 | 0.748 | 7/16 |
| 1 3/4 | UCFCX09-112D1 | | | | | | | | | | | | | |
| 1 13/16 | UCFCX09-113D1 | | | | | | | | | | | | | |
| 50 | UCFCX10D1 | 162 | 136 | 96.2 | 7 | 14 | 16 | 25 | 41 | 118 | 56.4 | 55.6 | 22.2 | M12 |
| 1 7/8 | UCFCX10-114D1 | | | | | | | | | | | | | |
| 1 15/16 | UCFCX10-115D1 | 6 3/8 | 5 23/64 | 3 25/32 | 9/32 | 35/64 | 5/8 | 31/32 | 1 39/64 | 4.6457 | 2 7/32 | 2.1890 | 0.874 | 7/16 |
| 2 | UCFCX10-200D1 | | | | | | | | | | | | | |

Remarks: 1) These numbers indicate relubricatable type. If maintenance free type is needed, please order without suffix "D1".
Note: Please refer to page 36 for size of grease fitting.

| Bearing number | Housing [1)] number | Mass of unit kg lb |
|---|---|---|
| UCX05D1 | FCX05D1 | 1.2 |
| UCX05-013D1 | FCX05D1 | |
| UCX05-014D1 | FCX05D1 | 2.7 |
| UCX05-015D1 | FCX05D1 | |
| UCX05-100D1 | FCX05D1 | |
| UCX06D1 | FCX06D1 | 1.7 |
| UCX06-101D1 | FCX06D1 | |
| UCX06-102D1 | FCX06D1 | 3.8 |
| UCX06-103D1 | FCX06D1 | |
| UC207-104D1 | FCX06D1 | |
| UCX07D1 | FCX07D1 | 1.9 |
| UCX07-105D1 | FCX07D1 | |
| UCX07-106D1 | FCX07D1 | 4.2 |
| UCX07-107D1 | FCX07D1 | |
| UCX08D1 | FCX08D1 | 2.0 |
| UCX08-108D1 | FCX08D1 | 4.4 |
| UCX08-109D1 | FCX08D1 | |
| UCX09D1 | FCX09D1 | 2.6 |
| UCX09-110D1 | FCX09D1 | |
| UCX09-111D1 | FCX09D1 | 5.7 |
| UCX09-112D1 | FCX09D1 | |
| UC210-113D1 | FCX09D1 | |
| UCX10D1 | FCX10D1 | 3.1 |
| UCX10-114D1 | FCX10D1 | |
| UCX10-115D1 | FCX10D1 | 6.8 |
| UC211-200D1 | FCX10D1 | |

## Round flanged units cast housing w/ spigot joint
## Set screw type

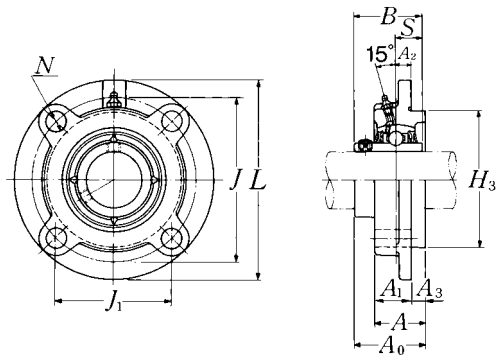


| Shaft dia. mm / inch | Unit number [1] | Nominal dimensions mm / inch L | J | (J1) | A2 | N | A3 | A1 | A | H3 | A0 | B | S | Bolt size mm / inch |
|---|---|---|---|---|---|---|---|---|---|---|---|---|---|---|
| **55** | **UCFCX11D1** | 180 | 152 | 107.5 | 4 | 16 | 22 | 26 | 48 | 127 | 65.7 | 65.1 | 25.4 | M14 |
| 2 1/16 | UCFCX11-201D1 | | | | | | | | | | | | | |
| 2 1/8 | UCFCX11-202D1 | | | | | | | | | | | | | |
| 2 3/16 | UCFCX11-203D1 | 7 3/32 | 5 63/64 | 4 15/64 | 5/32 | 5/8 | 55/64 | 1 1/32 | 1 57/64 | 5.0000 | 2 19/32 | 2.5630 | 1.000 | 1/2 |
| 2 1/4 | UCFCX11-204D1 | | | | | | | | | | | | | |
| 2 5/16 | UCFCX11-205D1 | | | | | | | | | | | | | |
| **60** | **UCFCX12D1** | 194 | 165 | 116.7 | 11 | 16 | 20 | 33 | 53 | 140 | 70.7 | 65.1 | 25.4 | M14 |
| 2 3/8 | UCFCX12-206D1 | 7 5/8 | 6 1/2 | 4 19/32 | 7/16 | 5/8 | 25/32 | 1 5/16 | 2 5/64 | 5.5118 | 2 25/32 | 2.5630 | 1.000 | 1/2 |
| 2 7/16 | UCFCX12-207D1 | | | | | | | | | | | | | |
| **65** | **UCFCX13D1** | 194 | 165 | 116.7 | 11 | 16 | 20 | 33 | 53 | 140 | 75.4 | 74.6 | 30.2 | M14 |
| 2 1/2 | UCFCX13-208D1 | 7 5/8 | 6 1/2 | 4 19/32 | 7/16 | 5/8 | 25/32 | 1 5/16 | 2 5/64 | 5.5118 | 2 31/32 | 2.9370 | 1.189 | 1/2 |
| 2 9/16 | UCFCX13-209D1 | | | | | | | | | | | | | |
| **70** | **UCFCX14D1** | 222 | 190 | 134.4 | 14 | 19 | 20 | 36 | 56 | 164 | 78.5 | 77.8 | 33.3 | M16 |
| 2 5/8 | UCFCX14-210D1 | | | | | | | | | | | | | |
| 2 11/16 | UCFCX14-211D1 | 8 3/4 | 7 31/64 | 5 9/32 | 35/64 | 3/4 | 25/32 | 1 13/32 | 2 13/64 | 6.4567 | 3 3/32 | 3.0630 | 1.311 | 5/8 |
| 2 3/4 | UCFCX14-212D1 | | | | | | | | | | | | | |
| **75** | **UCFCX15D1** | 222 | 190 | 134.4 | 12 | 19 | 22 | 35 | 57 | 164 | 83.3 | 82.6 | 33.3 | M16 |
| 2 13/16 | UCFCX15-213D1 | | | | | | | | | | | | | |
| 2 7/8 | UCFCX15-214D1 | 8 3/4 | 7 31/64 | 5 9/32 | 15/32 | 3/4 | 55/64 | 1 3/8 | 2 1/4 | 6.4567 | 3 9/32 | 3.2520 | 1.311 | 5/8 |
| 2 15/16 | UCFCX15-215D1 | | | | | | | | | | | | | |
| 3 | UCFCX15-300D1 | | | | | | | | | | | | | |
| **80** | **UCFCX16D1** | 260 | 219 | 154.9 | 10 | 23 | 25 | 36 | 61 | 186 | 86.6 | 85.7 | 34.1 | M20 |
| 3 1/16 | UCFCX16-301D1 | | | | | | | | | | | | | |
| 3 1/8 | UCFCX16-302D1 | 10 1/4 | 8 5/8 | 6 3/32 | 25/64 | 29/32 | 63/64 | 1 13/32 | 2 13/32 | 7.3228 | 3 13/32 | 3.3740 | 1.343 | 3/4 |
| 3 3/16 | UCFCX16-303D1 | | | | | | | | | | | | | |
| 3 1/4 | UCFCX16-304D1 | | | | | | | | | | | | | |
| **85** | **UCFCX17D1** | 260 | 219 | 154.9 | 10 | 23 | 25 | 36 | 61 | 186 | 91.3 | 96 | 39.7 | M20 |
| 3 5/16 | UCFCX17-305D1 | 10 1/4 | 8 5/8 | 6 3/32 | 25/64 | 29/32 | 63/64 | 1 13/32 | 2 13/32 | 7.3228 | 3 19/32 | 3.7795 | 1.563 | 3/4 |
| 3 7/16 | UCFCX17-307D1 | | | | | | | | | | | | | |

Remarks: 1) These numbers indicate relubricatable type. If maintenance free type is needed, please order without suffix "D1".
Note: Please refer to page 36 for size of grease fitting.

| Bearing number | Housing [1)] number | Mass of unit kg lb |
|---|---|---|
| UCX11D1 | FCX11D1 | 4.2 |
| UCX11-201D1 | FCX11D1 | |
| UCX11-202D1 | FCX11D1 | |
| UCX11-203D1 | FCX11D1 | 9.3 |
| UC212-204D1 | FCX11D1 | |
| UC212-205D1 | FCX11D1 | |
| UCX12D1 | FCX12D1 | 5.5 |
| UCX12-206D1 | FCX12D1 | 12 |
| UCX12-207D1 | FCX12D1 | |
| UCX13D1 | FCX13D1 | 5.7 |
| UCX13-208D1 | FCX13D1 | 13 |
| UCX13-209D1 | FCX13D1 | |
| UCX14D1 | FCX14D1 | 7.3 |
| UCX14-210D1 | FCX14D1 | |
| UCX14-211D1 | FCX14D1 | 16 |
| UCX14-212D1 | FCX14D1 | |
| UCX15D1 | FCX15D1 | 8.0 |
| UCX15-213D1 | FCX15D1 | |
| UCX15-214D1 | FCX15D1 | 18 |
| UCX15-215D1 | FCX15D1 | |
| UCX15-300D1 | FCX15D1 | |
| UCX16D1 | FCX16D1 | 12 |
| UCX16-301D1 | FCX16D1 | |
| UCX16-302D1 | FCX16D1 | 26 |
| UCX16-303D1 | FCX16D1 | |
| UC217-304D1 | FCX16D1 | |
| UCX17D1 | FCX17D1 | 12 |
| UCX17-305D1 | FCX17D1 | 26 |
| UCX17-307D1 | FCX17D1 | |

## Round flanged units cast housing w/ spigot joint
## Set screw type

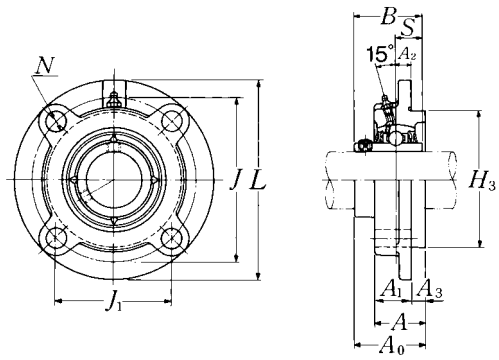


| Shaft dia. mm / inch | Unit number [1] | Nominal dimensions mm / inch L | J | (J1) | A2 | N | A3 | A1 | A | H3 | A0 | B | S | Bolt size mm / inch |
|---|---|---|---|---|---|---|---|---|---|---|---|---|---|---|
| **90** | **UCFCX18D1** | 260 | 219 | 154.9 | 12 | 23 | 28 | 43 | 71 | 186 | 101.1 | 104 | 42.9 | M20 |
| **3 7/16** | **UCFCX18-307D1** | 10 1/4 | 8 5/8 | 6 3/32 | 15/32 | 29/32 | 1 7/64 | 1 11/16 | 2 51/64 | 7.3228 | 3 63/64 | 4.0945 | 1.689 | 3/4 |
| **3 1/2** | **UCFCX18-308D1** | | | | | | | | | | | | | |
| **100** | **UCFCX20D1** | 276 | 238 | 168.3 | 22 | 23 | 28 | 66 | 94 | 206 | 118.3 | 117.5 | 49.2 | M20 |
| **3 13/16** | **UCFCX20-313D1** | | | | | | | | | | | | | |
| **3 7/8** | **UCFCX20-314D1** | 10 7/8 | 9 3/8 | 6 5/8 | 55/64 | 29/32 | 1 7/64 | 2 19/32 | 3 45/64 | 8.1102 | 4 21/32 | 4.6260 | 1.937 | 3/4 |
| **3 15/16** | **UCFCX20-315D1** | | | | | | | | | | | | | |
| **4** | **UCFCX20-400D1** | | | | | | | | | | | | | |

Remarks: 1) These numbers indicate relubricatable type. If maintenance free type is needed, please order without suffix "D1".
Note: Please refer to page 36 for size of grease fitting.

| Bearing number | Housing [1)] number | Mass of unit kg lb |
|---|---|---|
| UCX18D1 | FCX18D1 | 12 |
| UCX18-307D1 | FCX18D1 | 26 |
| UCX18-308D1 | FCX18D1 | |
| UCX20D1 | FCX20D1 | 18 |
| UCX20-313D1 | FCX20D1 | 40 |
| UCX20-314D1 | FCX20D1 | |
| UCX20-315D1 | FCX20D1 | |
| UCX20-400D1 | FCX20D1 | |

## Round flanged units w/ spigot joint (Steel series)
## Set screw type

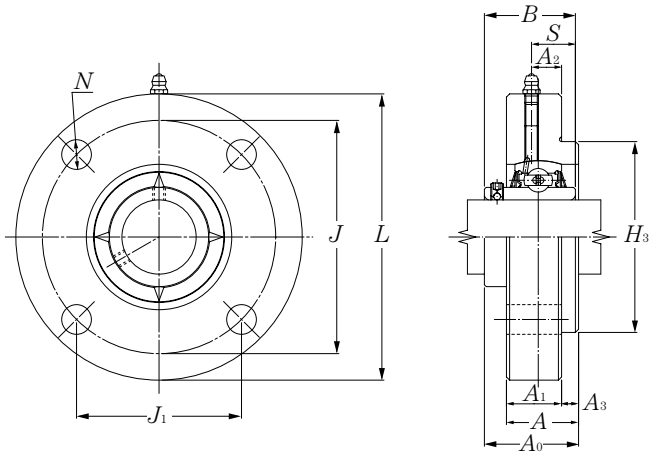


| Shaft dia. mm | Unit number [1] | Nominal dimensions mm | | | | | | | | | | | | Bolt size mm |
|---|---|---|---|---|---|---|---|---|---|---|---|---|---|---|
| | | $L$ | $J$ | $(J_1)$ | $A_2$ | $N$ | $A_3$ | $A_1$ | $A$ | $H_3$ | $A_0$ | $B$ | $S$ | |
| 12 | UCFCG201D1 | 100 | 78 | 55.2 | 10 | 12 | 5 | 20.5 | 25.5 | 62 | 33.3 | 31 | 12.7 | M10 |
| 15 | UCFCG202D1 | 100 | 78 | 55.2 | 10 | 12 | 5 | 20.5 | 25.5 | 62 | 33.3 | 31 | 12.7 | M10 |
| 17 | UCFCG203D1 | 100 | 78 | 55.2 | 10 | 12 | 5 | 20.5 | 25.5 | 62 | 33.3 | 31 | 12.7 | M10 |
| 20 | UCFCG204D1 | 100 | 78 | 55.2 | 10 | 12 | 5 | 20.5 | 25.5 | 62 | 33.3 | 31 | 12.7 | M10 |
| 25 | UCFCG205D1 | 115 | 90 | 63.6 | 10 | 12 | 6 | 21 | 27 | 70 | 35.8 | 34.1 | 14.3 | M10 |
| 30 | UCFCG206D1 | 125 | 100 | 70.7 | 10 | 12 | 8 | 23 | 31 | 80 | 40.2 | 38.1 | 15.9 | M10 |
| 35 | UCFCG207D1 | 135 | 110 | 77.8 | 11 | 14 | 8 | 26 | 34 | 90 | 44.4 | 42.9 | 17.5 | M12 |
| 40 | UCFCG208D1 | 145 | 120 | 84.9 | 11 | 14 | 10 | 26 | 36 | 100 | 51.2 | 49.2 | 19 | M12 |
| 45 | UCFCG209D1 | 160 | 132 | 93.3 | 10 | 16 | 12 | 26 | 38 | 105 | 52.2 | 49.2 | 19 | M14 |
| 50 | UCFCG210D1 | 165 | 138 | 97.6 | 10 | 16 | 12 | 28 | 40 | 110 | 54.6 | 51.6 | 19 | M14 |
| 55 | UCFCG211D1 | 185 | 150 | 106.1 | 13 | 19 | 12 | 31 | 43 | 125 | 58.4 | 55.6 | 22.2 | M16 |
| 60 | UCFCG212D1 | 195 | 160 | 113.1 | 17 | 19 | 12 | 36 | 48 | 135 | 68.7 | 65.1 | 25.4 | M16 |
| 65 | UCFCG213D1 | 205 | 170 | 120.2 | 16 | 19 | 14 | 36 | 50 | 145 | 69.7 | 65.1 | 25.4 | M16 |
| 70 | UCFCG214D1 | 215 | 177 | 125.2 | 17 | 19 | 14 | 40 | 54 | 150 | 75.4 | 74.6 | 30.2 | M16 |
| 75 | UCFCG215D1 | 220 | 184 | 130.1 | 18 | 19 | 16 | 40 | 56 | 160 | 78.5 | 77.8 | 33.3 | M16 |
| 80 | UCFCG216D1 | 240 | 200 | 141.4 | 18 | 23 | 16 | 42 | 58 | 170 | 83.3 | 82.6 | 33.3 | M20 |
| 85 | UCFCG217D1 | 250 | 208 | 147.1 | 18 | 23 | 18 | 45 | 63 | 180 | 87.6 | 85.7 | 34.1 | M20 |
| 90 | UCFCG218D1 | 265 | 220 | 155.6 | 22 | 23 | 18 | 50 | 68 | 190 | 96.3 | 96 | 39.7 | M20 |

Remarks: 1) These numbers indicate relubricatable type. If maintenance free type is needed, please order without suffix "D1".
Note: Please refer to page 36 for size of grease fitting.

| Bearing number | Housing [1] number | Mass of unit kg |
|---|---|---|
| UC201D1 | FCG204D1 | 1.2 |
| UC202D1 | FCG204D1 | 1.2 |
| UC203D1 | FCG204D1 | 1.1 |
| UC204D1 | FCG204D1 | 1.1 |
| UC205D1 | FCG205D1 | 1.6 |
| UC206D1 | FCG206D1 | 2.0 |
| UC207D1 | FCG207D1 | 2.6 |
| UC208D1 | FCG208D1 | 3.1 |
| UC209D1 | FCG209D1 | 3.8 |
| UC210D1 | FCG210D1 | 4.2 |
| UC211D1 | FCG211D1 | 5.8 |
| UC212D1 | FCG212D1 | 7.4 |
| UC213D1 | FCG213D1 | 8.1 |
| UC214D1 | FCG214D1 | 9.9 |
| UC215D1 | FCG215D1 | 10 |
| UC216D1 | FCG216D1 | 13 |
| UC217D1 | FCG217D1 | 15 |
| UC218D1 | FCG218D1 | 19 |

## Rhombus flanged units cast housing
## Set screw type

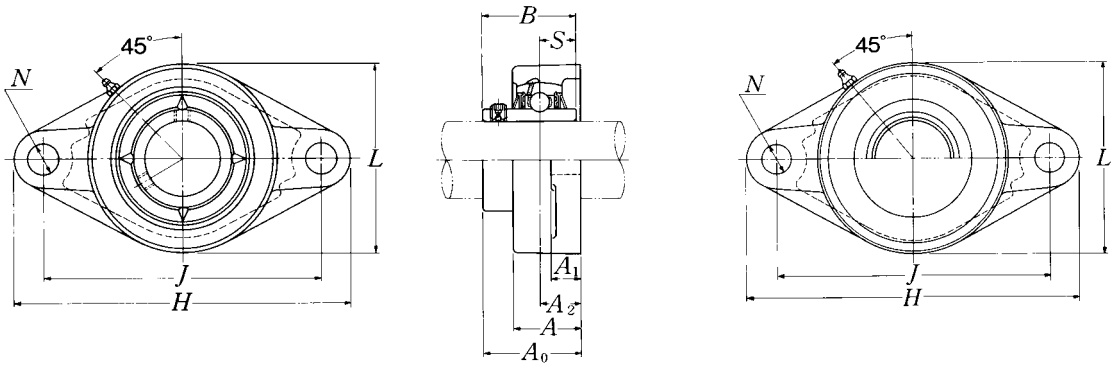


**Pressed steel dust cover type**
Open end: **S-UCFL···D1**
Closed end: **SM-UCFL···D1**

| Shaft dia. mm / inch | Unit number [1] | Nominal dimensions (mm / inch) H | J | $A_2$ | $A_1$ | A | N | L | $A_0$ | B | S | Bolt size mm / inch | Bearing number |
|---|---|---|---|---|---|---|---|---|---|---|---|---|---|
| 12 | UCFL201D1 | 113 | 90 | 15 | 11 | 25.5 | 12 | 60 | 33.3 | 31 | 12.7 | M10 | UC201D1 |
| 1/2 | UCFL201-008D1 | 4 7/16 | 3 35/64 | 19/32 | 7/16 | 1 | 15/32 | 2 3/8 | 1 5/16 | 1.2205 | 0.500 | 3/8 | UC201-008D1 |
| 15 | UCFL202D1 | 113 | 90 | 15 | 11 | 25.5 | 12 | 60 | 33.3 | 31 | 12.7 | M10 | UC202D1 |
| 9/16 | UCFL202-009D1 | 4 7/16 | 3 35/64 | 19/32 | 7/16 | 1 | 15/32 | 2 3/8 | 1 5/16 | 1.2205 | 0.500 | 3/8 | UC202-009D1 |
| 5/8 | UCFL202-010D1 | | | | | | | | | | | | UC202-010D1 |
| 17 | UCFL203D1 | 113 | 90 | 15 | 11 | 25.5 | 12 | 60 | 33.3 | 31 | 12.7 | M10 | UC203D1 |
| 11/16 | UCFL203-011D1 | 4 7/16 | 3 35/64 | 19/32 | 7/16 | 1 | 15/32 | 2 3/8 | 1 5/16 | 1.2205 | 0.500 | 3/8 | UC203-011D1 |
| 20 | UCFL204D1 | 113 | 90 | 15 | 11 | 25.5 | 12 | 60 | 33.3 | 31 | 12.7 | M10 | UC204D1 |
| 3/4 | UCFL204-012D1 | 4 7/16 | 3 35/64 | 19/32 | 7/16 | 1 | 15/32 | 2 3/8 | 1 5/16 | 1.2205 | 0.500 | 3/8 | UC204-012D1 |
| 25 | UCFL205D1 | 130 | 99 | 16 | 13 | 27 | 16 | 68 | 35.8 | 34.1 | 14.3 | M14 | UC205D1 |
| 13/16 | UCFL205-013D1 | | | | | | | | | | | | UC205-013D1 |
| 7/8 | UCFL205-014D1 | 5 1/8 | 3 57/64 | 5/8 | 1/2 | 1 1/16 | 5/8 | 2 11/16 | 1 13/32 | 1.3425 | 0.563 | 1/2 | UC205-014D1 |
| 15/16 | UCFL205-015D1 | | | | | | | | | | | | UC205-015D1 |
| 1 | UCFL205-100D1 | | | | | | | | | | | | UC205-100D1 |
| 30 | UCFL206D1 | 148 | 117 | 18 | 13 | 31 | 16 | 80 | 40.2 | 38.1 | 15.9 | M14 | UC206D1 |
| 1 1/16 | UCFL206-101D1 | | | | | | | | | | | | UC206-101D1 |
| 1 1/8 | UCFL206-102D1 | 5 13/16 | 4 39/64 | 45/64 | 1/2 | 1 7/32 | 5/8 | 3 5/32 | 1 37/64 | 1.5000 | 0.626 | 1/2 | UC206-102D1 |
| 1 3/16 | UCFL206-103D1 | | | | | | | | | | | | UC206-103D1 |
| 1 1/4 | UCFL206-104D1 | | | | | | | | | | | | UC206-104D1 |
| 35 | UCFL207D1 | 161 | 130 | 19 | 15 | 34 | 16 | 90 | 44.4 | 42.9 | 17.5 | M14 | UC207D1 |
| 1 1/4 | UCFL207-104D1 | | | | | | | | | | | | UC207-104D1 |
| 1 5/16 | UCFL207-105D1 | 6 11/32 | 5 1/8 | 3/4 | 19/32 | 1 11/32 | 5/8 | 3 17/32 | 1 3/4 | 1.6890 | 0.689 | 1/2 | UC207-105D1 |
| 1 3/8 | UCFL207-106D1 | | | | | | | | | | | | UC207-106D1 |
| 1 7/16 | UCFL207-107D1 | | | | | | | | | | | | UC207-107D1 |
| 40 | UCFL208D1 | 175 | 144 | 21 | 15 | 36 | 16 | 100 | 51.2 | 49.2 | 19 | M14 | UC208D1 |
| 1 1/2 | UCFL208-108D1 | 6 7/8 | 5 43/64 | 53/64 | 19/32 | 1 13/32 | 5/8 | 3 15/16 | 2 1/64 | 1.9370 | 0.748 | 1/2 | UC208-108D1 |
| 1 9/16 | UCFL208-109D1 | | | | | | | | | | | | UC208-109D1 |
| 45 | UCFL209D1 | 188 | 148 | 22 | 16 | 38 | 19 | 108 | 52.2 | 49.2 | 19 | M16 | UC209D1 |
| 1 5/8 | UCFL209-110D1 | | | | | | | | | | | | UC209-110D1 |
| 1 11/16 | UCFL209-111D1 | 7 13/32 | 5 53/64 | 55/64 | 5/8 | 1 1/2 | 3/4 | 4 1/4 | 2 1/16 | 1.9370 | 0.748 | 5/8 | UC209-111D1 |
| 1 3/4 | UCFL209-112D1 | | | | | | | | | | | | UC209-112D1 |

Remarks: 1) These numbers indicate relubricatable type. If maintenance free type is needed, please order without suffix "D1".
Note: Please refer to page 36 for size of grease fitting.

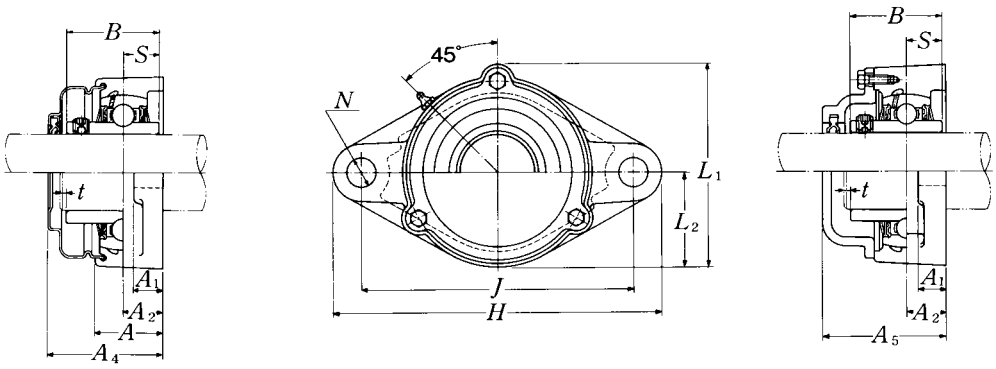


**Cast dust cover type**
Open end: **C-UCFL···D1**
Closed end: **CM-UCFL···D1**

| Housing [1] number | Unit number [1] pressed steel dust cover type | Unit number [1] cast dust cover type | Nominal dimensions | | | | | Mass of unit | | |
|---|---|---|---|---|---|---|---|---|---|---|
| | | | mm | | | inch | | kg | | lb |
| | | | $t$ max. | $A_4$ | $A_5$ | $L_1$ | $L_2$ | UCFL | S(SM) | C(CM) |
| FL204D1 | S(SM)-UCFL201D1 | C(CM)-UCFL201D1 | 2 | 40.5 | 46 | 67 | 30 | 0.5 | 0.5 | 0.6 |
| FL204D1 | S(SM)-UCFL201-008D1 | C(CM)-UCFL201-008D1 | 5/64 | 1 19/32 | 1 13/16 | 2 5/8 | 1 3/16 | 1.1 | 1.1 | 1.3 |
| FL204D1 | S(SM)-UCFL202D1 | C(CM)-UCFL202D1 | 2 | 40.5 | 46 | 67 | 30 | 0.5 | 0.5 | 0.6 |
| FL204D1 | S(SM)-UCFL202-009D1 | C(CM)-UCFL202-009D1 | 5/64 | 1 19/32 | 1 13/16 | 2 5/8 | 1 3/16 | 1.1 | 1.1 | 1.3 |
| FL204D1 | S(SM)-UCFL202-010D1 | C(CM)-UCFL202-009D1 | | | | | | | | |
| FL204D1 | S(SM)-UCFL203D1 | C(CM)-UCFL203D1 | 2 | 40.5 | 46 | 67 | 30 | 0.5 | 0.5 | 0.6 |
| FL204D1 | S(SM)-UCFL203-011D1 | C(CM)-UCFL203-011D1 | 5/64 | 1 19/32 | 1 13/32 | 2 5/8 | 1 3/16 | 1.1 | 1.1 | 1.3 |
| FL204D1 | S(SM)-UCFL204D1 | C(CM)-UCFL204D1 | 2 | 40.5 | 46 | 67 | 30 | 0.4 | 0.4 | 0.6 |
| FL204D1 | S(SM)-UCFL204-012D1 | C(CM)-UCFL204-012D1 | 5/64 | 1 19/32 | 1 13/16 | 2 5/8 | 1 3/16 | 0.9 | 0.9 | 1.3 |
| FL205D1 | S(SM)-UCFL205D1 | C(CM)-UCFL205D1 | 2 | 44.5 | 51 | 74 | 34 | 0.6 | 0.6 | 0.8 |
| FL205D1 | S(SM)-UCFL205-013D1 | C(CM)-UCFL205-013D1 | | | | | | | | |
| FL205D1 | S(SM)-UCFL205-014D1 | C(CM)-UCFL205-014D1 | 5/64 | 1 3/4 | 2 | 2 29/32 | 1 11/32 | 1.3 | 1.3 | 1.8 |
| FL205D1 | S(SM)-UCFL205-015D1 | C(CM)-UCFL205-015D1 | | | | | | | | |
| FL205D1 | S(SM)-UCFL205-100D1 | C(CM)-UCFL205-100D1 | | | | | | | | |
| FL206D1 | S(SM)-UCFL206D1 | C(CM)-UCFL206D1 | 2 | 49 | 56 | 85 | 40 | 0.9 | 0.9 | 1.2 |
| FL206D1 | S(SM)-UCFL206-101D1 | C(CM)-UCFL206-101D1 | | | | | | | | |
| FL206D1 | S(SM)-UCFL206-102D1 | C(CM)-UCFL206-102D1 | 5/64 | 1 15/16 | 2 7/32 | 3 11/32 | 1 9/16 | 2.0 | 2.0 | 2.6 |
| FL206D1 | S(SM)-UCFL206-103D1 | C(CM)-UCFL206-103D1 | | | | | | | | |
| FL206D1 | S(SM)-UCFL206-104D1 | C(CM)-UCFL206-104D1 | | | | | | | | |
| FL207D1 | S(SM)-UCFL207D1 | C(CM)-UCFL207D1 | 3 | 55 | 59 | 97 | 45 | 1.2 | 1.2 | 1.4 |
| FL207D1 | S(SM)-UCFL207-104D1 | C(CM)-UCFL207-104D1 | | | | | | | | |
| FL207D1 | S(SM)-UCFL207-105D1 | C(CM)-UCFL207-105D1 | 1/8 | 2 5/32 | 2 5/16 | 3 13/16 | 1 25/32 | 2.6 | 2.6 | 3.1 |
| FL207D1 | S(SM)-UCFL207-106D1 | C(CM)-UCFL207-106D1 | | | | | | | | |
| FL207D1 | S(SM)-UCFL207-107D1 | C(CM)-UCFL207-107D1 | | | | | | | | |
| FL208D1 | S(SM)-UCFL208D1 | C(CM)-UCFL208D1 | 3 | 62 | 66 | 106 | 50 | 1.5 | 1.5 | 1.9 |
| FL208D1 | S(SM)-UCFL208-108D1 | C(CM)-UCFL208-108D1 | 1/8 | 2 7/16 | 2 19/32 | 4 3/16 | 1 31/32 | 3.3 | 3.3 | 4.2 |
| FL208D1 | S(SM)-UCFL208-109D1 | C(CM)-UCFL208-109D1 | | | | | | | | |
| FL209D1 | S(SM)-UCFL209D1 | C(CM)-UCFL209D1 | 3 | 63 | 70 | 113 | 54 | 1.8 | 1.9 | 2.3 |
| FL209D1 | S(SM)-UCFL209-110D1 | C(CM)-UCFL209-110D1 | | | | | | | | |
| FL209D1 | S(SM)-UCFL209-111D1 | C(CM)-UCFL209-111D1 | 1/8 | 2 15/32 | 2 3/4 | 4 7/16 | 2 1/8 | 4.0 | 4.2 | 5.1 |
| FL209D1 | S(SM)-UCFL209-112D1 | C(CM)-UCFL209-112D1 | | | | | | | | |

## Rhombus flanged units cast housing
## Set screw type

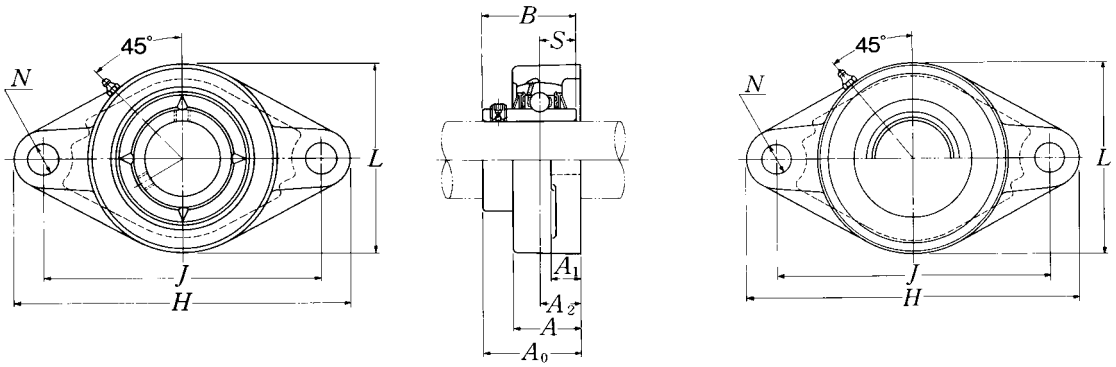


**Pressed steel dust cover type**
Open end: **S-UCFL···D1**
Closed end: **SM-UCFL···D1**

| Shaft dia. mm / inch | Unit number [1] | Nominal dimensions H | J | A2 | A1 | A (mm) | N | L (inch) | A0 | B | S | Bolt size mm / inch | Bearing number |
|---|---|---|---|---|---|---|---|---|---|---|---|---|---|
| **50** | **UCFL210D1** | 197 | 157 | 22 | 16 | 40 | 19 | 115 | 54.6 | 51.6 | 19 | M16 | UC210D1 |
| **1 13/16** | **UCFL210-113D1** | | | | | | | | | | | | UC210-113D1 |
| **1 7/8** | **UCFL210-114D1** | 7 3/4 | 6 3/16 | 55/64 | 5/8 | 1 9/16 | 3/4 | 4 17/32 | 2 5/32 | 2.0315 | 0.748 | 5/8 | UC210-114D1 |
| **1 15/16** | **UCFL210-115D1** | | | | | | | | | | | | UC210-115D1 |
| **2** | **UCFL210-200D1** | | | | | | | | | | | | UC210-200D1 |
| **55** | **UCFL211D1** | 224 | 184 | 25 | 18 | 43 | 19 | 130 | 58.4 | 55.6 | 22.2 | M16 | UC211D1 |
| **2** | **UCFL211-200D1** | | | | | | | | | | | | UC211-200D1 |
| **2 1/16** | **UCFL211-201D1** | 8 13/16 | 7 1/4 | 63/64 | 23/32 | 1 11/16 | 3/4 | 5 1/8 | 2 19/64 | 2.1890 | 0.874 | 5/8 | UC211-201D1 |
| **2 1/8** | **UCFL211-202D1** | | | | | | | | | | | | UC211-202D1 |
| **2 3/16** | **UCFL211-203D1** | | | | | | | | | | | | UC211-203D1 |
| **60** | **UCFL212D1** | 250 | 202 | 29 | 18 | 48 | 23 | 140 | 68.7 | 65.1 | 25.4 | M20 | UC212D1 |
| **2 1/4** | **UCFL212-204D1** | | | | | | | | | | | | UC212-204D1 |
| **2 5/16** | **UCFL212-205D1** | 9 27/32 | 7 61/64 | 1 9/64 | 23/32 | 1 7/8 | 29/32 | 5 1/2 | 2 45/64 | 2.5630 | 1.000 | 3/4 | UC212-205D1 |
| **2 3/8** | **UCFL212-206D1** | | | | | | | | | | | | UC212-206D1 |
| **2 7/16** | **UCFL212-207D1** | | | | | | | | | | | | UC212-207D1 |
| **65** | **UCFL213D1** | 258 | 210 | 30 | 22 | 50 | 23 | 155 | 69.7 | 65.1 | 25.4 | M20 | UC213D1 |
| **2 1/2** | **UCFL213-208D1** | 10 5/32 | 8 17/64 | 1 3/16 | 7/8 | 1 31/32 | 29/32 | 6 3/32 | 2 3/4 | 2.5630 | 1.000 | 3/4 | UC213-208D1 |
| **2 9/16** | **UCFL213-209D1** | | | | | | | | | | | | UC213-209D1 |
| **70** | **UCFL214D1** | 265 | 216 | 31 | 22 | 54 | 23 | 160 | 75.4 | 74.6 | 30.2 | M20 | UC214D1 |
| **2 5/8** | **UCFL214-210D1** | | | | | | | | | | | | UC214-210D1 |
| **2 11/16** | **UCFL214-211D1** | 10 7/16 | 8 1/2 | 1 7/32 | 7/8 | 2 1/8 | 29/32 | 6 5/16 | 2 31/32 | 2.9370 | 1.189 | 3/4 | UC214-211D1 |
| **2 3/4** | **UCFL214-212D1** | | | | | | | | | | | | UC214-212D1 |
| **75** | **UCFL215D1** | 275 | 225 | 34 | 22 | 56 | 23 | 165 | 78.5 | 77.8 | 33.3 | M20 | UC215D1 |
| **2 13/16** | **UCFL215-213D1** | | | | | | | | | | | | UC215-213D1 |
| **2 7/8** | **UCFL215-214D1** | 10 13/16 | 8 55/64 | 1 11/32 | 7/8 | 2 7/32 | 29/32 | 6 1/2 | 3 3/32 | 3.0630 | 1.311 | 3/4 | UC215-214D1 |
| **2 15/16** | **UCFL215-215D1** | | | | | | | | | | | | UC215-215D1 |
| **3** | **UCFL215-300D1** | | | | | | | | | | | | UC215-300D1 |
| **80** | **UCFL216D1** | 290 | 233 | 34 | 22 | 58 | 25 | 180 | 83.3 | 82.6 | 33.3 | M22 | UC216D1 |
| **3 1/16** | **UCFL216-301D1** | | | | | | | | | | | | UC216-301D1 |
| **3 1/8** | **UCFL216-302D1** | 11 13/32 | 9 11/64 | 1 11/32 | 7/8 | 2 9/32 | 63/64 | 7 3/32 | 3 9/32 | 3.2520 | 1.311 | 7/8 | UC216-302D1 |
| **3 3/16** | **UCFL216-303D1** | | | | | | | | | | | | UC216-303D1 |

Remarks: 1) These numbers indicate relubricatable type. If maintenance free type is needed, please order without suffix "D1".
Note: Please refer to page 36 for size of grease fitting.

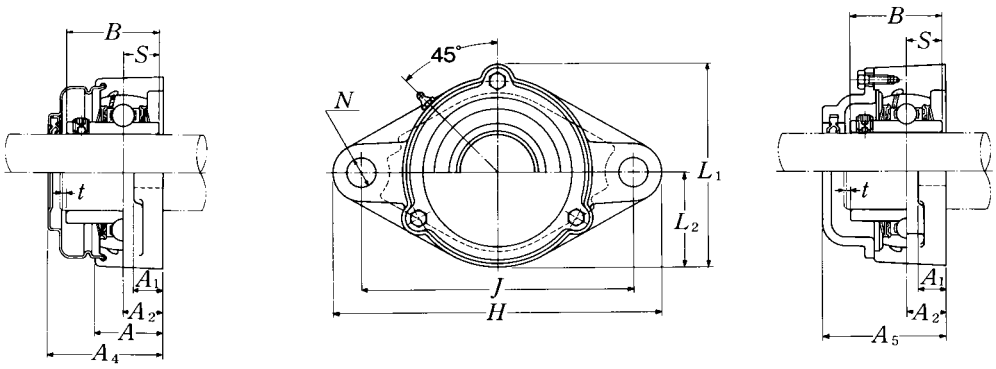


**Cast dust cover type**
Open end: **C-UCFL···D1**
Closed end: **CM-UCFL···D1**

| Housing [1] number | Unit number [1] pressed steel dust cover type | Unit number [1] cast dust cover type | Nominal dimensions | | | | | Mass of unit | | |
|---|---|---|---|---|---|---|---|---|---|---|
| | | | mm | | | inch | | kg | | lb |
| | | | $t$ max. | $A_4$ | $A_5$ | $L_1$ | $L_2$ | UCFL | S(SM) | C(CM) |
| FL210D1 | S(SM)-UCFL210D1 | C(CM)-UCFL210D1 | 3 | 65.5 | 72 | 120 | 58 | 2.0 | 2.1 | 2.7 |
| FL210D1 | S(SM)-UCFL210-113D1 | C(CM)-UCFL210-113D1 | | | | | | | | |
| FL210D1 | S(SM)-UCFL210-114D1 | C(CM)-UCFL210-114D1 | 1/8 | 2 19/32 | 2 27/32 | 4 23/32 | 2 9/32 | 4.4 | 4.6 | 6.0 |
| FL210D1 | S(SM)-UCFL210-115D1 | C(CM)-UCFL210-115D1 | | | | | | | | |
| FL210D1 | S(SM)-UCFL210-200D1 | C(CM)-UCFL210-200D1 | | | | | | | | |
| FL211D1 | S(SM)-UCFL211D1 | C(CM)-UCFL211D1 | 4 | 71 | 75 | 133 | 65 | 2.9 | 3.0 | 3.4 |
| FL211D1 | S(SM)-UCFL211-200D1 | C(CM)-UCFL211-200D1 | | | | | | | | |
| FL211D1 | S(SM)-UCFL211-201D1 | C(CM)-UCFL211-201D1 | 5/32 | 2 25/32 | 2 15/16 | 5 1/4 | 2 9/16 | 6.4 | 6.6 | 7.5 |
| FL211D1 | S(SM)-UCFL211-202D1 | C(CM)-UCFL211-202D1 | | | | | | | | |
| FL211D1 | S(SM)-UCFL211-203D1 | C(CM)-UCFL211-203D1 | | | | | | | | |
| FL212D1 | S(SM)-UCFL212D1 | C(CM)-UCFL212D1 | 4 | 80 | 86 | 144 | 70 | 3.8 | 4.0 | 4.6 |
| FL212D1 | S(SM)-UCFL212-204D1 | C(CM)-UCFL212-204D1 | | | | | | | | |
| FL212D1 | S(SM)-UCFL212-205D1 | C(CM)-UCFL212-205D1 | 5/32 | 3 5/32 | 3 3/8 | 5 21/32 | 2 3/4 | 8.4 | 8.8 | 10 |
| FL212D1 | S(SM)-UCFL212-206D1 | C(CM)-UCFL212-206D1 | | | | | | | | |
| FL212D1 | S(SM)-UCFL212-207D1 | C(CM)-UCFL212-207D1 | | | | | | | | |
| FL213D1 | S(SM)-UCFL213D1 | C(CM)-UCFL213D1 | 4 | 83.5 | 90 | 157 | 78 | 4.8 | 4.9 | 5.8 |
| FL213D1 | S(SM)-UCFL213-208D1 | C(CM)-UCFL213-208D1 | 5/32 | 3 9/32 | 3 17/32 | 6 3/16 | 3 1/16 | 11 | 11 | 15 |
| FL213D1 | S(SM)-UCFL213-209D1 | C(CM)-UCFL213-209D1 | | | | | | | | |
| FL214D1 | — | C(CM)-UCFL214D1 | 4 | — | 98 | 164 | 80 | 5.4 | — | 7.7 |
| FL214D1 | | C(CM)-UCFL214-210D1 | | | | | | | | |
| FL214D1 | — | C(CM)-UCFL214-211D1 | 5/32 | — | 3 27/32 | 6 15/32 | 3 5/32 | 12 | — | 17 |
| FL214D1 | | C(CM)-UCFL214-212D1 | | | | | | | | |
| FL215D1 | — | C(CM)-UCFL215D1 | 4 | — | 102 | 169 | 82 | 6.0 | — | 7.1 |
| FL215D1 | | C(CM)-UCFL215-213D1 | | | | | | | | |
| FL215D1 | — | C(CM)-UCFL215-214D1 | 5/32 | — | 4 1/32 | 6 21/32 | 3 7/32 | 13 | — | 16 |
| FL215D1 | | C(CM)-UCFL215-215D1 | | | | | | | | |
| FL215D1 | | C(CM)-UCFL215-300D1 | | | | | | | | |
| FL216D1 | — | C(CM)-UCFL216D1 | 4 | — | 106 | 183 | 90 | 7.4 | — | 8.6 |
| FL216D1 | | C(CM)-UCFL216-301D1 | | | | | | | | |
| FL216D1 | — | C(CM)-UCFL216-302D1 | 5/32 | — | 4 3/16 | 7 7/32 | 3 17/32 | 16 | — | 19 |
| FL216D1 | | C(CM)-UCFL216-303D1 | | | | | | | | |

## Rhombus flanged units cast housing
## Set screw type

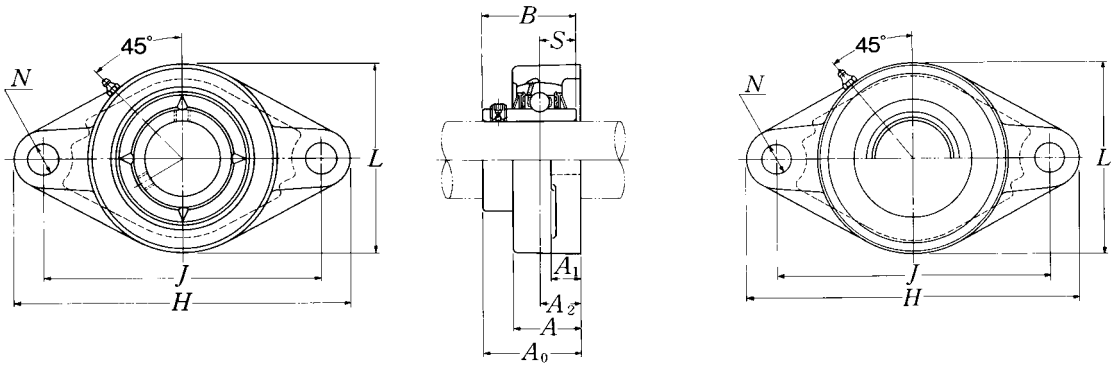


**Pressed steel dust cover type**
Open end: **S-UCFL···D1**
Closed end: **SM-UCFL···D1**

| Shaft dia. mm / inch | Unit number [1] | Nominal dimensions mm / inch H | J | A2 | A1 | A | N | L | A0 | B | S | Bolt size mm / inch | Bearing number |
|---|---|---|---|---|---|---|---|---|---|---|---|---|---|
| **85** | **UCFL217D1** | 305 | 248 | 36 | 24 | 63 | 25 | 190 | 87.6 | 85.7 | 34.1 | M22 | UC217D1 |
| **3 1/4** | **UCFL217-304D1** | | | | | | | | | | | | UC217-304D1 |
| **3 5/16** | **UCFL217-305D1** | 12 | 9 49/64 | 1 27/64 | 15/16 | 2 15/32 | 63/64 | 7 15/32 | 3 29/64 | 3.3740 | 1.343 | 7/8 | UC217-305D1 |
| **3 7/16** | **UCFL217-307D1** | | | | | | | | | | | | UC217-307D1 |
| **90** | **UCFL218D1** | 320 | 265 | 40 | 24 | 68 | 25 | 205 | 96.3 | 96 | 39.7 | M22 | UC218D1 |
| **3 1/2** | **UCFL218-308D1** | 12 19/32 | 10 7/16 | 1 37/64 | 15/16 | 2 11/16 | 63/64 | 8 1/16 | 3 51/64 | 3.7795 | 1.563 | 7/8 | UC218-308D1 |

Remarks: 1) These numbers indicate relubricatable type. If maintenance free type is needed, please order without suffix "D1".
Note: Please refer to page 36 for size of grease fitting.

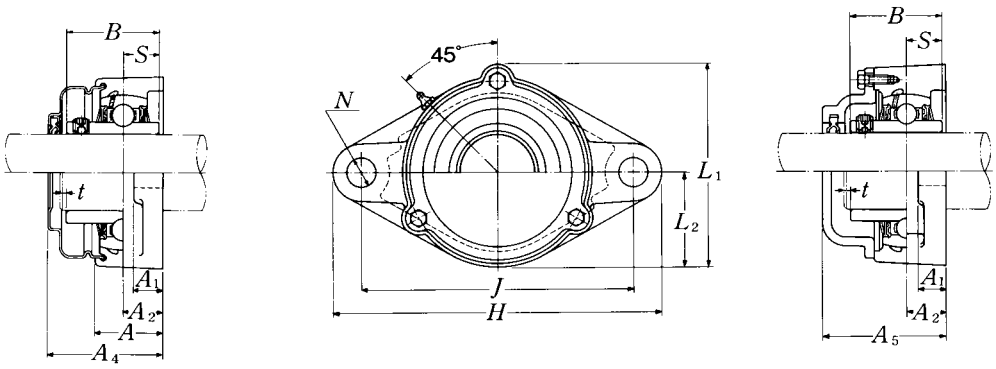


**Cast dust cover type**
Open end: **C-UCFL···D1**
Closed end: **CM-UCFL···D1**

| Housing [1] number | Unit number [1] pressed steel dust cover type | Unit number [1] cast dust cover type | Nominal dimensions | | | | | Mass of unit | | |
|---|---|---|---|---|---|---|---|---|---|---|
| | | | mm | | | inch | | kg | | lb |
| | | | $t$ max. | $A_4$ | $A_5$ | $L_1$ | $L_2$ | UCFL | S(SM) | C(CM) |
| FL217D1 | — | **C(CM)-UCFL217D1** | 5 | — | 114 | 192 | 95 | 8.8 | — | 10 |
| FL217D1 | — | **C(CM)-UCFL217-304D1** | 13/64 | — | 4 1/2 | 7 9/16 | 3 3/4 | 19 | — | 22 |
| FL217D1 | | **C(CM)-UCFL217-305D1** | | | | | | | | |
| FL217D1 | | **C(CM)-UCFL217-307D1** | | | | | | | | |
| FL218D1 | — | **C(CM)-UCFL218D1** | 5 | — | 122 | 205 | 102 | 11 | — | 13 |
| FL218D1 | — | **C(CM)-UCFL218-308D1** | 13/64 | — | 4 13/16 | 8 1/16 | 4 1/32 | 24 | — | 29 |

## Rhombus flanged units cast housing
## Set screw type

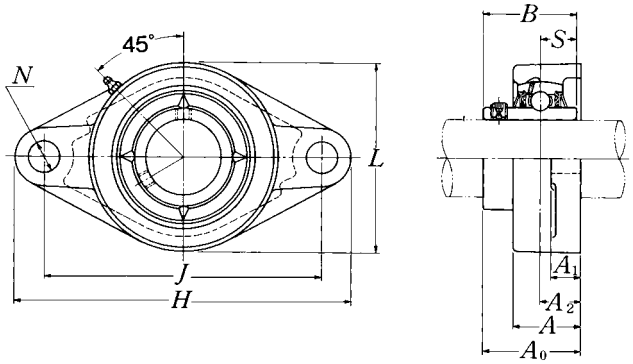


| Shaft dia. mm / inch | Unit number [1] | Nominal dimensions H | J | A2 | A1 | A (mm) | N (inch) | L | A0 | B | S | Bolt size mm / inch | Bearing number |
|---|---|---|---|---|---|---|---|---|---|---|---|---|---|
| 25 | UCFL305D1 | 150 | 113 | 16 | 13 | 29 | 19 | 80 | 39 | 38 | 15 | M16 | UC305D1 |
| 13/16 | UCFL305-013D1 | | | | | | | | | | | | UC305-013D1 |
| 7/8 | UCFL305-014D1 | 5 29/32 | 4 7/16 | 5/8 | 1/2 | 1 5/32 | 3/4 | 3 5/32 | 1 17/32 | 1.4961 | 0.591 | 5/8 | UC305-014D1 |
| 15/16 | UCFL305-015D1 | | | | | | | | | | | | UC305-015D1 |
| 1 | UCFL305-100D1 | | | | | | | | | | | | UC305-100D1 |
| 30 | UCFL306D1 | 180 | 134 | 18 | 15 | 32 | 23 | 90 | 44 | 43 | 17 | M20 | UC306D1 |
| 1 1/16 | UCFL306-101D1 | | | | | | | | | | | | UC306-101D1 |
| 1 1/8 | UCFL306-102D1 | 7 3/32 | 5 9/32 | 45/64 | 19/32 | 1 1/4 | 29/32 | 3 17/32 | 1 47/64 | 1.6929 | 0.669 | 3/4 | UC306-102D1 |
| 1 3/16 | UCFL306-103D1 | | | | | | | | | | | | UC306-103D1 |
| 35 | UCFL307D1 | 185 | 141 | 20 | 16 | 36 | 23 | 100 | 49 | 48 | 19 | M20 | UC307D1 |
| 1 1/4 | UCFL307-104D1 | | | | | | | | | | | | UC307-104D1 |
| 1 5/16 | UCFL307-105D1 | 7 9/32 | 5 35/64 | 25/32 | 5/8 | 1 13/32 | 29/32 | 3 15/16 | 1 59/64 | 1.8898 | 0.748 | 3/4 | UC307-105D1 |
| 1 3/8 | UCFL307-106D1 | | | | | | | | | | | | UC307-106D1 |
| 1 7/16 | UCFL307-107D1 | | | | | | | | | | | | UC307-107D1 |
| 40 | UCFL308D1 | 200 | 158 | 23 | 17 | 40 | 23 | 112 | 56 | 52 | 19 | M20 | UC308D1 |
| 1 1/2 | UCFL308-108D1 | 7 7/8 | 6 7/32 | 29/32 | 21/32 | 1 9/16 | 29/32 | 4 13/32 | 2 13/64 | 2.0472 | 0.748 | 3/4 | UC308-108D1 |
| 1 9/16 | UCFL308-109D1 | | | | | | | | | | | | UC308-109D1 |
| 45 | UCFL309D1 | 230 | 177 | 25 | 18 | 44 | 25 | 125 | 60 | 57 | 22 | M22 | UC309D1 |
| 1 5/8 | UCFL309-110D1 | | | | | | | | | | | | UC309-110D1 |
| 1 11/16 | UCFL309-111D1 | 9 1/16 | 6 31/32 | 63/64 | 23/32 | 1 23/32 | 63/64 | 4 29/32 | 2 23/64 | 2.2441 | 0.866 | 7/8 | UC309-111D1 |
| 1 3/4 | UCFL309-112D1 | | | | | | | | | | | | UC309-112D1 |
| 50 | UCFL310D1 | 240 | 187 | 28 | 19 | 48 | 25 | 140 | 67 | 61 | 22 | M22 | UC310D1 |
| 1 13/16 | UCFL310-113D1 | | | | | | | | | | | | UC310-113D1 |
| 1 7/8 | UCFL310-114D1 | 9 7/16 | 7 23/64 | 1 7/64 | 3/4 | 1 7/8 | 63/64 | 5 1/2 | 2 41/64 | 2.4016 | 0.866 | 7/8 | UC310-114D1 |
| 1 15/16 | UCFL310-115D1 | | | | | | | | | | | | UC310-115D1 |
| 55 | UCFL311D1 | 250 | 198 | 30 | 20 | 52 | 25 | 150 | 71 | 66 | 25 | M22 | UC311D1 |
| 2 | UCFL311-200D1 | | | | | | | | | | | | UC311-200D1 |
| 2 1/16 | UCFL311-201D1 | 9 27/32 | 7 51/64 | 1 3/16 | 25/32 | 2 1/16 | 63/64 | 5 29/32 | 2 51/64 | 2.5984 | 0.984 | 7/8 | UC311-201D1 |
| 2 1/8 | UCFL311-202D1 | | | | | | | | | | | | UC311-202D1 |
| 2 3/16 | UCFL311-203D1 | | | | | | | | | | | | UC311-203D1 |

Remarks: 1) These numbers indicate relubricatable type. If maintenance free type is needed, please order without suffix "D1".
Note: Please refer to page 36 for size of grease fitting.

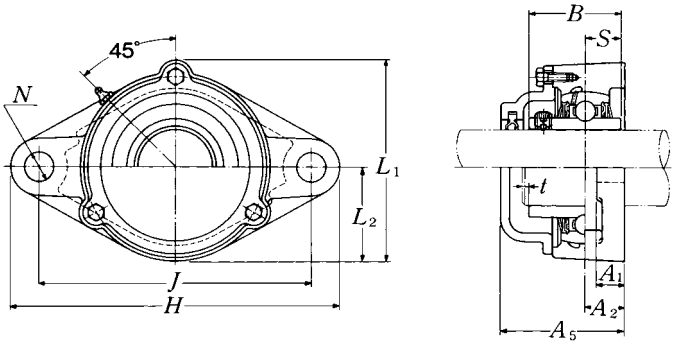


**Cast dust cover type**
Open end: **C-UCFL···D1**
Closed end: **CM-UCFL···D1**

| Housing [1] number | Unit number [1] cast dust cover type | Nominal dimensions | | | | Mass of unit | |
|---|---|---|---|---|---|---|---|
| | | mm | | inch | | kg | lb |
| | | $t$ max. | $A_5$ | $L_1$ | $L_2$ | UCFL | C(CM) |
| FL305D1 | C(CM)-UCFL305D1 | 2 | 56 | 86 | 40 | 0.9 | 1.2 |
| FL305D1 | C(CM)-UCFL305-013D1 | | | | | | |
| FL305D1 | C(CM)-UCFL305-014D1 | 5/64 | 2 7/32 | 3 3/8 | 1 9/16 | 2.0 | 2.7 |
| FL305D1 | C(CM)-UCFL305-015D1 | | | | | | |
| FL305D1 | C(CM)-UCFL305-100D1 | | | | | | |
| FL306D1 | C(CM)-UCFL306D1 | 2 | 60 | 101 | 45 | 1.4 | 1.7 |
| FL306D1 | C(CM)-UCFL306-101D1 | | | | | | |
| FL306D1 | C(CM)-UCFL306-102D1 | 5/64 | 2 3/8 | 3 31/32 | 1 25/32 | 3.1 | 3.8 |
| FL306D1 | C(CM)-UCFL306-103D1 | | | | | | |
| FL307D1 | C(CM)-UCFL307D1 | 3 | 68 | 110 | 50 | 1.7 | 2.1 |
| FL307D1 | C(CM)-UCFL307-104D1 | | | | | | |
| FL307D1 | C(CM)-UCFL307-105D1 | 1/8 | 2 11/16 | 4 11/32 | 1 31/32 | 3.8 | 4.6 |
| FL307D1 | C(CM)-UCFL307-106D1 | | | | | | |
| FL307D1 | C(CM)-UCFL307-107D1 | | | | | | |
| FL308D1 | C(CM)-UCFL308D1 | 3 | 76 | 122 | 56 | 2.2 | 2.9 |
| FL308D1 | C(CM)-UCFL308-108D1 | 1/8 | 3 | 4 13/16 | 2 7/32 | 4.9 | 6.4 |
| FL308D1 | C(CM)-UCFL308-109D1 | | | | | | |
| FL309D1 | C(CM)-UCFL309D1 | 3 | 80 | 135 | 62 | 3.0 | 3.8 |
| FL309D1 | C(CM)-UCFL309-110D1 | | | | | | |
| FL309D1 | C(CM)-UCFL309-111D1 | 1/8 | 3 5/32 | 5 5/16 | 2 7/16 | 6.6 | 8.4 |
| FL309D1 | C(CM)-UCFL309-112D1 | | | | | | |
| FL310D1 | C(CM)-UCFL310D1 | 3 | 88 | 152 | 70 | 4.1 | 5.0 |
| FL310D1 | C(CM)-UCFL310-113D1 | | | | | | |
| FL310D1 | C(CM)-UCFL310-114D1 | 1/8 | 3 15/32 | 5 31/32 | 2 3/4 | 9.0 | 11 |
| FL310D1 | C(CM)-UCFL310-115D1 | | | | | | |
| FL311D1 | C(CM)-UCFL311D1 | 4 | 92 | 162 | 75 | 4.6 | 5.9 |
| FL311D1 | C(CM)-UCFL311-200D1 | | | | | | |
| FL311D1 | C(CM)-UCFL311-201D1 | 5/32 | 3 5/8 | 6 3/8 | 2 15/16 | 10 | 13 |
| FL311D1 | C(CM)-UCFL311-202D1 | | | | | | |
| FL311D1 | C(CM)-UCFL311-203D1 | | | | | | |

## Rhombus flanged units cast housing
## Set screw type

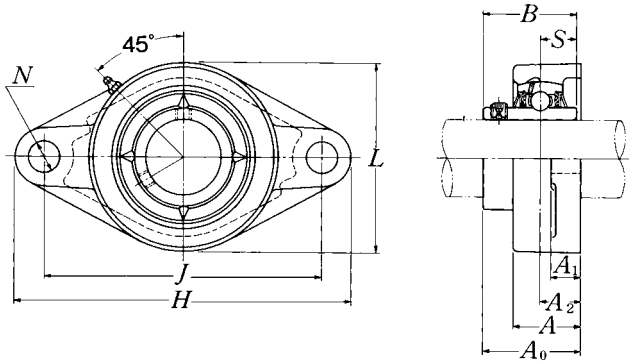


| Shaft dia. mm / inch | Unit number [1] | Nominal dimensions mm / inch H | J | A2 | A1 | A | N | L | A0 | B | S | Bolt size mm / inch | Bearing number |
|---|---|---|---|---|---|---|---|---|---|---|---|---|---|
| 60 | UCFL312D1 | 270 | 212 | 33 | 22 | 56 | 31 | 160 | 78 | 71 | 26 | M27 | UC312D1 |
| 2 1/4 | UCFL312-204D1 | | | | | | | | | | | | UC312-204D1 |
| 2 5/16 | UCFL312-205D1 | 10 5/8 | 8 11/32 | 1 19/64 | 7/8 | 2 7/32 | 1 7/32 | 6 5/16 | 3 5/64 | 2.7953 | 1.024 | 1 | UC312-205D1 |
| 2 3/8 | UCFL312-206D1 | | | | | | | | | | | | UC312-206D1 |
| 2 7/16 | UCFL312-207D1 | | | | | | | | | | | | UC312-207D1 |
| 65 | UCFL313D1 | 295 | 240 | 33 | 25 | 58 | 31 | 175 | 78 | 75 | 30 | M27 | UC313D1 |
| 2 1/2 | UCFL313-208D1 | 11 5/8 | 9 29/64 | 1 19/64 | 31/32 | 2 9/32 | 1 7/32 | 6 7/8 | 3 5/64 | 2.9528 | 1.181 | 1 | UC313-208D1 |
| 2 9/16 | UCFL313-209D1 | | | | | | | | | | | | UC313-209D1 |
| 70 | UCFL314D1 | 315 | 250 | 36 | 28 | 61 | 35 | 185 | 81 | 78 | 33 | M30 | UC314D1 |
| 2 5/8 | UCFL314-210D1 | | | | | | | | | | | | UC314-210D1 |
| 2 11/16 | UCFL314-211D1 | 12 13/32 | 9 27/32 | 1 27/64 | 1 3/32 | 2 13/32 | 1 3/8 | 7 9/32 | 3 3/16 | 3.0709 | 1.299 | 1 1/8 | UC314-211D1 |
| 2 3/4 | UCFL314-212D1 | | | | | | | | | | | | UC314-212D1 |
| 75 | UCFL315D1 | 320 | 260 | 39 | 30 | 66 | 35 | 195 | 89 | 82 | 32 | M30 | UC315D1 |
| 2 13/16 | UCFL315-213D1 | | | | | | | | | | | | UC315-213D1 |
| 2 7/8 | UCFL315-214D1 | 12 19/32 | 10 15/64 | 1 17/32 | 1 3/16 | 2 19/32 | 1 3/8 | 7 11/16 | 3 1/2 | 3.2283 | 1.260 | 1 1/8 | UC315-214D1 |
| 2 15/16 | UCFL315-215D1 | | | | | | | | | | | | UC315-215D1 |
| 3 | UCFL315-300D1 | | | | | | | | | | | | UC315-300D1 |
| 80 | UCFL316D1 | 355 | 285 | 38 | 32 | 68 | 38 | 210 | 90 | 86 | 34 | M33 | UC316D1 |
| 3 1/16 | UCFL316-301D1 | | | | | | | | | | | | UC316-301D1 |
| 3 1/8 | UCFL316-302D1 | 13 31/32 | 11 7/32 | 1 1/2 | 1 1/4 | 2 11/16 | 1 1/2 | 8 9/32 | 3 35/64 | 3.3858 | 1.339 | 1 1/4 | UC316-302D1 |
| 3 3/16 | UCFL316-303D1 | | | | | | | | | | | | UC316-303D1 |
| 85 | UCFL317D1 | 370 | 300 | 44 | 32 | 74 | 38 | 220 | 100 | 96 | 40 | M33 | UC317D1 |
| 3 1/4 | UCFL317-304D1 | | | | | | | | | | | | UC317-304D1 |
| 3 5/16 | UCFL317-305D1 | 14 9/16 | 11 13/16 | 1 47/64 | 1 1/4 | 2 29/32 | 1 1/2 | 8 21/32 | 3 15/16 | 3.7795 | 1.575 | 1 1/4 | UC317-305D1 |
| 3 7/16 | UCFL317-307D1 | | | | | | | | | | | | UC317-307D1 |
| 90 | UCFL318D1 | 385 | 315 | 44 | 36 | 76 | 38 | 235 | 100 | 96 | 40 | M33 | UC318D1 |
| 3 7/16 | UCFL318-307D1 | 15 5/32 | 12 13/32 | 1 47/64 | 1 13/32 | 3 | 1 1/2 | 9 1/4 | 3 15/16 | 3.7795 | 1.575 | 1 1/4 | UC318-307D1 |
| 3 1/2 | UCFL318-308D1 | | | | | | | | | | | | UC318-308D1 |

Remarks: 1) These numbers indicate relubricatable type. If maintenance free type is needed, please order without suffix "D1".
Note: Please refer to page 36 for size of grease fitting.

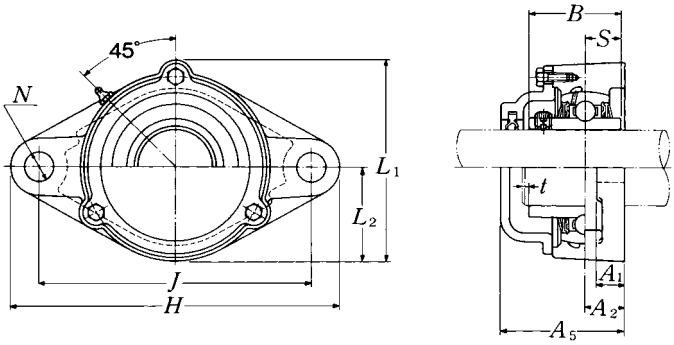


**Cast dust cover type**
Open end: **C-UCFL···D1**
Closed end: **CM-UCFL···D1**

| Housing [1] number | Unit number [1] cast dust cover type | Nominal dimensions | | | | Mass of unit | |
|---|---|---|---|---|---|---|---|
| | | mm | | inch | | kg | lb |
| | | $t$ max. | $A_5$ | $L_1$ | $L_2$ | UCFL | C(CM) |
| FL312D1 | C(CM)-UCFL312D1 | 4 | 100 | 175 | 80 | 5.7 | 7.7 |
| FL312D1 | C(CM)-UCFL312-204D1 | | | | | | |
| FL312D1 | C(CM)-UCFL312-205D1 | 5/32 | 3 15/16 | 6 7/8 | 3 5/32 | 13 | 17 |
| FL312D1 | C(CM)-UCFL312-206D1 | | | | | | |
| FL312D1 | C(CM)-UCFL312-207D1 | | | | | | |
| FL313D1 | C(CM)-UCFL313D1 | 4 | 103 | 189 | 88 | 7.6 | 9.9 |
| FL313D1 | C(CM)-UCFL313-208D1 | 5/32 | 4 1/16 | 7 7/16 | 3 15/32 | 17 | 22 |
| FL313D1 | C(CM)-UCFL313-209D1 | | | | | | |
| FL314D1 | C(CM)-UCFL314D1 | 4 | 106 | 198 | 92 | 8.6 | 11 |
| FL314D1 | C(CM)-UCFL314-210D1 | | | | | | |
| FL314D1 | C(CM)-UCFL314-211D1 | 5/32 | 4 3/16 | 7 25/32 | 3 5/8 | 19 | 24 |
| FL314D1 | C(CM)-UCFL314-212D1 | | | | | | |
| FL315D1 | C(CM)-UCFL315D1 | 4 | 114 | 210 | 98 | 9.9 | 12 |
| FL315D1 | C(CM)-UCFL315-213D1 | | | | | | |
| FL315D1 | C(CM)-UCFL315-214D1 | 5/32 | 4 1/2 | 8 9/32 | 3 27/32 | 22 | 26 |
| FL315D1 | C(CM)-UCFL315-215D1 | | | | | | |
| FL315D1 | C(CM)-UCFL315-300D1 | | | | | | |
| FL316D1 | C(CM)-UCFL316D1 | 4 | 116 | 222 | 105 | 13 | 16 |
| FL316D1 | C(CM)-UCFL316-301D1 | | | | | | |
| FL316D1 | C(CM)-UCFL316-302D1 | 5/32 | 4 9/16 | 8 3/4 | 4 1/8 | 29 | 35 |
| FL316D1 | C(CM)-UCFL316-303D1 | | | | | | |
| FL317D1 | C(CM)-UCFL317D1 | 5 | 127 | 234 | 110 | 15 | 18 |
| FL317D1 | C(CM)-UCFL317-304D1 | | | | | | |
| FL317D1 | C(CM)-UCFL317-305D1 | 13/64 | 5 | 9 7/32 | 4 11/32 | 33 | 40 |
| FL317D1 | C(CM)-UCFL317-307D1 | | | | | | |
| FL318D1 | C(CM)-UCFL318D1 | 5 | 129 | 247 | 118 | 17 | 21 |
| FL318D1 | C(CM)-UCFL318-307D1 | 13/64 | 5 3/32 | 9 23/32 | 4 21/32 | 37 | 46 |
| FL318D1 | C(CM)-UCFL318-308D1 | | | | | | |

## Rhombus flanged units cast housing
## Set screw type

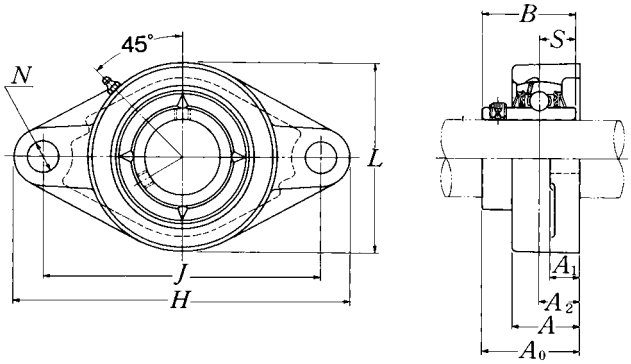


| Shaft dia. mm / inch | Unit number [1] | Nominal dimensions | | | | | | | | | | Bolt size mm / inch | Bearing number |
|---|---|---|---|---|---|---|---|---|---|---|---|---|---|
| | | | | | | mm | | inch | | | | | |
| | | $H$ | $J$ | $A_2$ | $A_1$ | $A$ | $N$ | $L$ | $A_0$ | $B$ | $S$ | | |
| **95** | **UCFL319D1** | 405 | 330 | 59 | 40 | 94 | 41 | 250 | 121 | 103 | 41 | M36 | UC319D1 |
| **3 5/8** | **UCFL319-310D1** | | | | | | | | | | | | UC319-310D1 |
| **3 11/16** | **UCFL319-311D1** | 15 15/16 | 12 63/64 | 2 21/64 | 1 9/16 | 3 11/16 | 1 39/64 | 9 27/32 | 4 49/64 | 4.0551 | 1.614 | 1 3/8 | UC319-311D1 |
| **3 3/4** | **UCFL319-312D1** | | | | | | | | | | | | UC319-312D1 |
| **100** | **UCFL320D1** | 440 | 360 | 59 | 40 | 94 | 44 | 270 | 125 | 108 | 42 | M39 | UC320D1 |
| **3 13/16** | **UCFL320-313D1** | | | | | | | | | | | | UC320-313D1 |
| **3 7/8** | **UCFL320-314D1** | 17 5/16 | 14 11/64 | 2 21/64 | 1 9/16 | 3 11/16 | 1 47/64 | 10 5/8 | 4 59/64 | 4.2520 | 1.654 | 1 1/2 | UC320-314D1 |
| **3 15/16** | **UCFL320-315D1** | | | | | | | | | | | | UC320-315D1 |
| **4** | **UCFL320-400D1** | | | | | | | | | | | | UC320-400D1 |
| **105** | **UCFL321D1** | 440 | 360 | 59 | 40 | 94 | 44 | 270 | 127 | 112 | 44 | M39 | UC321D1 |
| **110** | **UCFL322D1** | 470 | 390 | 60 | 42 | 96 | 44 | 300 | 131 | 117 | 46 | M39 | UC322D1 |
| **120** | **UCFL324D1** | 520 | 430 | 65 | 48 | 110 | 47 | 330 | 140 | 126 | 51 | M42 | UC324D1 |
| **130** | **UCFL326D1** | 550 | 460 | 65 | 50 | 115 | 47 | 360 | 146 | 135 | 54 | M42 | UC326D1 |
| **140** | **UCFL328D1** | 600 | 500 | 75 | 60 | 125 | 51 | 400 | 161 | 145 | 59 | M45 | UC328D1 |

Remarks: 1) These numbers indicate relubricatable type. If maintenance free type is needed, please order without suffix "D1".
Note: Please refer to page 36 for size of grease fitting.

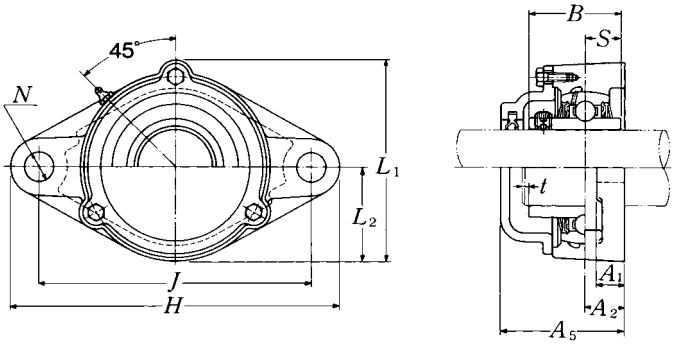


**Cast dust cover type**
Open end: **C-UCFL···D1**
Closed end: **CM-UCFL···D1**

| Housing [1] number | Unit number [1] cast dust cover type | Nominal dimensions | | | | Mass of unit | |
|---|---|---|---|---|---|---|---|
| | | mm | | inch | | kg | lb |
| | | $t$ max. | $A_5$ | $L_1$ | $L_2$ | UCFL | C(CM) |
| FL319D1 | C(CM)-UCFL319D1 | 5 | 149 | 260 | 125 | 22 | 26 |
| FL319D1 | C(CM)-UCFL319-310D1 | | | | | | |
| FL319D1 | C(CM)-UCFL319-311D1 | 13/64 | 5 7/8 | 10 1/4 | 4 29/32 | 49 | 57 |
| FL319D1 | C(CM)-UCFL319-312D1 | | | | | | |
| FL320D1 | C(CM)-UCFL320D1 | 5 | 154 | 280 | 135 | 26 | 31 |
| FL320D1 | C(CM)-UCFL320-313D1 | | | | | | |
| FL320D1 | C(CM)-UCFL320-314D1 | 13/64 | 6 1/16 | 11 1/32 | 5 5/16 | 57 | 68 |
| FL320D1 | C(CM)-UCFL320-315D1 | | | | | | |
| FL320D1 | C(CM)-UCFL320-400D1 | | | | | | |
| FL321D1 | C(CM)-UCFL321D1 | 5 | 156 | 287 | 135 | 27 | 32 |
| FL322D1 | C(CM)-UCFL322D1 | 5 | 160 | 315 | 150 | 34 | 39 |
| FL324D1 | C(CM)-UCFL324D1 | 5 | 172 | 342 | 165 | 48 | 52 |
| FL326D1 | C(CM)-UCFL326D1 | 6 | 178 | 376 | 180 | 58 | 64 |
| FL328D1 | C(CM)-UCFL328D1 | 6 | 192 | 410 | 200 | 81 | 90 |

## Rhombus flanged units cast housing
## Set screw type

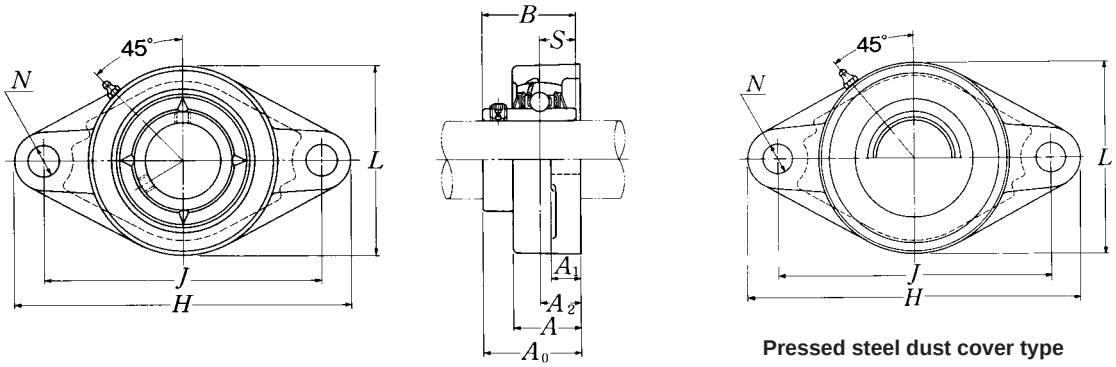


**Pressed steel dust cover type**
Open end: **S-UCFLX···D1**
Closed end: **SM-UCFLX···D1**

| Shaft dia. mm / inch | Unit number [1] | Nominal dimensions H | J | A2 | A1 | A (mm) | N | L (inch) | A0 | B | S | Bolt size mm / inch | Bearing number |
|---|---|---|---|---|---|---|---|---|---|---|---|---|---|
| **25** | **UCFLX05D1** | 141 | 117 | 18 | 13 | 30 | 12 | 83 | 40.2 | 38.1 | 15.9 | M10 | UCX05D1 |
| 13/16 | **UCFLX05-013D1** | | | | | | | | | | | | UCX05-013D1 |
| 7/8 | **UCFLX05-014D1** | 5 9/16 | 4 39/64 | 45/64 | 1/2 | 1 3/16 | 15/32 | 3 9/32 | 1 37/64 | 1.5000 | 0.626 | 3/8 | UCX05-014D1 |
| 15/16 | **UCFLX05-015D1** | | | | | | | | | | | | UCX05-015D1 |
| **1** | **UCFLX05-100D1** | | | | | | | | | | | | UCX05-100D1 |
| **30** | **UCFLX06D1** | 156 | 130 | 19 | 15 | 34 | 16 | 95 | 44.4 | 42.9 | 17.5 | M14 | UCX06D1 |
| 1 1/16 | **UCFLX06-101D1** | | | | | | | | | | | | UCX06-101D1 |
| 1 1/8 | **UCFLX06-102D1** | 6 5/32 | 5 1/8 | 3/4 | 19/32 | 1 11/32 | 5/8 | 3 3/4 | 1 3/4 | 1.6890 | 0.689 | 1/2 | UCX06-102D1 |
| 1 3/16 | **UCFLX06-103D1** | | | | | | | | | | | | UCX06-103D1 |
| 1 1/4 | **UCFLX06-104D1** | | | | | | | | | | | | UC207-104D1 |
| **35** | **UCFLX07D1** | 171 | 144 | 21 | 16 | 38 | 16 | 105 | 51.2 | 49.2 | 19 | M14 | UCX07D1 |
| 1 5/16 | **UCFLX07-105D1** | | | | | | | | | | | | UCX07-105D1 |
| 1 3/8 | **UCFLX07-106D1** | 6 23/32 | 5 43/64 | 53/64 | 5/8 | 1 1/2 | 5/8 | 4 1/8 | 2 1/64 | 1.9370 | 0.748 | 1/2 | UCX07-106D1 |
| 1 7/16 | **UCFLX07-107D1** | | | | | | | | | | | | UCX07-107D1 |
| **40** | **UCFLX08D1** | 179 | 148 | 22 | 16 | 40 | 16 | 111 | 52.2 | 49.2 | 19 | M14 | UCX08D1 |
| 1 1/2 | **UCFLX08-108D1** | 7 1/16 | 5 53/64 | 55/64 | 5/8 | 1 9/16 | 5/8 | 4 3/8 | 2 1/16 | 1.9370 | 0.748 | 1/2 | UCX08-108D1 |
| 1 9/16 | **UCFLX08-109D1** | | | | | | | | | | | | UCX08-109D1 |
| **45** | **UCFLX09D1** | 189 | 157 | 23 | 16 | 40 | 16 | 116 | 55.6 | 51.6 | 19 | M14 | UCX09D1 |
| 1 5/8 | **UCFLX09-110D1** | | | | | | | | | | | | UCX09-110D1 |
| 1 11/16 | **UCFLX09-111D1** | 7 7/16 | 6 3/16 | 29/32 | 5/8 | 1 9/16 | 5/8 | 4 9/16 | 2 3/16 | 2.0315 | 0.748 | 1/2 | UCX09-111D1 |
| 1 3/4 | **UCFLX09-112D1** | | | | | | | | | | | | UCX09-112D1 |
| 1 13/16 | **UCFLX09-113D1** | | | | | | | | | | | | UC210-113D1 |
| **50** | **UCFLX10D1** | 216 | 184 | 26 | 18 | 44 | 19 | 133 | 59.4 | 55.6 | 22.2 | M16 | UCX10D1 |
| 1 7/8 | **UCFLX10-114D1** | | | | | | | | | | | | UCX10-114D1 |
| 1 15/16 | **UCFLX10-115D1** | 8 1/2 | 7 1/4 | 1 1/32 | 23/32 | 1 23/32 | 3/4 | 5 1/4 | 2 11/32 | 2.1890 | 0.874 | 5/8 | UCX10-115D1 |
| **2** | **UCFLX10-200D1** | | | | | | | | | | | | UC211-200D1 |

Remarks: 1) These numbers indicate relubricatable type. If maintenance free type is needed, please order without suffix "D1".
Note: Please refer to page 36 for size of grease fitting.

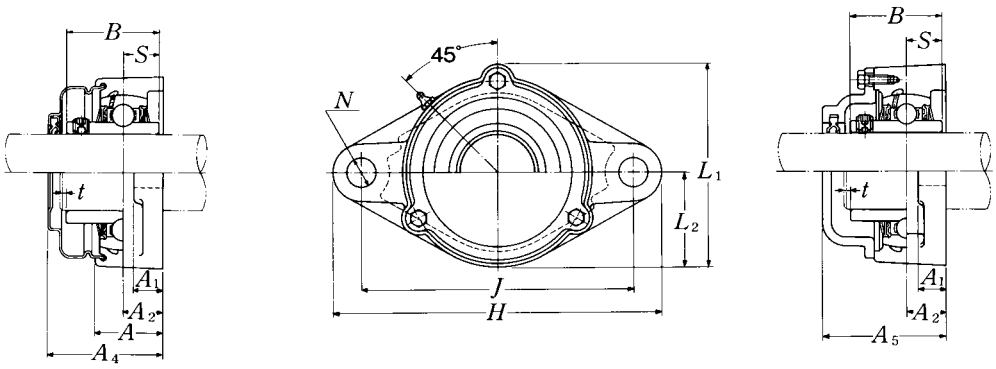


**Cast dust cover type**
Open end: **C-UCFLX···D1**
Closed end: **CM-UCFLX···D1**

| Housing [1] number | Unit number [1] pressed steel dust cover type | Unit number [1] cast dust cover type | Nominal dimensions | | | | | Mass of unit | | |
|---|---|---|---|---|---|---|---|---|---|---|
| | | | mm | | | inch | | kg | | lb |
| | | | $t$ max. | $A_4$ | $A_5$ | $L_1$ | $L_2$ | UCFLX | S(SM) | C(CM) |
| FLX05D1 | S(SM)-UCFLX05D1 | C(CM)-UCFLX05D1 | 2 | 49 | 56 | 86 | 41.5 | 1.0 | 1.0 | 1.2 |
| FLX05D1 | S(SM)-UCFLX05-013D1 | C(CM)-UCFLX05-013D1 | | | | | | | | |
| FLX05D1 | S(SM)-UCFLX05-014D1 | C(CM)-UCFLX05-014D1 | 5/64 | 1 15/16 | 2 7/32 | 3 3/8 | 1 5/8 | 2.2 | 2.2 | 2.7 |
| FLX05D1 | S(SM)-UCFLX05-015D1 | C(CM)-UCFLX05-015D1 | | | | | | | | |
| FLX05D1 | S(SM)-UCFLX05-100D1 | C(CM)-UCFLX05-100D1 | | | | | | | | |
| FLX06D1 | S(SM)-UCFLX06D1 | C(CM)-UCFLX06D1 | 2 | 55 | 59 | 98.5 | 47.5 | 1.5 | 1.6 | 1.8 |
| FLX06D1 | S(SM)-UCFLX06-101D1 | C(CM)-UCFLX06-101D1 | | | | | | | | |
| FLX06D1 | S(SM)-UCFLX06-102D1 | C(CM)-UCFLX06-102D1 | 5/64 | 2 5/32 | 2 5/16 | 3 7/8 | 1 7/8 | 3.3 | 3.5 | 4.0 |
| FLX06D1 | S(SM)-UCFLX06-103D1 | C(CM)-UCFLX06-103D1 | | | | | | | | |
| FLX06D1 | S(SM)-UCFLX06-104D1 | C(CM)-UCFLX06-104D1 | | | | | | | | |
| FLX07D1 | S(SM)-UCFLX07D1 | C(CM)-UCFLX07D1 | 3 | 62 | 66 | 108.5 | 52.5 | 1.8 | 1.9 | 2.2 |
| FLX07D1 | S(SM)-UCFLX07-105D1 | C(CM)-UCFLX07-105D1 | | | | | | | | |
| FLX07D1 | S(SM)-UCFLX07-106D1 | C(CM)-UCFLX07-106D1 | 1/8 | 2 7/16 | 2 19/32 | 4 9/32 | 2 1/16 | 4.0 | 4.2 | 4.9 |
| FLX07D1 | S(SM)-UCFLX07-107D1 | C(CM)-UCFLX07-107D1 | | | | | | | | |
| FLX08D1 | S(SM)-UCFLX08D1 | C(CM)-UCFLX08D1 | 3 | 63 | 70 | 114.5 | 55.5 | 2.0 | 2.1 | 2.4 |
| FLX08D1 | S(SM)-UCFLX08-108D1 | C(CM)-UCFLX08-108D1 | 1/8 | 2 15/32 | 2 3/4 | 4 1/2 | 2 3/16 | 4.4 | 4.6 | 5.3 |
| FLX08D1 | S(SM)-UCFLX08-109D1 | C(CM)-UCFLX08-109D1 | | | | | | | | |
| FLX09D1 | S(SM)-UCFLX09D1 | C(CM)-UCFLX09D1 | 3 | 65.5 | 73 | 119.5 | 58 | 2.2 | 2.3 | 2.7 |
| FLX09D1 | S(SM)-UCFLX09-110D1 | C(CM)-UCFLX09-110D1 | | | | | | | | |
| FLX09D1 | S(SM)-UCFLX09-111D1 | C(CM)-UCFLX09-111D1 | 1/8 | 2 19/32 | 2 7/8 | 4 23/32 | 2 9/32 | 4.9 | 5.1 | 6.0 |
| FLX09D1 | S(SM)-UCFLX09-112D1 | C(CM)-UCFLX09-112D1 | | | | | | | | |
| FLX09D1 | S(SM)-UCFLX09-113D1 | C(CM)-UCFLX09-113D1 | | | | | | | | |
| FLX10D1 | S(SM)-UCFLX10D1 | C(CM)-UCFLX10D1 | 3 | 71 | 76 | 133.5 | 66.5 | 3.0 | 3.2 | 3.6 |
| FLX10D1 | S(SM)-UCFLX10-114D1 | C(CM)-UCFLX10-114D1 | | | | | | | | |
| FLX10D1 | S(SM)-UCFLX10-115D1 | C(CM)-UCFLX10-115D1 | 1/8 | 2 25/32 | 3 | 5 1/4 | 2 5/8 | 6.6 | 7.1 | 7.9 |
| FLX10D1 | S(SM)-UCFLX10-200D1 | C(CM)-UCFLX10-200D1 | | | | | | | | |

## Rhombus flanged units (Steel series)
## Set screw type

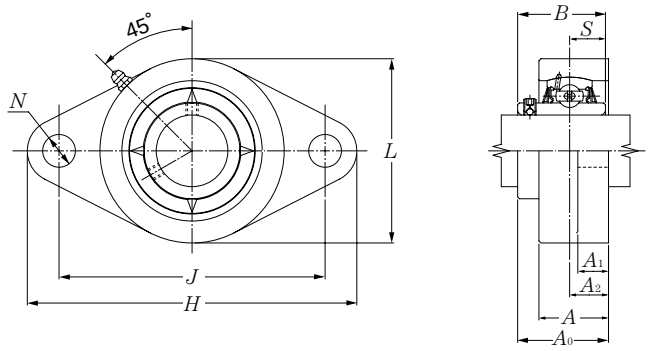


| Shaft dia. mm | Unit number 1) | Nominal dimensions mm | | | | | | | | | | Bolt size mm | Bearing number |
|---|---|---|---|---|---|---|---|---|---|---|---|---|---|
| | | $H$ | $J$ | $A_2$ | $A_1$ | $A$ | $N$ | $L$ | $A_0$ | $B$ | $S$ | | |
| **12** | **UCFLG201D1** | 113 | 90 | 15 | 11 | 25.5 | 12 | 60 | 33.3 | 31 | 12.7 | M10 | UC201D1 |
| **15** | **UCFLG202D1** | 113 | 90 | 15 | 11 | 25.5 | 12 | 60 | 33.3 | 31 | 12.7 | M10 | UC202D1 |
| **17** | **UCFLG203D1** | 113 | 90 | 15 | 11 | 25.5 | 12 | 60 | 33.3 | 31 | 12.7 | M10 | UC203D1 |
| **20** | **UCFLG204D1** | 113 | 90 | 15 | 11 | 25.5 | 12 | 60 | 33.3 | 31 | 12.7 | M10 | UC204D1 |
| **25** | **UCFLG205D1** | 130 | 99 | 16 | 13 | 27 | 16 | 68 | 35.8 | 34.1 | 14.3 | M14 | UC205D1 |
| **30** | **UCFLG206D1** | 148 | 117 | 18 | 13 | 31 | 16 | 80 | 40.2 | 38.1 | 15.9 | M14 | UC206D1 |
| **35** | **UCFLG207D1** | 161 | 130 | 19 | 15 | 34 | 16 | 90 | 44.4 | 42.9 | 17.5 | M14 | UC207D1 |
| **40** | **UCFLG208D1** | 175 | 144 | 21 | 15 | 36 | 16 | 100 | 51.2 | 49.2 | 19 | M14 | UC208D1 |
| **45** | **UCFLG209D1** | 188 | 148 | 22 | 16 | 38 | 19 | 108 | 52.2 | 49.2 | 19 | M16 | UC209D1 |
| **50** | **UCFLG210D1** | 197 | 157 | 22 | 16 | 40 | 19 | 115 | 54.6 | 51.6 | 19 | M16 | UC210D1 |
| **55** | **UCFLG211D1** | 224 | 184 | 25 | 18 | 43 | 19 | 130 | 58.4 | 55.6 | 22.2 | M16 | UC211D1 |
| **60** | **UCFLG212D1** | 250 | 202 | 29 | 18 | 48 | 23 | 140 | 68.7 | 65.1 | 25.4 | M20 | UC212D1 |
| **65** | **UCFLG213D1** | 258 | 210 | 30 | 22 | 50 | 23 | 155 | 69.7 | 65.1 | 25.4 | M20 | UC213D1 |
| **70** | **UCFLG214D1** | 265 | 216 | 31 | 22 | 54 | 23 | 160 | 75.4 | 74.6 | 30.2 | M20 | UC214D1 |
| **75** | **UCFLG215D1** | 275 | 225 | 34 | 22 | 56 | 23 | 165 | 78.5 | 77.8 | 33.3 | M20 | UC215D1 |
| **80** | **UCFLG216D1** | 290 | 233 | 34 | 22 | 58 | 25 | 180 | 83.3 | 82.6 | 33.3 | M22 | UC216D1 |
| **85** | **UCFLG217D1** | 305 | 248 | 36 | 24 | 63 | 25 | 190 | 87.6 | 85.7 | 34.1 | M22 | UC217D1 |
| **90** | **UCFLG218D1** | 320 | 265 | 40 | 24 | 68 | 25 | 205 | 96.3 | 96 | 39.7 | M22 | UC218D1 |

Remarks: 1) These numbers indicate relubricatable type. If maintenance free type is needed, please order without suffix "D1".
Note: Please refer to page 36 for size of grease fitting.

| Housing [1)] number | Mass of unit kg |
|---|---|
| FLG204D1 | 0.5 |
| FLG204D1 | 0.5 |
| FLG204D1 | 0.5 |
| FLG204D1 | 0.5 |
| FLG205D1 | 0.7 |
| FLG206D1 | 1.1 |
| FLG207D1 | 1.4 |
| FLG208D1 | 1.8 |
| FLG209D1 | 2.4 |
| FLG210D1 | 2.6 |
| FLG211D1 | 3.6 |
| FLG212D1 | 4.7 |
| FLG213D1 | 6.0 |
| FLG214D1 | 6.6 |
| FLG215D1 | 7.2 |
| FLG216D1 | 8.8 |
| FLG217D1 | 11 |
| FLG218D1 | 13 |

## Rhombus flanged units (Steel series)
## Set screw type

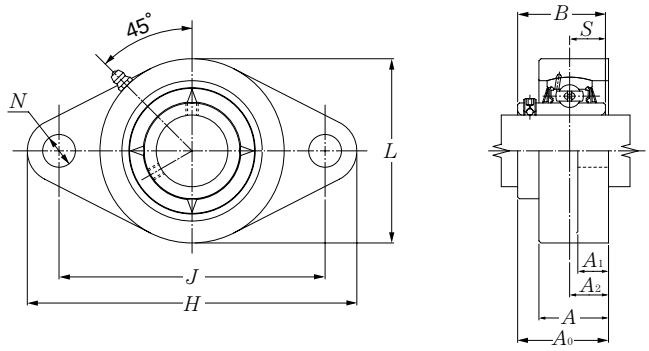


| Shaft dia. mm | Unit number [1] | Nominal dimensions mm | | | | | | | | | | Bolt size mm | Bearing number |
|---|---|---|---|---|---|---|---|---|---|---|---|---|---|
| | | $H$ | $J$ | $A_2$ | $A_1$ | $A$ | $N$ | $L$ | $A_0$ | $B$ | $S$ | | |
| **25** | **UCFLG305D1** | 150 | 113 | 16 | 13 | 29 | 19 | 80 | 39 | 38 | 15 | M16 | UC305D1 |
| **30** | **UCFLG306D1** | 180 | 134 | 18 | 15 | 32 | 23 | 90 | 44 | 43 | 17 | M20 | UC306D1 |
| **35** | **UCFLG307D1** | 185 | 141 | 20 | 16 | 36 | 23 | 100 | 49 | 48 | 19 | M20 | UC307D1 |
| **40** | **UCFLG308D1** | 200 | 158 | 23 | 17 | 40 | 23 | 112 | 56 | 52 | 19 | M20 | UC308D1 |
| **45** | **UCFLG309D1** | 230 | 177 | 25 | 18 | 44 | 25 | 125 | 60 | 57 | 22 | M22 | UC309D1 |
| **50** | **UCFLG310D1** | 240 | 187 | 28 | 19 | 48 | 25 | 140 | 67 | 61 | 22 | M22 | UC310D1 |
| **55** | **UCFLG311D1** | 250 | 198 | 30 | 20 | 52 | 25 | 150 | 71 | 66 | 25 | M22 | UC311D1 |
| **60** | **UCFLG312D1** | 270 | 212 | 33 | 22 | 56 | 31 | 160 | 78 | 71 | 26 | M27 | UC312D1 |
| **65** | **UCFLG313D1** | 295 | 240 | 33 | 25 | 58 | 31 | 175 | 78 | 75 | 30 | M27 | UC313D1 |
| **70** | **UCFLG314D1** | 315 | 250 | 36 | 28 | 61 | 35 | 185 | 81 | 78 | 33 | M30 | UC314D1 |
| **75** | **UCFLG315D1** | 320 | 260 | 39 | 30 | 66 | 35 | 195 | 89 | 82 | 32 | M30 | UC315D1 |
| **80** | **UCFLG316D1** | 355 | 285 | 38 | 32 | 68 | 38 | 210 | 90 | 86 | 34 | M33 | UC316D1 |
| **85** | **UCFLG317D1** | 370 | 300 | 44 | 32 | 74 | 38 | 220 | 100 | 96 | 40 | M33 | UC317D1 |
| **90** | **UCFLG318D1** | 385 | 315 | 44 | 36 | 76 | 38 | 235 | 100 | 96 | 40 | M33 | UC318D1 |
| **95** | **UCFLG319D1** | 405 | 330 | 59 | 40 | 94 | 41 | 250 | 121 | 103 | 41 | M36 | UC319D1 |
| **100** | **UCFLG320D1** | 440 | 360 | 59 | 40 | 94 | 44 | 270 | 125 | 108 | 42 | M39 | UC320D1 |
| **105** | **UCFLG321D1** | 440 | 360 | 59 | 40 | 94 | 44 | 270 | 127 | 112 | 44 | M39 | UC321D1 |
| **110** | **UCFLG322D1** | 470 | 390 | 60 | 42 | 96 | 44 | 300 | 131 | 117 | 46 | M39 | UC322D1 |
| **120** | **UCFLG324D1** | 520 | 430 | 65 | 48 | 110 | 47 | 330 | 140 | 126 | 51 | M42 | UC324D1 |
| **130** | **UCFLG326D1** | 550 | 460 | 65 | 50 | 115 | 47 | 360 | 146 | 135 | 54 | M42 | UC326D1 |
| **140** | **UCFLG328D1** | 600 | 500 | 75 | 60 | 125 | 51 | 400 | 161 | 145 | 59 | M45 | UC328D1 |

Remarks: 1) These numbers indicate relubricatable type. If maintenance free type is needed, please order without suffix "D1".
Note: Please refer to page 36 for size of grease fitting.

| Housing [1)] number | Mass of unit kg |
|---|---|
| FLG305D1 | 1.1 |
| FLG306D1 | 1.6 |
| FLG307D1 | 2.0 |
| FLG308D1 | 2.6 |
| FLG309D1 | 3.7 |
| FLG310D1 | 4.8 |
| FLG311D1 | 5.7 |
| FLG312D1 | 6.9 |
| FLG313D1 | 8.9 |
| FLG314D1 | 11 |
| FLG315D1 | 12 |
| FLG316D1 | 15 |
| FLG317D1 | 17 |
| FLG318D1 | 21 |
| FLG319D1 | 27 |
| FLG320D1 | 32 |
| FLG321D1 | 31 |
| FLG322D1 | 40 |
| FLG324D1 | 56 |
| FLG326D1 | 69 |
| FLG328D1 | 96 |

## Rhombus flanged units (Stainless series)
## Set screw type

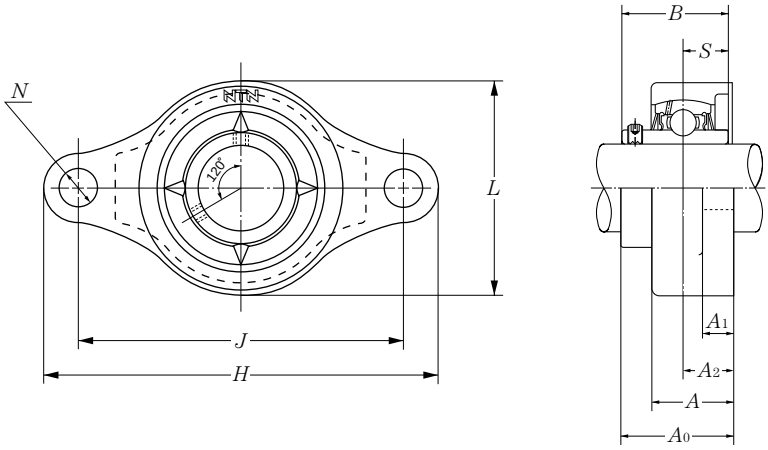


| Shaft dia. mm | Unit number | Nominal dimensions mm | | | | | | | | | | Bolt size mm |
|---|---|---|---|---|---|---|---|---|---|---|---|---|
| | | $H$ | $J$ | $A_2$ | $A_1$ | $A$ | $N$ | $L$ | $A_0$ | $B$ | $S$ | |
| **20** | **F-UCFM204/LP03** | 112 | 90 | 15 | 10 | 25.5 | 12 | 60 | 33.3 | 31 | 12.7 | M10 |
| **25** | **F-UCFM205/LP03** | 127 | 99 | 16 | 10 | 26.5 | 16 | 68 | 35.8 | 34.1 | 14.3 | M14 |
| **30** | **F-UCFM206/LP03** | 145 | 117 | 18 | 10 | 30 | 16 | 80 | 40.2 | 38.1 | 15.9 | M14 |
| **35** | **F-UCFM207/LP03** | 158 | 130 | 19 | 12 | 32 | 16 | 90 | 44.4 | 42.9 | 17.5 | M14 |
| **40** | **F-UCFM208/LP03** | 172 | 144 | 21 | 12 | 35 | 16 | 100 | 51.2 | 49.2 | 19 | M14 |
| **45** | **F-UCFM209/LP03** | 180 | 148 | 22 | 13 | 36 | 19 | 108 | 52.2 | 49.2 | 19 | M16 |
| **50** | **F-UCFM210/LP03** | 189 | 157 | 22 | 13 | 37 | 19 | 115 | 54.6 | 51.6 | 19 | M16 |

Remark: 1) This series uses solid grease in the bearings as standard. A stainless steel bearing unit packed with a food grade grease or heat resistance grease is also available.
2) The basic dynamic load rating $C_r$ of the bearing is different from a bearing made with standard bearing steel.

| Bearing number | Basic load ratings dynamic $C_r$ kN | Basic load ratings static $C_{or}$ kN | Housing number | Mass of unit kg |
|---|---|---|---|---|
| F-UC204D1/LP03 | 9.9 | 6.65 | FM204 | 0.4 |
| F-UC205D1/LP03 | 10.8 | 7.85 | FM205 | 0.6 |
| F-UC206D1/LP03 | 15.0 | 11.3 | FM206 | 0.8 |
| F-UC207D1/LP03 | 19.7 | 15.3 | FM207 | 1.1 |
| F-UC208D1/LP03 | 22.4 | 17.8 | FM208 | 1.4 |
| F-UC209D1/LP03 | 25.2 | 20.4 | FM209 | 1.8 |
| F-UC210D1/LP03 | 27.0 | 23.2 | FM210 | 1.9 |

## Rhombus flanged units (Plastic housing series)
## Set screw type

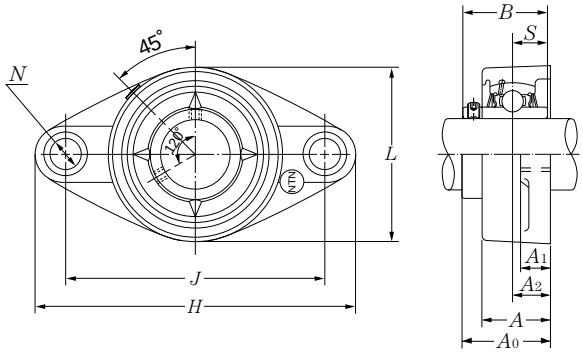


| Shaft dia. mm | Unit number | Nominal dimensions mm | | | | | | | | | | Bolt size mm |
|---|---|---|---|---|---|---|---|---|---|---|---|---|
| | | $H$ | $J$ | $A_2$ | $A_1$ | $A$ | $N$ | $L$ | $A_0$ | $B$ | $S$ | |
| 20 | F-UCFLR204/LP03 | 113 | 90 | 15.4 | 11.4 | 26.5 | 11 ※ | 64 | 33.7 | 31 | 12.7 | M10 |
| 25 | F-UCFLR205/LP03 | 130 | 99 | 17 | 13.5 | 29.1 | 11 ※ | 68 | 36.8 | 34.1 | 14.3 | M10 ※ |
| 30 | F-UCFLR206/LP03 | 148 | 117 | 19 | 13.3 | 30.5 | 11 ※ | 80 | 41.2 | 38.1 | 15.9 | M10 ※ |
| 35 | F-UCFLR207/LP03 | 163 | 130 | 18 | 16.1 | 32.8 | 13 ※ | 90 | 43.4 | 42.9 | 17.5 | M12 ※ |
| 40 | F-UCFLR208/LP03 | 175 | 144 | 21.5 | 20 | 37.5 | 14 ※ | 100 | 51.7 | 49.2 | 19 | M12 ※ |

Remark: 1) This series uses solid grease in the bearings as standard. Ball bearings packed with a food grade grease are also available.
2) Some dimensions are different from those for a cast iron housings (JIS product). (Main parts are shown with " ※ " )
3) The basic dynamic load rating $C_r$ of the bearing is different from a bearing made with standard bearing steel.

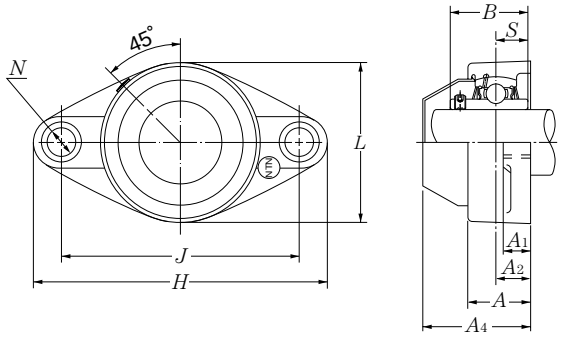


Resin dust cover type

| Bearing number | Basic load ratings dynamic kN $C_r$ | Basic load ratings static kN $C_{or}$ | Housing number | Unit number resin dust cover type | Nominal dimension mm $A_4$ | Mass of unit kg F-UCFLR | Mass of unit kg F-RM-UCFLR |
|---|---|---|---|---|---|---|---|
| F-UC204D1/LP03 | 9.9 | 6.65 | FLR204 | **F-RM-UCFLR204/LP03** | 47 | 0.3 | 0.3 |
| F-UC205D1/LP03 | 10.8 | 7.85 | FLR205 | **F-RM-UCFLR205/LP03** | 51 | 0.3 | 0.3 |
| F-UC206D1/LP03 | 15.0 | 11.3 | FLR206 | **F-RM-UCFLR206/LP03** | 59 | 0.5 | 0.5 |
| F-UC207D1/LP03 | 19.7 | 15.3 | FLR207 | **F-RM-UCFLR207/LP03** | 61 | 0.7 | 0.7 |
| F-UC208D1/LP03 | 22.4 | 17.8 | FLR208 | **F-RM-UCFLR208/LP03** | 71 | 0.9 | 1.0 |

## Modified rhombus flanged units cast housing
## Set screw type

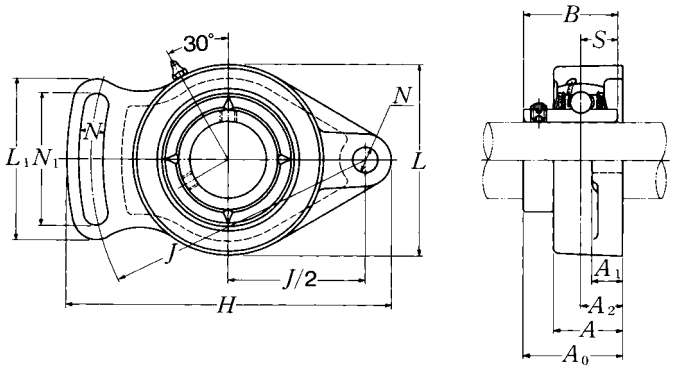


| Shaft dia. mm / inch | Unit number [1] | Nominal dimensions (mm / inch) H | J | A2 | A1 | A | N | N1 | L | L1 | A0 | B | S | Bolt size mm / inch |
|---|---|---|---|---|---|---|---|---|---|---|---|---|---|---|
| 12 | UCFA201D1 | 98 | 78 | 15 | 12 | 25.5 | 10 | 40 | 60 | 50 | 33.3 | 31 | 12.7 | M 8 |
| 1/2 | UCFA201-008D1 | 3 27/32 | 3 1/16 | 19/32 | 15/32 | 1 | 25/64 | 1 9/16 | 2 3/8 | 1 31/32 | 1 5/16 | 1.2205 | 0.500 | 5/16 |
| 15 | UCFA202D1 | 98 | 78 | 15 | 12 | 25.5 | 10 | 40 | 60 | 50 | 33.3 | 31 | 12.7 | M 8 |
| 9/16 | UCFA202-009D1 | 3 27/32 | 3 1/16 | 19/32 | 15/32 | 1 | 25/64 | 1 9/16 | 2 3/8 | 1 31/32 | 1 5/16 | 1.2205 | 0.500 | 5/16 |
| 5/8 | UCFA202-010D1 | | | | | | | | | | | | | |
| 17 | UCFA203D1 | 98 | 78 | 15 | 12 | 25.5 | 10 | 40 | 60 | 50 | 33.3 | 31 | 12.7 | M 8 |
| 11/16 | UCFA203-011D1 | 3 27/32 | 3 1/16 | 19/32 | 15/32 | 1 | 25/64 | 1 9/16 | 2 3/8 | 1 31/32 | 1 5/16 | 1.2205 | 0.500 | 5/16 |
| 20 | UCFA204D1 | 98 | 78 | 15 | 12 | 25.5 | 10 | 40 | 60 | 50 | 33.3 | 31 | 12.7 | M 8 |
| 3/4 | UCFA204-012D1 | 3 27/32 | 3 1/16 | 19/32 | 15/32 | 1 | 25/64 | 1 9/16 | 2 3/8 | 1 31/32 | 1 5/16 | 1.2205 | 0.500 | 5/16 |
| 25 | UCFA205D1 | 124 | 96 | 15 | 14 | 26.5 | 13 | 49 | 70 | 64 | 34.8 | 34.1 | 14.3 | M10 |
| 13/16 | UCFA205-013D1 | | | | | | | | | | | | | |
| 7/8 | UCFA205-014D1 | 4 7/8 | 3 25/32 | 19/32 | 9/16 | 1 1/32 | 33/64 | 1 15/16 | 2 3/4 | 2 17/32 | 1 3/8 | 1.3425 | 0.563 | 3/8 |
| 15/16 | UCFA205-015D1 | | | | | | | | | | | | | |
| 1 | UCFA205-100D1 | | | | | | | | | | | | | |
| 30 | UCFA206D1 | 141 | 115 | 18 | 14 | 31 | 13 | 53 | 80 | 68 | 40.2 | 38.1 | 15.9 | M10 |
| 1 1/16 | UCFA206-101D1 | | | | | | | | | | | | | |
| 1 1/8 | UCFA206-102D1 | 5 9/16 | 4 17/32 | 45/64 | 9/16 | 1 7/32 | 33/64 | 2 3/32 | 3 5/32 | 2 11/16 | 1 37/64 | 1.5000 | 0.626 | 3/8 |
| 1 3/16 | UCFA206-103D1 | | | | | | | | | | | | | |
| 1 1/4 | UCFA206-104D1 | | | | | | | | | | | | | |
| 35 | UCFA207D1 | 155 | 128 | 20 | 16 | 34 | 15 | 60 | 90 | 75 | 45.4 | 42.9 | 17.5 | M12 |
| 1 1/4 | UCFA207-104D1 | | | | | | | | | | | | | |
| 1 5/16 | UCFA207-105D1 | 6 3/32 | 5 1/32 | 25/32 | 5/8 | 1 11/32 | 19/32 | 2 3/8 | 3 17/32 | 2 15/16 | 1 25/32 | 1.6890 | 0.689 | 7/16 |
| 1 3/8 | UCFA207-106D1 | | | | | | | | | | | | | |
| 1 7/16 | UCFA207-107D1 | | | | | | | | | | | | | |
| 40 | UCFA208D1 | 171 | 142 | 22 | 16 | 36 | 15 | 69 | 100 | 84 | 52.2 | 49.2 | 19 | M12 |
| 1 1/2 | UCFA208-108D1 | 6 23/32 | 5 19/32 | 55/64 | 5/8 | 1 13/32 | 19/32 | 2 23/32 | 3 15/16 | 3 5/16 | 2 1/16 | 1.9370 | 0.748 | 7/16 |
| 1 9/16 | UCFA208-109D1 | | | | | | | | | | | | | |

Remarks: 1) These numbers indicate relubricatable type. If maintenance free type is needed, please order without suffix "D1".
Note: Please refer to page 36 for size of grease fitting.

| Bearing number | Housing [1)] number | Mass of unit kg lb |
|---|---|---|
| UC201D1 | FA204D1 | 0.5 |
| UC201-008D1 | FA204D1 | 1.1 |
| UC202D1 | FA204D1 | 0.5 |
| UC202-009D1 | FA204D1 | 1.1 |
| UC202-010D1 | FA204D1 | |
| UC203D1 | FA204D1 | 0.5 |
| UC203-011D1 | FA204D1 | 1.1 |
| UC204D1 | FA204D1 | 0.5 |
| UC204-012D1 | FA204D1 | 1.1 |
| UC205D1 | FA205D1 | 0.7 |
| UC205-013D1 | FA205D1 | 1.5 |
| UC205-014D1 | FA205D1 | |
| UC205-015D1 | FA205D1 | |
| UC205-100D1 | FA205D1 | |
| UC206D1 | FA206D1 | 0.9 |
| UC206-101D1 | FA206D1 | 2.0 |
| UC206-102D1 | FA206D1 | |
| UC206-103D1 | FA206D1 | |
| UC206-104D1 | FA206D1 | |
| UC207D1 | FA207D1 | 1.2 |
| UC207-104D1 | FA207D1 | 2.7 |
| UC207-105D1 | FA207D1 | |
| UC207-106D1 | FA207D1 | |
| UC207-107D1 | FA207D1 | |
| UC208D1 | FA208D1 | 1.5 |
| UC208-108D1 | FA208D1 | 3.3 |
| UC208-109D1 | FA208D1 | |

## Modified rhombus flanged units cast housing
## Set screw type

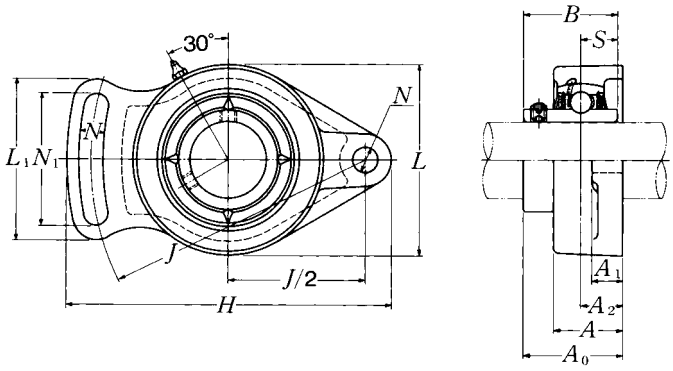


| Shaft dia. mm / inch | Unit number [1] | Nominal dimensions | | | | | | | | | | | | Bolt size mm / inch |
|---|---|---|---|---|---|---|---|---|---|---|---|---|---|---|
| | | | | | | | mm | | inch | | | | | |
| | | $H$ | $J$ | $A_2$ | $A_1$ | $A$ | $N$ | $N_1$ | $L$ | $L_1$ | $A_0$ | $B$ | $S$ | |
| **45** | **UCFA209D1** | 179 | 146 | 22 | 18 | 38 | 17 | 72 | 110 | 88 | 52.2 | 49.2 | 19 | M14 |
| **1 5/8** | **UCFA209-110D1** | | | | | | | | | | | | | |
| **1 11/16** | **UCFA209-111D1** | 7 1/16 | 5 3/4 | 55/64 | 23/32 | 1 1/2 | 43/64 | 2 27/32 | 4 11/32 | 3 15/32 | 2 1/16 | 1.9370 | 0.748 | 1/2 |
| **1 3/4** | **UCFA209-112D1** | | | | | | | | | | | | | |
| **50** | **UCFA210D1** | 189 | 155 | 22 | 18 | 40 | 17 | 75 | 115 | 92 | 54.6 | 51.6 | 19 | M14 |
| **1 13/16** | **UCFA210-113D1** | | | | | | | | | | | | | |
| **1 7/8** | **UCFA210-114D1** | 7 7/16 | 6 3/32 | 55/64 | 23/32 | 1 9/16 | 43/64 | 2 15/16 | 4 17/32 | 3 5/8 | 2 5/32 | 2.0315 | 0.748 | 1/2 |
| **1 15/16** | **UCFA210-115D1** | | | | | | | | | | | | | |
| **2** | **UCFA210-200D1** | | | | | | | | | | | | | |
| **55** | **UCFA211D1** | 216 | 182 | 26 | 20 | 43 | 17 | 85 | 130 | 102 | 59.4 | 55.6 | 22.2 | M14 |
| **2** | **UCFA211-200D1** | | | | | | | | | | | | | |
| **2 1/16** | **UCFA211-201D1** | 8 1/8 | 7 5/32 | 1 1/32 | 25/32 | 1 11/16 | 43/64 | 3 11/32 | 5 1/8 | 4 1/32 | 2 11/32 | 2.1890 | 0.874 | 1/2 |
| **2 1/8** | **UCFA211-202D1** | | | | | | | | | | | | | |
| **2 3/16** | **UCFA211-203D1** | | | | | | | | | | | | | |

Remarks: 1) These numbers indicate relubricatable type. If maintenance free type is needed, please order without suffix "D1".
Note: Please refer to page 36 for size of grease fitting.

| Bearing number | Housing [1)] number | Mass of unit kg lb |
|---|---|---|
| UC209D1 | FA209D1 | 1.9 |
| UC209-110D1 | FA209D1 | |
| UC209-111D1 | FA209D1 | 4.2 |
| UC209-112D1 | FA209D1 | |
| UC210D1 | FA210D1 | 2.2 |
| UC210-113D1 | FA210D1 | |
| UC210-114D1 | FA210D1 | 4.9 |
| UC210-115D1 | FA210D1 | |
| UC210-200D1 | FA210D1 | |
| UC211D1 | FA211D1 | 2.9 |
| UC211-200D1 | FA211D1 | |
| UC211-201D1 | FA211D1 | 6.4 |
| UC211-202D1 | FA211D1 | |
| UC211-203D1 | FA211D1 | |

## Modified flanged units cast housing
## Set screw type

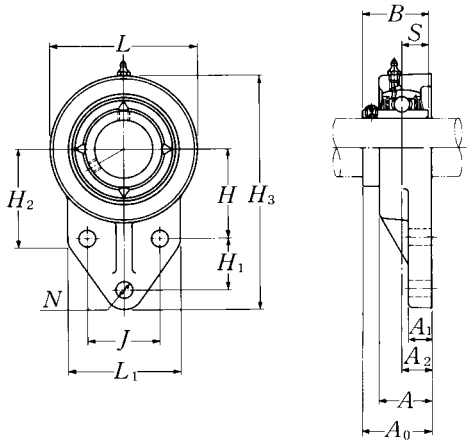


| Shaft dia. mm / inch | Unit number [1] | Nominal dimensions | | | | | | | | | | | | | |
|---|---|---|---|---|---|---|---|---|---|---|---|---|---|---|---|
| | | | | | | | | mm / inch | | | | | | | |
| | | $H_3$ | $J$ | $A_2$ | $A_1$ | $A$ | $N$ | $H$ | $H_1$ | $L_1$ | $H_2$ | $L$ | $A_0$ | $B$ | $S$ |
| 12 | UCFH201D1 | 110 | 32 | 15 | 13 | 25.5 | 10 | 42 | 27 | 52 | 52 | 62 | 33.3 | 31 | 12.7 |
| 1/2 | UCFH201-008D1 | 4 11/32 | 1 17/64 | 19/32 | 1/2 | 1 | 25/64 | 1 21/32 | 1 1/16 | 2 1/16 | 2 1/16 | 2 7/16 | 1 5/16 | 1.2205 | 0.500 |
| 15 | UCFH202D1 | 110 | 32 | 15 | 13 | 25.5 | 10 | 42 | 27 | 52 | 52 | 62 | 33.3 | 31 | 12.7 |
| 9/16 | UCFH202-009D1 | 4 11/32 | 1 17/64 | 19/32 | 1/2 | 1 | 25/64 | 1 21/32 | 1 1/16 | 2 1/16 | 2 1/16 | 2 7/16 | 1 5/16 | 1.2205 | 0.500 |
| 5/8 | UCFH202-010D1 | | | | | | | | | | | | | | |
| 17 | UCFH203D1 | 110 | 32 | 15 | 13 | 25.5 | 10 | 42 | 27 | 52 | 52 | 62 | 33.3 | 31 | 12.7 |
| 11/16 | UCFH203-011D1 | 4 11/32 | 1 17/64 | 19/32 | 1/2 | 1 | 25/64 | 1 21/32 | 1 1/16 | 2 1/16 | 2 1/16 | 2 7/16 | 1 5/16 | 1.2205 | 0.500 |
| 20 | UCFH204D1 | 110 | 32 | 15 | 13 | 25.5 | 10 | 42 | 27 | 52 | 52 | 62 | 33.3 | 31 | 12.7 |
| 3/4 | UCFH204-012D1 | 4 11/32 | 1 17/64 | 19/32 | 1/2 | 1 | 25/64 | 1 21/32 | 1 1/16 | 2 1/16 | 2 1/16 | 2 7/16 | 1 5/16 | 1.2205 | 0.500 |
| 25 | UCFH205D1 | 116 | 34 | 16 | 13 | 27 | 10 | 45 | 27 | 56 | 52 | 68 | 35.8 | 34.1 | 14.3 |
| 13/16 | UCFH205-013D1 | | | | | | | | | | | | | | |
| 7/8 | UCFH205-014D1 | 4 9/16 | 1 11/32 | 5/8 | 1/2 | 1 1/16 | 25/64 | 1 49/64 | 1 1/16 | 2 7/32 | 2 1/16 | 2 11/16 | 1 13/32 | 1.3425 | 0.563 |
| 15/16 | UCFH205-015D1 | | | | | | | | | | | | | | |
| 1 | UCFH205-100D1 | | | | | | | | | | | | | | |
| 30 | UCFH206D1 | 130 | 40 | 18 | 13 | 31 | 10 | 50 | 29 | 65 | 55 | 78 | 40.2 | 38.1 | 15.9 |
| 1 1/16 | UCFH206-101D1 | | | | | | | | | | | | | | |
| 1 1/8 | UCFH206-102D1 | 5 1/8 | 37/64 | 45/64 | 1/2 | 1 7/32 | 25/64 | 1 31/32 | 1 9/64 | 2 9/16 | 2 5/32 | 3 1/16 | 1 37/64 | 1.5000 | 0.626 |
| 1 3/16 | UCFH206-103D1 | | | | | | | | | | | | | | |
| 1 1/4 | UCFH206-104D1 | | | | | | | | | | | | | | |
| 35 | UCFH207D1 | 144 | 46 | 19 | 15 | 34 | 10 | 55 | 32 | 70 | 62 | 90 | 44.4 | 42.9 | 17.5 |
| 1 1/4 | UCFH207-104D1 | | | | | | | | | | | | | | |
| 1 5/16 | UCFH207-105D1 | 5 21/32 | 1 13/16 | 3/4 | 19/32 | 1 11/32 | 25/64 | 2 11/64 | 1 17/64 | 2 3/4 | 2 7/16 | 3 17/32 | 1 3/4 | 1.6890 | 0.689 |
| 1 3/8 | UCFH207-106D1 | | | | | | | | | | | | | | |
| 1 7/16 | UCFH207-107D1 | | | | | | | | | | | | | | |
| 40 | UCFH208D1 | 164 | 50 | 21 | 16 | 36 | 12 | 60 | 41 | 78 | 72 | 100 | 51.2 | 49.2 | 19 |
| 1 1/2 | UCFH208-108D1 | 6 15/32 | 1 31/32 | 53/64 | 5/8 | 1 13/32 | 15/32 | 2 23/64 | 1 39/64 | 3 1/16 | 2 27/32 | 3 15/16 | 2 1/64 | 1.9370 | 0.748 |
| 1 9/16 | UCFH208-109D1 | | | | | | | | | | | | | | |
| 45 | UCFH209D1 | 174 | 54 | 22 | 18 | 38 | 12 | 65 | 43 | 80 | 76 | 106 | 52.2 | 49.2 | 19 |
| 1 5/8 | UCFH209-110D1 | | | | | | | | | | | | | | |
| 1 11/16 | UCFH209-111D1 | 6 27/32 | 2 1/8 | 55/64 | 23/32 | 1 1/2 | 15/32 | 2 9/16 | 1 11/16 | 3 5/32 | 3 | 4 3/16 | 2 1/16 | 1.9370 | 0.748 |
| 1 3/4 | UCFH209-112D1 | | | | | | | | | | | | | | |

Remarks: 1) These numbers indicate relubricatable type. If maintenance free type is needed, please order without suffix "D1".
Note: Please refer to page 36 for size of grease fitting.

| Bolt size<br>mm<br>inch | Bearing number | Housing [1)] number | Mass of unit<br>kg lb |
|---|---|---|---|
| M 8<br>5/16 | UC201D1<br>UC201-008D1 | FH204D1<br>FH204D1 | 0.6<br>1.3 |
| M 8<br>5/16 | UC202D1<br>UC202-009D1<br>UC202-010D1 | FH204D1<br>FH204D1<br>FH204D1 | 0.6<br>1.3 |
| M 8<br>5/16 | UC203D1<br>UC203-011D1 | FH204D1<br>FH204D1 | 0.6<br>1.3 |
| M 8<br>5/16 | UC204D1<br>UC204-012D1 | FH204D1<br>FH204D1 | 0.6<br>1.3 |
| M 8<br>5/16 | UC205D1<br>UC205-013D1<br>UC205-014D1<br>UC205-015D1<br>UC205-100D1 | FH205D1<br>FH205D1<br>FH205D1<br>FH205D1<br>FH205D1 | 0.7<br>1.5 |
| M 8<br>5/16 | UC206D1<br>UC206-101D1<br>UC206-102D1<br>UC206-103D1<br>UC206-104D1 | FH206D1<br>FH206D1<br>FH206D1<br>FH206D1<br>FH206D1 | 0.9<br>2.0 |
| M 8<br>5/16 | UC207D1<br>UC207-104D1<br>UC207-105D1<br>UC207-106D1<br>UC207-107D1 | FH207D1<br>FH207D1<br>FH207D1<br>FH207D1<br>FH207D1 | 1.3<br>2.9 |
| M10<br>3/8 | UC208D1<br>UC208-108D1<br>UC208-109D1 | FH208D1<br>FH208D1<br>FH208D1 | 1.8<br>4.0 |
| M10<br>3/8 | UC209D1<br>UC209-110D1<br>UC209-111D1<br>UC209-112D1 | FH209D1<br>FH209D1<br>FH209D1<br>FH209D1 | 2.1<br>4.6 |

## Modified flanged units cast housing
## Set screw type

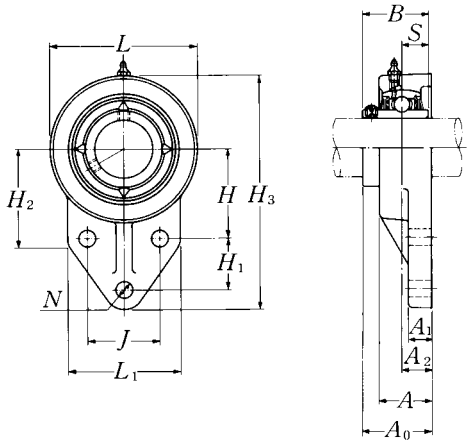


| Shaft dia. mm / inch | Unit number [1] | Nominal dimensions mm | | | | | | | | | | | | | |
|---|---|---|---|---|---|---|---|---|---|---|---|---|---|---|---|
| | | $H_3$ | $J$ | $A_2$ | $A_1$ | $A$ | $N$ | $H$ | $H_1$ | $L_1$ | $H_2$ | $L$ | $A_0$ | $B$ | $S$ |
| 50 | UCFH210D1 | 184 | 58 | 22 | 18 | 40 | 12 | 68 | 46 | 86 | 82 | 112 | 54.6 | 51.6 | 19 |
| | | inch | | | | | | | | | | | | | |
| 1 13/16 | UCFH210-113D1 | | | | | | | | | | | | | | |
| 1 7/8 | UCFH210-114D1 | 7 1/4 | 2 9/32 | 55/64 | 23/32 | 1 9/16 | 15/32 | 2 43/64 | 1 13/16 | 3 3/8 | 3 7/32 | 4 13/32 | 2 5/32 | 2.0315 | 0.748 |
| 1 15/16 | UCFH210-115D1 | | | | | | | | | | | | | | |
| 2 | UCFH210-200D1 | | | | | | | | | | | | | | |

Remarks: 1) These numbers indicate relubricatable type. If maintenance free type is needed, please order without suffix "D1".
Note: Please refer to page 36 for size of grease fitting.

| Bolt size<br>mm<br>inch | Bearing number | Housing [1)] number | Mass of unit<br>kg lb |
|---|---|---|---|
| M10 | UC210D1 | FH210D1 | 2.4 |
| 3/8 | UC210-113D1 | FH210D1 | 5.3 |
| | UC210-114D1 | FH210D1 | |
| | UC210-115D1 | FH210D1 | |
| | UC210-200D1 | FH210D1 | |

## Light rhombus flanged units cast housing
## Set screw type

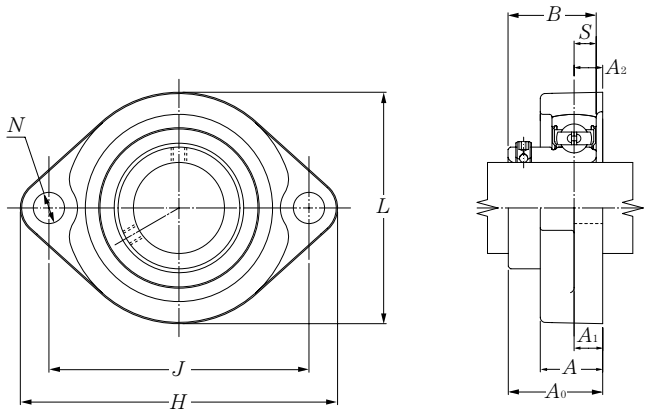


| Shaft dia. mm / inch | Unit number [1] | Nominal dimensions mm / inch H | J | A2 | A1 | A | N | L | A0 | B | S | Bolt size mm / inch | Bearing number[1] |
|---|---|---|---|---|---|---|---|---|---|---|---|---|---|
| 12 | ASFB201 | 81 | 63.5 | 9.5 | 9.5 | 18 | 7 | 56 | 25.5 | 22 | 6 | M6 | AS201 |
| 1/2 | ASFB201-008 | 3 3/16 | 2 1/2 | 3/8 | 3/8 | 23/32 | 9/32 | 2 7/32 | 1 | 0.8661 | 0.236 | 1/4 | AS201-008 |
| 15 | ASFB202 | 81 | 63.5 | 9.5 | 9.5 | 18 | 7 | 56 | 25.5 | 22 | 6 | M6 | AS202 |
| 9/16 | ASFB202-009 | 3 3/16 | 2 1/2 | 3/8 | 3/8 | 23/32 | 9/32 | 2 7/32 | 1 | 0.8661 | 0.236 | 1/4 | AS202-009 |
| 5/8 | ASFB202-010 | | | | | | | | | | | | AS202-010 |
| 17 | ASFB203 | 81 | 63.5 | 9.5 | 9.5 | 18 | 7 | 56 | 25.5 | 22 | 6 | M6 | AS203 |
| 11/16 | ASFB203-011 | 3 3/16 | 2 1/2 | 3/8 | 3/8 | 23/32 | 9/32 | 2 7/32 | 1 | 0.8661 | 0.236 | 1/4 | AS203-011 |
| 20 | ASFB204 | 90 | 71.5 | 11 | 11 | 20 | 10 | 61 | 29 | 25 | 7 | M8 | AS204 |
| 3/4 | ASFB204-012 | 3 35/64 | 2 13/16 | 7/16 | 7/16 | 25/32 | 25/64 | 2 13/32 | 1 9/64 | 0.9843 | 0.276 | 5/16 | AS204-012 |
| 25 | ASFB205 | 95 | 76 | 11 | 11 | 20 | 10 | 64 | 30.5 | 27 | 7.5 | M8 | AS205 |
| 13/16 | ASFB205-013 | | | | | | | | | | | | AS205-013 |
| 7/8 | ASFB205-014 | 3 3/4 | 2 63/64 | 7/16 | 7/16 | 25/32 | 25/64 | 2 17/32 | 1 13/64 | 1.0630 | 0.295 | 5/16 | AS205-014 |
| 15/16 | ASFB205-015 | | | | | | | | | | | | AS205-015 |
| 1 | ASFB205-100 | | | | | | | | | | | | AS205-100 |
| 30 | ASFB206 | 113 | 90.5 | 12 | 12 | 22.5 | 12 | 76 | 33 | 29 | 8 | M10 | AS206 |
| 1 1/16 | ASFB206-101 | | | | | | | | | | | | AS206-101 |
| 1 1/8 | ASFB206-102 | 4 7/16 | 3 9/16 | 15/32 | 15/32 | 7/8 | 15/32 | 3 | 1 19/64 | 1.1417 | 0.315 | 3/8 | AS206-102 |
| 1 3/16 | ASFB206-103 | | | | | | | | | | | | AS206-103 |
| 1 1/4 | ASFB206-104 | | | | | | | | | | | | AS206-104 |
| 35 | ASFB207 | 122 | 100 | 11 | 13 | 24 | 12 | 89 | 36.5 | 34 | 8.5 | M10 | AS207 |
| 1 1/4 | ASFB207-104 | | | | | | | | | | | | AS207-104 |
| 1 5/16 | ASFB207-105 | 4 51/64 | 3 15/16 | 7/16 | 1/2 | 15/16 | 15/32 | 3 1/2 | 1 7/16 | 1.3386 | 0.335 | 3/8 | AS207-105 |
| 1 3/8 | ASFB207-106 | | | | | | | | | | | | AS207-106 |
| 1 7/16 | ASFB207-107 | | | | | | | | | | | | AS207-107 |

Remarks: 1) If relubricatable type is needed, please order with suffix "D1".

| Housing[1)] number | Mass of unit kg | lb |
|---|---|---|
| FB201 | 0.3 | |
| FB201 | 0.7 | |
| FB201 | 0.3 | |
| FB201 | 0.7 | |
| FB201 | 0.2 | |
| FB201 | 0.4 | |
| FB204 | 0.3 | |
| FB204 | 0.7 | |
| FB205 | 0.3 | |
| FB205 | 0.7 | |
| FB206 | 0.5 | |
| FB206 | 1.1 | |
| FB207 | 0.8 | |
| FB207 | 1.8 | |

## Light rhombus flanged units cast housing
## Set screw type

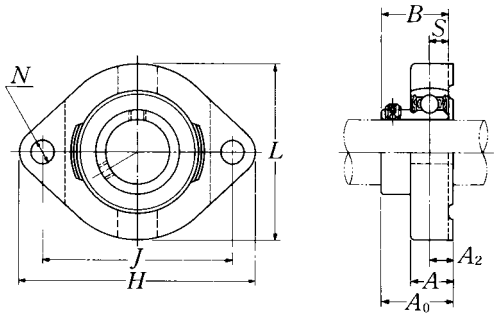


| Shaft dia. mm / inch | Unit number [1] | Nominal dimensions mm / inch H | J | A2 | A | N | L | A0 | B | S | Bolt size mm / inch | Bearing number[1] |
|---|---|---|---|---|---|---|---|---|---|---|---|---|
| 12 | ASFD201 | 81 | 63 | 8.5 | 15 | 7 | 59 | 24.5 | 22 | 6 | M6 | AS201 |
| 1/2 | ASFD201-008 | 3 3/16 | 2 31/64 | 21/64 | 19/32 | 9/32 | 2 5/16 | 31/32 | 0.8661 | 0.236 | 1/4 | AS201-008 |
| 15 | ASFD202 | 81 | 63 | 8.5 | 15 | 7 | 59 | 24.5 | 22 | 6 | M6 | AS202 |
| 9/16 | ASFD202-009 | 3 3/16 | 2 31/64 | 21/64 | 19/32 | 9/32 | 2 5/16 | 31/32 | 0.8661 | 0.236 | 1/4 | AS202-009 |
| 5/8 | ASFD202-010 | | | | | | | | | | | AS202-010 |
| 17 | ASFD203 | 81 | 63 | 8.5 | 15 | 7 | 59 | 24.5 | 22 | 6 | M6 | AS203 |
| 11/16 | ASFD203-011 | 3 3/16 | 2 31/64 | 21/64 | 19/32 | 9/32 | 2 5/16 | 31/32 | 0.8661 | 0.236 | 1/4 | AS203-011 |
| 20 | ASFD204 | 90 | 71 | 9.5 | 17 | 10 | 67 | 27.5 | 25 | 7 | M8 | AS204 |
| 3/4 | ASFD204-012 | 3 35/64 | 2 51/64 | 3/8 | 21/32 | 25/64 | 2 5/8 | 1 5/64 | 0.9843 | 0.276 | 5/16 | AS204-012 |
| 25 | ASFD205 | 95 | 76 | 9.5 | 17 | 10 | 71 | 29 | 27 | 7.5 | M8 | AS205 |
| 13/16 | ASFD205-013 | | | | | | | | | | | AS205-013 |
| 7/8 | ASFD205-014 | 3 3/4 | 2 63/64 | 3/8 | 21/32 | 25/64 | 2 25/32 | 1 9/64 | 1.0630 | 0.295 | 5/16 | AS205-014 |
| 15/16 | ASFD205-015 | | | | | | | | | | | AS205-015 |
| 1 | ASFD205-100 | | | | | | | | | | | AS205-100 |
| 30 | ASFD206 | 113 | 90 | 12 | 21 | 12 | 84 | 33 | 29 | 8 | M10 | AS206 |
| 1 1/16 | ASFD206-101 | | | | | | | | | | | AS206-101 |
| 1 1/8 | ASFD206-102 | 4 7/16 | 3 35/64 | 15/32 | 13/16 | 15/32 | 3 5/16 | 1 19/64 | 1.1417 | 0.315 | 3/8 | AS206-102 |
| 1 3/16 | ASFD206-103 | | | | | | | | | | | AS206-103 |
| 1 1/4 | ASFD206-104 | | | | | | | | | | | AS206-104 |
| 35 | ASFD207 | 125 | 100 | 12.5 | 22 | 12 | 94 | 38 | 34 | 8.5 | M10 | AS207 |
| 1 1/4 | ASFD207-104 | | | | | | | | | | | AS207-104 |
| 1 5/16 | ASFD207-105 | 4 29/32 | 3 15/16 | 31/64 | 7/8 | 15/32 | 3 11/16 | 1 1/2 | 1.3386 | 0.335 | 3/8 | AS207-105 |
| 1 3/8 | ASFD207-106 | | | | | | | | | | | AS207-106 |
| 1 7/16 | ASFD207-107 | | | | | | | | | | | AS207-107 |
| 40 | ASFD208 | 148 | 119 | 14.5 | 25 | 13.5 | 104 | 43.5 | 38 | 9 | M12 | AS208 |
| 1 1/2 | ASFD208-108 | 5 53/64 | 4 11/16 | 37/64 | 31/32 | 17/32 | 4 3/32 | 1 23/32 | 1.4961 | 0.354 | 7/16 | AS208-108 |
| 1 9/16 | ASFD208-109 | | | | | | | | | | | AS208-109 |

Remarks: 1) If relubricatable type is needed, please order with prefix "A-" and suffix "D1".
Example: A-ASFD201D1

| Housing[1)] number | Mass of unit kg | lb |
|---|---|---|
| FD201 | 0.3 | |
| FD201 | | 0.7 |
| FD201 | 0.3 | |
| FD201 | | 0.7 |
| FD201 | | |
| FD201 | 0.3 | |
| FD201 | | 0.7 |
| FD204 | 0.4 | |
| FD204 | | 0.9 |
| FD205 | 0.5 | |
| FD205 | | |
| FD205 | | 1.1 |
| FD205 | | |
| FD205 | | |
| FD206 | 0.8 | |
| FD206 | | |
| FD206 | | 1.8 |
| FD206 | | |
| FD206 | | |
| FD207 | 0.9 | |
| FD207 | | |
| FD207 | | 2.0 |
| FD207 | | |
| FD207 | | |
| FD208 | 1.3 | |
| FD208 | | 2.9 |
| FD208 | | |

## Rhombus flanged units ductile cast housing (Ductile series)
## Set screw type

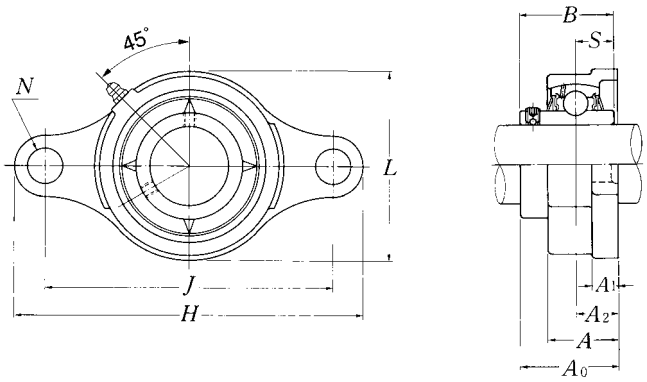


| Shaft dia. mm | Unit number [1] | Nominal dimensions mm | | | | | | | | | | Bolt size mm | Bearing number |
|---|---|---|---|---|---|---|---|---|---|---|---|---|---|
| | | $H$ | $J$ | $A_2$ | $A_1$ | $A$ | $N$ | $L$ | $A_0$ | $B$ | $S$ | | |
| **12** | **UCFE201D1** | 112 | 90 | 15 | 10 | 25 | 12 | 57 | 33.3 | 31 | 12.7 | M10 | UC201D1 |
| **15** | **UCFE202D1** | 112 | 90 | 15 | 10 | 25 | 12 | 57 | 33.3 | 31 | 12.7 | M10 | UC202D1 |
| **17** | **UCFE203D1** | 112 | 90 | 15 | 10 | 25 | 12 | 57 | 33.3 | 31 | 12.7 | M10 | UC203D1 |
| **20** | **UCFE204D1** | 112 | 90 | 15 | 10 | 25 | 12 | 57 | 33.3 | 31 | 12.7 | M10 | UC204D1 |
| **25** | **UCFE205D1** | 127 | 99 | 16 | 10 | 26 | 16 | 62 | 35.8 | 34.1 | 14.3 | M14 | UC205D1 |
| **30** | **UCFE206D1** | 145 | 117 | 18 | 10 | 30 | 16 | 73 | 40.2 | 38.1 | 15.9 | M14 | UC206D1 |
| **35** | **UCFE207D1** | 158 | 130 | 19 | 12 | 32 | 16 | 86 | 44.4 | 42.9 | 17.5 | M14 | UC207D1 |
| **40** | **UCFE208D1** | 172 | 144 | 21 | 12 | 35 | 16 | 95 | 51.2 | 49.2 | 19 | M14 | UC208D1 |
| **45** | **UCFE209D1** | 180 | 148 | 22 | 13 | 36 | 19 | 101 | 52.2 | 49.2 | 19 | M16 | UC209D1 |
| **50** | **UCFE210D1** | 189 | 157 | 22 | 13 | 37 | 19 | 106 | 54.6 | 51.6 | 19 | M16 | UC210D1 |
| **55** | **UCFE211D1** | 216 | 184 | 25 | 18 | 41 | 19 | 118 | 58.4 | 55.6 | 22.2 | M16 | UC211D1 |
| **60** | **UCFE212D1** | 241 | 202 | 29 | 18 | 46 | 23 | 129 | 68.7 | 65.1 | 25.4 | M20 | UC212D1 |

Remarks: 1) These numbers indicate relubricatable type. If maintenance free type is needed, please order without suffix "D1".
Note: Please refer to page 36 for size of grease fitting.

| Housing[1)] number | Mass of unit kg |
|---|---|
| FE204D1 | 0.4 |
| FE204D1 | 0.4 |
| FE204D1 | 0.4 |
| FE204D1 | 0.4 |
| FE205D1 | 0.4 |
| FE206D1 | 0.6 |
| FE207D1 | 0.9 |
| FE208D1 | 1.2 |
| FE209D1 | 1.3 |
| FE210D1 | 1.5 |
| FE211D1 | 2.1 |
| FE212D1 | 2.8 |

## Round flanged units pressed steel housing
## Set screw type

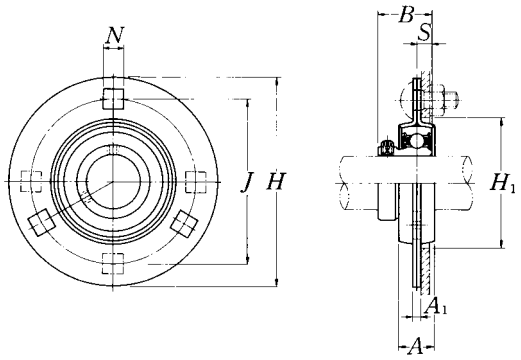


| Shaft dia. mm / inch | Unit number | Nominal dimensions mm / inch: H | J | A1 | N1) | A | B | S | H1 min. | Bolt size mm / inch | Max. load recommended N radial | lbf axial | Bearing number |
|---|---|---|---|---|---|---|---|---|---|---|---|---|---|
| 12 | ASPF201 | 81 | 63.5 | 4 | 7.1 | 14 | 22 | 6 | 49 | M6 | 2 700 | 1 350 | AS201 |
| 1/2 | ASPF201-008 | 3 3/16 | 2 1/2 | 0.157 | 9/32 | 9/16 | 0.8661 | 0.236 | 1 59/64 | 1/4 | 600 | 300 | AS201-008 |
| 15 | ASPF202 | 81 | 63.5 | 4 | 7.1 | 14 | 22 | 6 | 49 | M6 | 2 700 | 1 350 | AS202 |
| 9/16 | ASPF202-009 | 3 3/16 | 2 1/2 | 0.157 | 9/32 | 9/16 | 0.8661 | 0.236 | 1 59/64 | 1/4 | 600 | 300 | AS202-009 |
| 5/8 | ASPF202-010 | | | | | | | | | | | | AS202-010 |
| 17 | ASPF203 | 81 | 63.5 | 4 | 7.1 | 14 | 22 | 6 | 49 | M6 | 2 700 | 1 350 | AS203 |
| 11/16 | ASPF203-011 | 3 3/16 | 2 1/2 | 0.157 | 9/32 | 9/16 | 0.8661 | 0.236 | 1 59/64 | 1/4 | 600 | 300 | AS203-011 |
| 20 | ASPF204 | 90 | 71.5 | 4 | 9 | 16 | 25 | 7 | 56 | M8 | 3 000 | 1 500 | AS204 |
| 3/4 | ASPF204-012 | 3 35/64 | 2 13/16 | 0.157 | 23/64 | 5/8 | 0.9843 | 0.276 | 2 13/64 | 5/16 | 660 | 330 | AS204-012 |
| 25 | ASPF205 | 95 | 76 | 4 | 9 | 18 | 27 | 7.5 | 60 | M8 | 4 000 | 2 000 | AS205 |
| 13/16 | ASPF205-013 | | | | | | | | | | | | AS205-013 |
| 7/8 | ASPF205-014 | 3 3/4 | 2 63/64 | 0.157 | 23/64 | 23/32 | 1.0630 | 0.295 | 2 23/64 | 5/16 | 880 | 440 | AS205-014 |
| 15/16 | ASPF205-015 | | | | | | | | | | | | AS205-015 |
| 1 | ASPF205-100 | | | | | | | | | | | | AS205-100 |
| 30 | ASPF206 | 113 | 90.5 | 5.2 | 11 | 18 | 29 | 8 | 71 | M10 | 5 000 | 2 500 | AS206 |
| 1 1/16 | ASPF206-101 | | | | | | | | | | | | AS206-101 |
| 1 1/8 | ASPF206-102 | 4 7/16 | 3 9/16 | 0.205 | 7/16 | 23/32 | 1.1417 | 0.315 | 2 51/64 | 3/8 | 1 100 | 550 | AS206-102 |
| 1 3/16 | ASPF206-103 | | | | | | | | | | | | AS206-103 |
| 1 1/4 | ASPF206-104 | | | | | | | | | | | | AS206-104 |
| 35 | ASPF207 | 122 | 100 | 5.2 | 11 | 20 | 34 | 8.5 | 81 | M10 | 6 000 | 3 000 | AS207 |
| 1 1/4 | ASPF207-104 | | | | | | | | | | | | AS207-104 |
| 1 5/16 | ASPF207-105 | 4 13/16 | 3 15/16 | 0.205 | 7/16 | 25/32 | 1.3386 | 0.335 | 3 3/16 | 3/8 | 1 300 | 650 | AS207-105 |
| 1 3/8 | ASPF207-106 | | | | | | | | | | | | AS207-106 |
| 1 7/16 | ASPF207-107 | | | | | | | | | | | | AS207-107 |
| 40 | ASPF208 | 148 | 119 | 6.8 | 13.5 | 21 | 38 | 9 | 91 | M12 | 7 000 | 3 500 | AS208 |
| 1 1/2 | ASPF208-108 | 5 13/16 | 4 11/16 | 0.268 | 17/32 | 13/16 | 1.4961 | 0.354 | 3 37/64 | 1/2 | 1 500 | 750 | AS208-108 |
| 1 9/16 | ASPF208-109 | | | | | | | | | | | | AS208-109 |

Remarks: 1) ASPF208 has four bolt holes.
2) The permissible load only applies in applications where the load is stable and the speed is 2400 $min^{-1}$ or less.

| Housing number | Mass of unit kg lb |
|---|---|
| PF203<br>PF203 | 0.2<br>0.4 |
| PF203<br>PF203<br>PF203 | 0.2<br>0.4 |
| PF203<br>PF203 | 0.2<br>0.4 |
| PF204<br>PF204 | 0.2<br>0.4 |
| PF205<br>PF205<br>PF205<br>PF205<br>PF205 | 0.3<br>0.7 |
| PF206<br>PF206<br>PF206<br>PF206<br>PF206 | 0.4<br>0.9 |
| PF207<br>PF207<br>PF207<br>PF207<br>PF207 | 0.6<br>1.3 |
| PF208<br>PF208<br>PF208 | 0.9<br>2.0 |

## Round flanged units pressed steel housing with rubber ring
## Set screw type

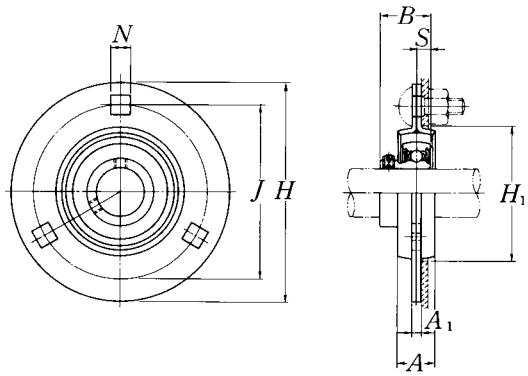


| Shaft dia. mm / inch | Unit number | Nominal dimensions mm / inch: H | J | A1 | N | A | B | S | H1 min. | Bolt size mm / inch | Max. load recommended N radial | lbf axial | Bearing number |
|---|---|---|---|---|---|---|---|---|---|---|---|---|---|
| **12** | **ASRPF201** | 90 | 71.5 | 4 | 9 | 16 | 22 | 6 | 56 | M 8 | 1 000 | 200 | AS201 |
| 1/2 | **ASRPF201-008** | 3 17/32 | 2 13/16 | 0.157 | 2 3/64 | 5/8 | 0.8661 | 0.236 | 2 13/64 | 5/16 | 220 | 40 | AS201-008 |
| **15** | **ASRPF202** | 90 | 71.5 | 4 | 9 | 16 | 22 | 6 | 56 | M 8 | 1 000 | 200 | AS202 |
| 9/16 | **ASRPF202-009** | 3 17/32 | 2 13/16 | 0.157 | 23/64 | 5/8 | 0.8661 | 0.236 | 2 13/64 | 5/16 | 220 | 40 | AS202-009 |
| 5/8 | **ASRPF202-010** | | | | | | | | | | | | AS202-010 |
| **17** | **ASRPF203** | 90 | 71.5 | 4 | 9 | 16 | 22 | 6 | 56 | M 8 | 1 000 | 200 | AS203 |
| 11/16 | **ASRPF203-011** | 3 17/32 | 2 13/16 | 0.157 | 23/64 | 5/8 | 0.8661 | 0.236 | 2 13/64 | 5/16 | 220 | 40 | AS203-011 |
| **20** | **ASRPF204** | 95 | 76 | 4 | 9 | 18 | 25 | 7 | 60 | M 8 | 1 150 | 200 | AS204 |
| 3/4 | **ASRPF204-012** | 3 3/4 | 2 63/64 | 0.157 | 23/64 | 23/32 | 0.9843 | 0.276 | 2 23/64 | 5/16 | 250 | 40 | AS204-012 |
| **25** | **ASRPF205** | 113 | 90.5 | 5.2 | 11 | 18 | 27 | 7.5 | 71 | M10 | 1 300 | 200 | AS205 |
| 13/16 | **ASRPF205-013** | | | | | | | | | | | | AS205-013 |
| 7/8 | **ASRPF205-014** | 4 7/16 | 3 9/16 | 0.205 | 7/16 | 23/32 | 1.0630 | 0.295 | 2 51/64 | 3/8 | 280 | 40 | AS205-014 |
| 15/16 | **ASRPF205-015** | | | | | | | | | | | | AS205-015 |
| **1** | **ASRPF205-100** | | | | | | | | | | | | AS205-100 |
| **30** | **ASRPF206** | 122 | 100 | 5.2 | 11 | 20 | 29 | 8 | 81 | M10 | 1 500 | 200 | AS206 |
| 1 1/16 | **ASRPF206-101** | | | | | | | | | | | | AS206-101 |
| 1 1/8 | **ASRPF206-102** | 4 13/16 | 3 15/16 | 0.205 | 7/16 | 25/32 | 1.1417 | 0.315 | 3 3/16 | 3/8 | 330 | 40 | AS206-102 |
| 1 3/16 | **ASRPF206-103** | | | | | | | | | | | | AS206-103 |
| 1 1/4 | **ASRPF206-104** | | | | | | | | | | | | AS206-104 |

Remarks: 1) The permissible load only applies in applications where the load is stable and the speed is 2400 $min^{-1}$ or less.
2) When an anti-vibration rubber ring is used, the self alignment capability will be reduce.

| Housing number | | Mass of unit |
|---|---|---|
| | | kg lb |
| rubber ring | steel | |
| R201 | PF204 | 0.2 |
| R201 | PF204 | 0.4 |
| R201 | PF204 | 0.2 |
| R201 | PF204 | 0.4 |
| R201 | PF204 | |
| R201 | PF204 | 0.2 |
| R201 | PF204 | 0.4 |
| R204 | PF205 | 0.2 |
| R204 | PF205 | 0.4 |
| R205 | PF206 | 0.3 |
| R205 | PF206 | |
| R205 | PF206 | 0.7 |
| R205 | PF206 | |
| R205 | PF206 | |
| R206 | PF207 | 0.5 |
| R206 | PF207 | |
| R206 | PF207 | 1.1 |
| R206 | PF207 | |
| R206 | PF207 | |

## Rhombus flanged units pressed steel housing
## Set screw type

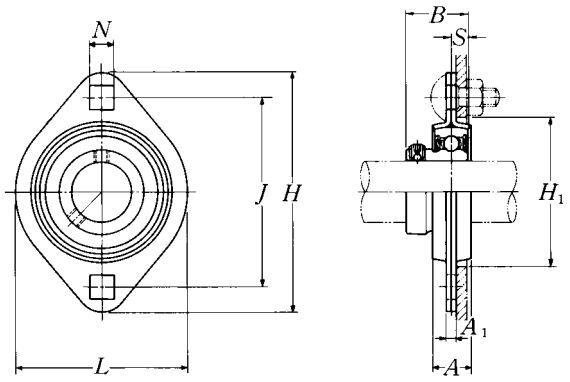


| Shaft dia. mm / inch | Unit number | Nominal dimensions mm / inch: H | J | A1 | N | A | L | B | S | H1 min. | Bolt size mm / inch | Max. load recommended N radial | lbf axial | Bearing number |
|---|---|---|---|---|---|---|---|---|---|---|---|---|---|---|
| 12 | ASPFL201 | 81 | 63.5 | 4 | 7.1 | 14 | 59 | 22 | 6 | 49 | M 6 | 2 700 | 1 350 | AS201 |
| 1/2 | ASPFL201-008 | 3 3/16 | 2 1/2 | 0.157 | 9/32 | 9/16 | 2 5/16 | 0.8661 | 0.236 | 1 59/64 | 1/4 | 600 | 300 | AS201-008 |
| 15 | ASPFL202 | 81 | 63.5 | 4 | 7.1 | 14 | 59 | 22 | 6 | 49 | M 6 | 2 700 | 1 350 | AS202 |
| 9/16 | ASPFL202-009 | 3 3/16 | 2 1/2 | 0.157 | 9/32 | 9/16 | 2 5/16 | 0.8661 | 0.236 | 1 59/64 | 1/4 | 600 | 300 | AS202-009 |
| 5/8 | ASPFL202-010 | | | | | | | | | | | | | AS202-010 |
| 17 | ASPFL203 | 81 | 63.5 | 4 | 7.1 | 14 | 59 | 22 | 6 | 49 | M 6 | 2 700 | 1 350 | AS203 |
| 11/16 | ASPFL203-011 | 3 3/16 | 2 1/2 | 0.157 | 9/32 | 9/16 | 2 5/16 | 0.8661 | 0.236 | 1 59/64 | 1/4 | 600 | 300 | AS203-011 |
| 20 | ASPFL204 | 90 | 71.5 | 4 | 9 | 16 | 67 | 25 | 7 | 56 | M 8 | 3 000 | 1 500 | AS204 |
| 3/4 | ASPFL204-012 | 3 17/32 | 2 13/16 | 0.157 | 23/64 | 5/8 | 2 5/8 | 0.9843 | 0.276 | 2 13/64 | 5/16 | 660 | 330 | AS204-012 |
| 25 | ASPFL205 | 95 | 76 | 4 | 9 | 18 | 71 | 27 | 7.5 | 60 | M 8 | 4 000 | 2 000 | AS205 |
| 13/16 | ASPFL205-013 | | | | | | | | | | | | | AS205-013 |
| 7/8 | ASPFL205-014 | 3 3/4 | 2 63/64 | 0.157 | 23/64 | 23/32 | 2 25/32 | 1.0630 | 0.295 | 2 23/64 | 5/16 | 880 | 440 | AS205-014 |
| 15/16 | ASPFL205-015 | | | | | | | | | | | | | AS205-015 |
| 1 | ASPFL205-100 | | | | | | | | | | | | | AS205-100 |
| 30 | ASPFL206 | 113 | 90.5 | 5.2 | 11 | 18 | 84 | 29 | 8 | 71 | M10 | 5 000 | 2 500 | AS206 |
| 1 1/16 | ASPFL206-101 | | | | | | | | | | | | | AS206-101 |
| 1 1/8 | ASPFL206-102 | 4 7/16 | 3 9/16 | 0.205 | 7/16 | 23/32 | 3 5/16 | 1.1417 | 0.315 | 2 51/64 | 3/8 | 1 100 | 550 | AS206-102 |
| 1 3/16 | ASPFL206-103 | | | | | | | | | | | | | AS206-103 |
| 1 1/4 | ASPFL206-104 | | | | | | | | | | | | | AS206-104 |
| 35 | ASPFL207 | 122 | 100 | 5.2 | 11 | 20 | 94 | 34 | 8.5 | 81 | M10 | 6 000 | 3 000 | AS207 |
| 1 1/4 | ASPFL207-104 | | | | | | | | | | | | | AS207-104 |
| 1 5/16 | ASPFL207-105 | 4 13/16 | 3 15/16 | 0.205 | 7/16 | 25/32 | 3 11/16 | 1.3386 | 0.335 | 3 3/16 | 3/8 | 1 300 | 650 | AS207-105 |
| 1 3/8 | ASPFL207-106 | | | | | | | | | | | | | AS207-106 |
| 1 7/16 | ASPFL207-107 | | | | | | | | | | | | | AS207-107 |
| 40 | ASPFL208 | 148 | 119 | 6.8 | 13.5 | 21 | 100 | 38 | 9 | 91 | M12 | 6 000 | 3 000 | AS208 |
| 1 1/2 | ASPFL208-108 | 5 53/64 | 4 11/16 | 0.268 | 17/32 | 53/64 | 3 15/16 | 1.4961 | 0.354 | 3 37/64 | 1/2 | 1 300 | 650 | AS208-108 |
| 1 9/16 | ASPFL208-109 | | | | | | | | | | | | | AS208-109 |

Remarks: 1) The permissible load only applies in applications where the load is stable and the speed is 2400 $min^{-1}$ or less.

| Housing number | Mass of unit kg | lb |
|---|---|---|
| PFL203 | 0.2 | |
| PFL203 | 0.4 | |
| PFL203 | 0.2 | |
| PFL203 | 0.4 | |
| PFL203 | | |
| PFL203 | 0.2 | |
| PFL203 | 0.4 | |
| PFL204 | 0.2 | |
| PFL204 | 0.4 | |
| PFL205 | 0.3 | |
| PFL205 | | |
| PFL205 | 0.7 | |
| PFL205 | | |
| PFL205 | | |
| PFL206 | 0.4 | |
| PFL206 | | |
| PFL206 | 0.9 | |
| PFL206 | | |
| PFL206 | | |
| PFL207 | 0.6 | |
| PFL207 | | |
| PFL207 | 1.3 | |
| PFL207 | | |
| PFL207 | | |
| PFL208 | 0.8 | |
| PFL208 | 1.4 | |
| PFL208 | | |

## Hanger units cast housing
## Set screw type

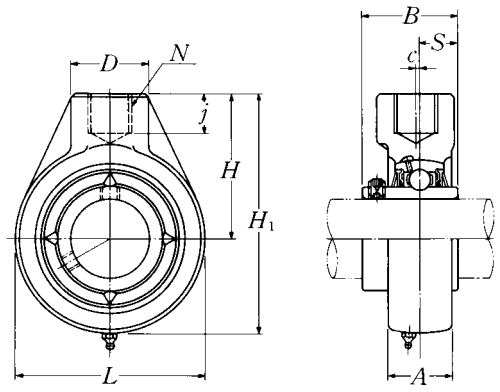


| Shaft dia. mm / inch | Unit number [1] | Nominal dimensions mm / inch L | H1 | c | A | H | N | D | j | B | S | Bearing number |
|---|---|---|---|---|---|---|---|---|---|---|---|---|
| 12 | UCHB201D1 | 64 | 96 | 0 | 21 | 64 | RP3/4 | 40 | 19 | 31 | 12.7 | UC201D1 |
| 1/2 | UCHB201-008D1 | 2 17/32 | 3 25/32 | 0 | 13/16 | 2 33/64 | RP3/4 | 1 9/16 | 3/4 | 1.2205 | 0.500 | UC201-008D1 |
| 15 | UCHB202D1 | 64 | 96 | 0 | 21 | 64 | RP3/4 | 40 | 19 | 31 | 12.7 | UC202D1 |
| 9/16 | UCHB202-009D1 | 2 17/32 | 3 25/32 | 0 | 13/16 | 2 33/64 | RP3/4 | 1 9/16 | 3/4 | 1.2205 | 0.500 | UC202-009D1 |
| 5/8 | UCHB202-010D1 | | | | | | | | | | | UC202-010D1 |
| 17 | UCHB203D1 | 64 | 96 | 0 | 21 | 64 | RP3/4 | 40 | 19 | 31 | 12.7 | UC203D1 |
| 11/16 | UCHB203-011D1 | 2 17/32 | 3 25/32 | 0 | 13/16 | 2 33/64 | RP3/4 | 1 9/16 | 3/4 | 1.2205 | 0.500 | UC203-011D1 |
| 20 | UCHB204D1 | 64 | 96 | 0 | 21 | 64 | RP3/4 | 40 | 19 | 31 | 12.7 | UC204D1 |
| 3/4 | UCHB204-012D1 | 2 17/32 | 3 25/32 | 0 | 13/16 | 2 33/64 | RP3/4 | 1 9/16 | 3/4 | 1.2205 | 0.500 | UC204-012D1 |
| 25 | UCHB205D1 | 78 | 103 | 0 | 24 | 64 | RP3/4 | 40 | 19 | 34.1 | 14.3 | UC205D1 |
| 13/16 | UCHB205-013D1 | | | | | | | | | | | UC205-013D1 |
| 7/8 | UCHB205-014D1 | 3 1/16 | 4 1/16 | 0 | 15/16 | 2 33/64 | RP3/4 | 1 9/16 | 3/4 | 1.3425 | 0.563 | UC205-014D1 |
| 15/16 | UCHB205-015D1 | | | | | | | | | | | UC205-015D1 |
| 1 | UCHB205-100D1 | | | | | | | | | | | UC205-100D1 |
| 30 | UCHB206D1 | 78 | 103 | 0 | 28 | 64 | RP3/4 | 40 | 19 | 38.1 | 15.9 | UC206D1 |
| 1 1/16 | UCHB206-101D1 | | | | | | | | | | | UC206-101D1 |
| 1 1/8 | UCHB206-102D1 | 3 1/16 | 4 1/16 | 0 | 1 3/32 | 2 33/64 | RP3/4 | 1 9/16 | 3/4 | 1.5000 | 0.626 | UC206-102D1 |
| 1 3/16 | UCHB206-103D1 | | | | | | | | | | | UC206-103D1 |
| 1 1/4 | UCHB206-104D1 | | | | | | | | | | | UC206-104D1 |
| 35 | UCHB207D1 | 92 | 116 | 0 | 30 | 70 | RP3/4 | 40 | 19 | 42.9 | 17.5 | UC207D1 |
| 1 1/4 | UCHB207-104D1 | | | | | | | | | | | UC207-104D1 |
| 1 5/16 | UCHB207-105D1 | 3 5/8 | 4 9/16 | 0 | 1 3/16 | 2 3/4 | RP3/4 | 1 9/16 | 3/4 | 1.6890 | 0.689 | UC207-105D1 |
| 1 3/8 | UCHB207-106D1 | | | | | | | | | | | UC207-106D1 |
| 1 7/16 | UCHB207-107D1 | | | | | | | | | | | UC207-107D1 |
| 40 | UCHB208D1 | 96 | 121 | 2 | 33 | 73 | RP3/4 | 40 | 19 | 49.2 | 19 | UC208D1 |
| 1 1/2 | UCHB208-108D1 | 3 25/32 | 4 3/4 | 3/32 | 1 5/16 | 2 7/8 | RP3/4 | 1 9/16 | 3/4 | 1.9370 | 0.748 | UC208-108D1 |
| 1 9/16 | UCHB208-109D1 | | | | | | | | | | | UC208-109D1 |
| 45 | UCHB209D1 | 108 | 136 | 5 | 35 | 82 | RP1 | 48 | 21 | 49.2 | 19 | UC209D1 |
| 1 5/8 | UCHB209-110D1 | | | | | | | | | | | UC209-110D1 |
| 1 11/16 | UCHB209-111D1 | 4 1/4 | 5 11/32 | 3/16 | 1 3/8 | 3 15/64 | RP1 | 1 7/8 | 13/16 | 1.9370 | 0.748 | UC209-111D1 |
| 1 3/4 | UCHB209-112D1 | | | | | | | | | | | UC209-112D1 |

Remarks: 1) These numbers indicate relubricatable type. If maintenance free type is needed, please order without suffix "D1".
Note: Please refer to page 36 for size of grease fitting.

| Housing [1] number | Mass of unit kg | lb |
|---|---|---|
| HB204D1 | 1.0 | |
| HB204D1 | 2.2 | |
| HB204D1 | 0.9 | |
| HB204D1 | 2.0 | |
| HB204D1 | | |
| HB204D1 | 0.9 | |
| HB204D1 | 2.0 | |
| HB204D1 | 0.9 | |
| HB204D1 | 2.0 | |
| HB205D1 | 0.9 | |
| HB205D1 | | |
| HB205D1 | 2.0 | |
| HB205D1 | | |
| HB205D1 | | |
| HB206D1 | 0.8 | |
| HB206D1 | | |
| HB206D1 | 1.8 | |
| HB206D1 | | |
| HB206D1 | | |
| HB207D1 | 1.2 | |
| HB207D1 | | |
| HB207D1 | 2.7 | |
| HB207D1 | | |
| HB207D1 | | |
| HB208D1 | 1.3 | |
| HB208D1 | 2.9 | |
| HB208D1 | | |
| HB209D1 | 1.8 | |
| HB209D1 | | |
| HB209D1 | 4.0 | |
| HB209D1 | | |

| Nominal Designation of Thread | Nominal dimensions mm | | |
|---|---|---|---|
| | Major Diameter of Internal Thread | Pitch Diameter | Minor Diameter of Internal Thread |
| Rp3/4 (PS3/4) | 26.441 | 25.279 | 24.117 |
| Rp1(PS1) | 33.249 | 31.770 | 30.291 |
| Rp1 1/4 (PS1 1/4) | 41.910 | 40.431 | 38.952 |
| Rp1 1/2 (PS1 1/2) | 47.803 | 46.324 | 44.845 |

## Hanger units cast housing
## Set screw type

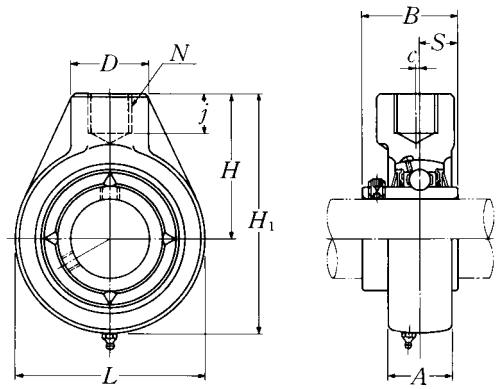


| Shaft dia. mm / inch | Unit number [1] | Nominal dimensions L | H1 | c | A | H (mm) | N (inch) | D | j | B | S | Bearing number |
|---|---|---|---|---|---|---|---|---|---|---|---|---|
| 50 | UCHB210D1 | 118 | 142 | 5 | 37 | 83 | RP1 | 48 | 21 | 51.6 | 19 | UC210D1 |
| 1 13/16 | UCHB210-113D1 | | | | | | | | | | | UC210-113D1 |
| 1 7/8 | UCHB210-114D1 | 4 21/32 | 5 19/32 | 3/16 | 1 15/32 | 3 17/64 | RP1 | 1 7/8 | 13/16 | 2.0315 | 0.748 | UC210-114D1 |
| 1 15/16 | UCHB210-115D1 | | | | | | | | | | | UC210-115D1 |
| 2 | UCHB210-200D1 | | | | | | | | | | | UC210-200D1 |
| 55 | UCHB211D1 | 126 | 158 | 7 | 38 | 95 | RP1 1/4 | 60 | 25 | 55.6 | 22.2 | UC211D1 |
| 2 | UCHB211-200D1 | | | | | | | | | | | UC211-200D1 |
| 2 1/16 | UCHB211-201D1 | 4 31/32 | 6 7/32 | 9/32 | 1 1/2 | 3 47/64 | RP1 1/4 | 2 3/8 | 31/32 | 2.1890 | 0.874 | UC211-201D1 |
| 2 1/8 | UCHB211-202D1 | | | | | | | | | | | UC211-202D1 |
| 2 3/16 | UCHB211-203D1 | | | | | | | | | | | UC211-203D1 |
| 60 | UCHB212D1 | 142 | 173 | 9 | 42 | 102 | RP1 1/4 | 60 | 28 | 65.1 | 25.4 | UC212D1 |
| 2 1/4 | UCHB212-204D1 | | | | | | | | | | | UC212-204D1 |
| 2 5/16 | UCHB212-205D1 | 5 19/32 | 6 13/16 | 11/32 | 1 21/32 | 4 1/64 | RP1 1/4 | 2 3/8 | 1 3/32 | 2.5630 | 1.000 | UC212-205D1 |
| 2 3/8 | UCHB212-206D1 | | | | | | | | | | | UC212-206D1 |
| 2 7/16 | UCHB212-207D1 | | | | | | | | | | | UC212-207D1 |
| 65 | UCHB213D1 | 166 | 200 | 9.5 | 44 | 117 | RP1 1/2 | 70 | 32 | 65.1 | 25.4 | UC213D1 |
| 2 1/2 | UCHB213-208D1 | 6 17/32 | 7 7/8 | 3/8 | 1 23/32 | 4 39/64 | RP1 1/2 | 2 3/4 | 1 1/4 | 2.5630 | 1.000 | UC213-208D1 |

Remarks: 1) These numbers indicate relubricatable type. If maintenance free type is needed, please order without suffix "D1".
Note: Please refer to page 36 for size of grease fitting.

| Housing [1)] number | Mass of unit kg | lb |
|---|---|---|
| HB210D1 | 2.2 | |
| HB210D1 | | |
| HB210D1 | 4.9 | |
| HB210D1 | | |
| HB210D1 | | |
| HB211D1 | 2.8 | |
| HB211D1 | | |
| HB211D1 | 6.2 | |
| HB211D1 | | |
| HB211D1 | | |
| HB212D1 | 3.7 | |
| HB212D1 | | |
| HB212D1 | 8.2 | |
| HB212D1 | | |
| HB212D1 | | |
| HB213D1 | 5.7 | |
| HB213D1 | 12.6 | |

| Nominal Designation of Thread | Nominal dimensions mm | | |
|---|---|---|---|
| | Major Diameter of Internal Thread | Pitch Diameter | Minor Diameter of Internal Thread |
| Rp3/4 (PS3/4) | 26.441 | 25.279 | 24.117 |
| Rp1(PS1) | 33.249 | 31.770 | 30.291 |
| Rp1 1/4 (PS1 1/4) | 41.910 | 40.431 | 38.952 |
| Rp1 1/2 (PS1 1/2) | 47.803 | 46.324 | 44.845 |

## Take-up units cast housing
## Set screw type

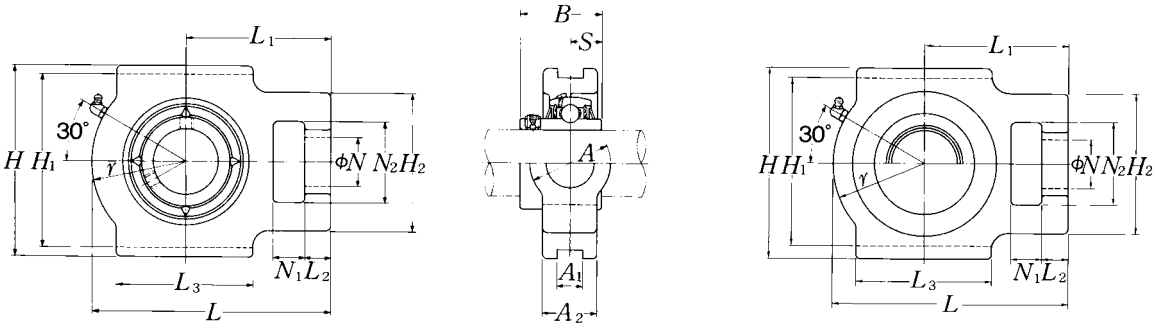


**Pressed steel dust cover type**
Open end: **S-UCT···D1**
Closed end: **SM-UCT···D1**

| Shaft dia. mm / inch | Unit number [1] | Nominal dimensions (mm / inch) $N_1$ | $L_2$ | $H_2$ | $N_2$ | $N$ | $L_3$ | $A_1$ | $H_1$ | $H$ | $L$ | $A_2$ | $A$ | $r$ | $L_1$ | $B$ | $S$ |
|---|---|---|---|---|---|---|---|---|---|---|---|---|---|---|---|---|---|
| 12 | UCT201D1 | 16 | 12 | 51 | 32 | 19 | 51 | 12 | 76 | 89 | 94 | 21 | 32 | 33 | 61 | 31 | 12.7 |
| 1/2 | UCT201-008D1 | 5/8 | 15/32 | 2 | 1 1/4 | 3/4 | 2 | 0.472 | 2 63/64 | 3 1/2 | 3 11/16 | 13/16 | 1 1/4 | 1 5/16 | 2 13/32 | 1.2205 | 0.500 |
| 15 | UCT202D1 | 16 | 12 | 51 | 32 | 19 | 51 | 12 | 76 | 89 | 94 | 21 | 32 | 33 | 61 | 31 | 12.7 |
| 9/16 | UCT202-009D1 | 5/8 | 15/32 | 2 | 1 1/4 | 3/4 | 2 | 0.472 | 2 63/64 | 3 1/2 | 3 11/16 | 13/16 | 1 1/4 | 1 5/16 | 2 13/32 | 1.2205 | 0.500 |
| 5/8 | UCT202-010D1 | | | | | | | | | | | | | | | | |
| 17 | UCT203D1 | 16 | 12 | 51 | 32 | 19 | 51 | 12 | 76 | 89 | 94 | 21 | 32 | 33 | 61 | 31 | 12.7 |
| 11/16 | UCT203-011D1 | 5/8 | 15/32 | 2 | 1 1/4 | 3/4 | 2 | 0.472 | 2 63/64 | 3 1/2 | 3 11/16 | 13/16 | 1 1/4 | 1 5/16 | 2 13/32 | 1.2205 | 0.500 |
| 20 | UCT204D1 | 16 | 12 | 51 | 32 | 19 | 51 | 12 | 76 | 89 | 94 | 21 | 32 | 33 | 61 | 31 | 12.7 |
| 3/4 | UCT204-012D1 | 5/8 | 15/32 | 2 | 1 1/4 | 3/4 | 2 | 0.472 | 2 63/64 | 3 1/2 | 3 11/16 | 13/16 | 1 1/4 | 1 5/16 | 2 13/32 | 1.2205 | 0.500 |
| 25 | UCT205D1 | 16 | 12 | 51 | 32 | 19 | 51 | 12 | 76 | 89 | 97 | 24 | 32 | 35 | 62 | 34.1 | 14.3 |
| 13/16 | UCT205-013D1 | | | | | | | | | | | | | | | | |
| 7/8 | UCT205-014D1 | 5/8 | 15/32 | 2 | 1 1/4 | 3/4 | 2 | 0.472 | 2 63/64 | 3 1/2 | 3 13/16 | 15/16 | 1 1/4 | 1 3/8 | 2 7/16 | 1.3425 | 0.563 |
| 15/16 | UCT205-015D1 | | | | | | | | | | | | | | | | |
| 1 | UCT205-100D1 | | | | | | | | | | | | | | | | |
| 30 | UCT206D1 | 16 | 12 | 56 | 37 | 22 | 57 | 12 | 89 | 102 | 113 | 28 | 37 | 43 | 70 | 38.1 | 15.9 |
| 1 1/16 | UCT206-101D1 | | | | | | | | | | | | | | | | |
| 1 1/8 | UCT206-102D1 | 5/8 | 15/32 | 2 7/32 | 1 15/32 | 7/8 | 2 1/4 | 0.472 | 3 1/2 | 4 1/32 | 4 7/16 | 1 3/32 | 1 15/32 | 1 11/16 | 2 3/4 | 1.5000 | 0.626 |
| 1 3/16 | UCT206-103D1 | | | | | | | | | | | | | | | | |
| 1 1/4 | UCT206-104D1 | | | | | | | | | | | | | | | | |
| 35 | UCT207D1 | 16 | 15 | 64 | 37 | 22 | 64 | 12 | 89 | 102 | 129 | 30 | 37 | 51 | 78 | 42.9 | 17.5 |
| 1 1/4 | UCT207-104D1 | | | | | | | | | | | | | | | | |
| 1 5/16 | UCT207-105D1 | 5/8 | 19/32 | 2 17/32 | 1 15/32 | 7/8 | 2 17/32 | 0.472 | 3 1/2 | 4 1/32 | 5 3/32 | 1 3/16 | 1 15/32 | 2 | 3 1/16 | 1.6890 | 0.689 |
| 1 3/8 | UCT207-106D1 | | | | | | | | | | | | | | | | |
| 1 7/16 | UCT207-107D1 | | | | | | | | | | | | | | | | |
| 40 | UCT208D1 | 19 | 18 | 83 | 49 | 29 | 83 | 16 | 102 | 114 | 144 | 33 | 49 | 56 | 88 | 49.2 | 19 |
| 1 1/2 | UCT208-108D1 | 3/4 | 23/32 | 3 9/32 | 1 15/16 | 1 5/32 | 3 9/32 | 0.630 | 4 1/64 | 4 1/2 | 5 21/32 | 1 5/16 | 1 15/16 | 2 7/32 | 3 15/32 | 1.9370 | 0.748 |
| 1 9/16 | UCT208-109D1 | | | | | | | | | | | | | | | | |
| 45 | UCT209D1 | 19 | 18 | 83 | 49 | 29 | 83 | 16 | 102 | 117 | 145 | 35 | 49 | 57 | 88 | 49.2 | 19 |
| 1 5/8 | UCT209-110D1 | | | | | | | | | | | | | | | | |
| 1 11/16 | UCT209-111D1 | 3/4 | 23/32 | 3 9/32 | 1 15/16 | 1 5/32 | 3 9/32 | 0.630 | 4 1/64 | 4 19/32 | 5 23/32 | 1 3/8 | 1 15/16 | 2 1/4 | 3 15/32 | 1.9370 | 0.748 |
| 1 3/4 | UCT209-112D1 | | | | | | | | | | | | | | | | |

Remarks: 1) These numbers indicate relubricatable type. If maintenance free type is needed, please order without suffix "D1".
Note: Please refer to page 36 for size of grease fitting.

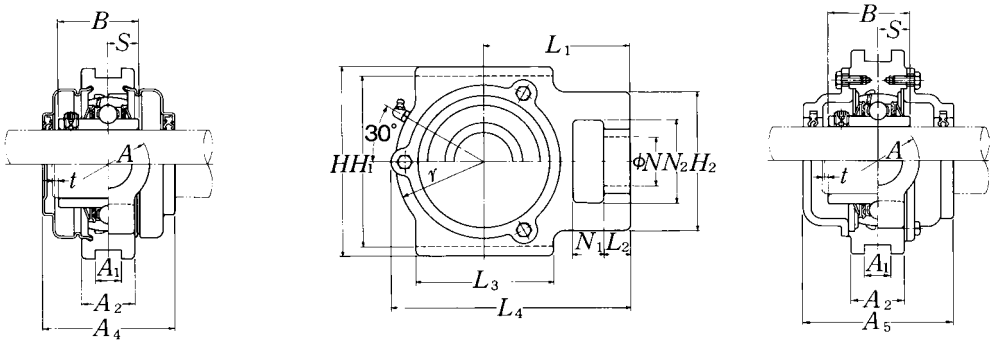


**Cast dust cover type**
Open end: **C-UCT···D1**
Closed end: **CM-UCT···D1**

| Bearing number | Housing number [1] | Unit number [1] pressed steel dust cover type | Unit number [1] cast dust cover type | Nominal dimensions mm / inch: $t$ max. | $A_4$ | $L_4$ | $A_5$ | Mass of unit kg / lb: UCT | S(SM) | C(CM) |
|---|---|---|---|---|---|---|---|---|---|---|
| UC201D1 | T204D1 | S(SM)-UCT201D1 | C(CM)-UCT201D1 | 2 | 51 | 97 | 62 | 0.6 | 0.8 | 1.1 |
| UC201-008D1 | T204D1 | S(SM)-UCT201-008D1 | C(CM)-UCT201-008D1 | 5/64 | 2 | 3 13/16 | 2 7/16 | 1.3 | 1.8 | 2.4 |
| UC202D1 | T204D1 | S(SM)-UCT202D1 | C(CM)-UCT202D1 | 2 | 51 | 97 | 62 | 0.6 | 0.8 | 1.1 |
| UC202-009D1 | T204D1 | S(SM)-UCT202-009D1 | C(CM)-UCT202-009D1 | 5/64 | 2 | 3 13/16 | 2 7/16 | 1.3 | 1.8 | 2.4 |
| UC202-010D1 | T204D1 | S(SM)-UCT202-010D1 | C(CM)-UCT202-010D1 | | | | | | | |
| UC203D1 | T204D1 | S(SM)-UCT203D1 | C(CM)-UCT203D1 | 2 | 51 | 97 | 62 | 0.6 | 0.8 | 1.0 |
| UC203-011D1 | T204D1 | S(SM)-UCT203-011D1 | C(CM)-UCT203-011D1 | 5/64 | 2 | 3 13/16 | 2 7/16 | 1.3 | 1.8 | 2.2 |
| UC204D1 | T204D1 | S(SM)-UCT204D1 | C(CM)-UCT204D1 | 2 | 51 | 97 | 62 | 0.6 | 0.8 | 1.0 |
| UC204-012D1 | T204D1 | S(SM)-UCT204-012D1 | C(CM)-UCT204-012D1 | 5/64 | 2 | 3 13/16 | 2 7/16 | 1.3 | 1.8 | 2.2 |
| UC205D1 | T205D1 | S(SM)-UCT205D1 | C(CM)-UCT205D1 | 2 | 57 | 100.5 | 70 | 0.8 | 0.9 | 1.1 |
| UC205-013D1 | T205D1 | S(SM)-UCT205-013D1 | C(CM)-UCT205-013D1 | | | | | | | |
| UC205-014D1 | T205D1 | S(SM)-UCT205-014D1 | C(CM)-UCT205-014D1 | 5/64 | 2 1/4 | 3 31/32 | 2 3/4 | 1.8 | 2.0 | 2.4 |
| UC205-015D1 | T205D1 | S(SM)-UCT205-015D1 | C(CM)-UCT205-015D1 | | | | | | | |
| UC205-100D1 | T205D1 | S(SM)-UCT205-100D1 | C(CM)-UCT205-100D1 | | | | | | | |
| UC206D1 | T206D1 | S(SM)-UCT206D1 | C(CM)-UCT206D1 | 2 | 62 | 113.5 | 75 | 1.3 | 1.3 | 1.7 |
| UC206-101D1 | T206D1 | S(SM)-UCT206-101D1 | C(CM)-UCT206-101D1 | | | | | | | |
| UC206-102D1 | T206D1 | S(SM)-UCT206-102D1 | C(CM)-UCT206-102D1 | 5/64 | 2 7/16 | 4 15/32 | 2 15/16 | 2.9 | 2.9 | 3.8 |
| UC206-103D1 | T206D1 | S(SM)-UCT206-103D1 | C(CM)-UCT206-103D1 | | | | | | | |
| UC206-104D1 | T206D1 | S(SM)-UCT206-104D1 | C(CM)-UCT206-104D1 | | | | | | | |
| UC207D1 | T207D1 | S(SM)-UCT207D1 | C(CM)-UCT207D1 | 3 | 72 | 129 | 80 | 1.6 | 1.7 | 2.1 |
| UC207-104D1 | T207D1 | S(SM)-UCT207-104D1 | C(CM)-UCT207-104D1 | | | | | | | |
| UC207-105D1 | T207D1 | S(SM)-UCT207-105D1 | C(CM)-UCT207-105D1 | 1/8 | 2 27/32 | 5 3/32 | 3 5/32 | 3.5 | 3.7 | 4.6 |
| UC207-106D1 | T207D1 | S(SM)-UCT207-106D1 | C(CM)-UCT207-106D1 | | | | | | | |
| UC207-107D1 | T207D1 | S(SM)-UCT207-107D1 | C(CM)-UCT207-107D1 | | | | | | | |
| UC208D1 | T208D1 | S(SM)-UCT208D1 | C(CM)-UCT208D1 | 3 | 82 | 144 | 90 | 2.4 | 2.5 | 3.1 |
| UC208-108D1 | T208D1 | S(SM)-UCT208-108D1 | C(CM)-UCT208-108D1 | 1/8 | 3 7/32 | 5 21/32 | 3 17/32 | 5.3 | 5.5 | 6.8 |
| UC208-109D1 | T208D1 | S(SM)-UCT208-109D1 | C(CM)-UCT208-109D1 | | | | | | | |
| UC209D1 | T209D1 | S(SM)-UCT209D1 | C(CM)-UCT209D1 | 3 | 82 | 145.5 | 95 | 2.4 | 2.5 | 3.3 |
| UC209-110D1 | T209D1 | S(SM)-UCT209-110D1 | C(CM)-UCT209-110D1 | | | | | | | |
| UC209-111D1 | T209D1 | S(SM)-UCT209-111D1 | C(CM)-UCT209-111D1 | 1/8 | 3 7/32 | 5 23/32 | 3 3/4 | 5.3 | 5.5 | 7.3 |
| UC209-112D1 | T209D1 | S(SM)-UCT209-112D1 | C(CM)-UCT209-112D1 | | | | | | | |

## Take-up units cast housing
## Set screw type

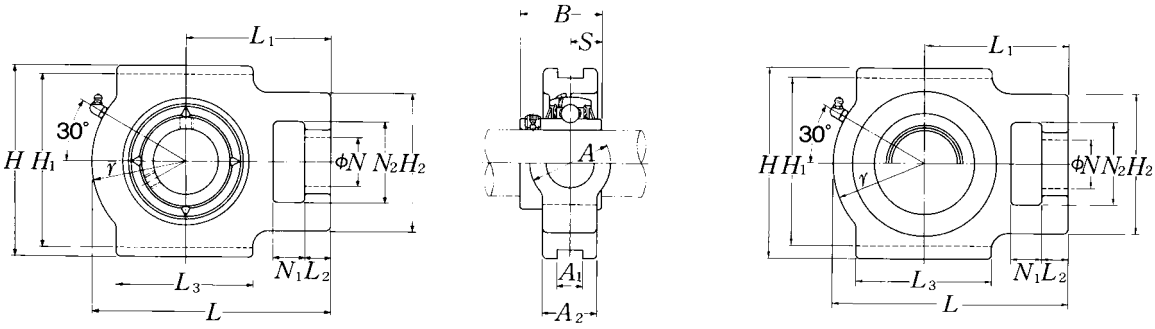


**Pressed steel dust cover type**
Open end: **S-UCT···D1**
Closed end: **SM-UCT···D1**

| Shaft dia. mm / inch | Unit number [1] | Nominal dimensions (mm / inch) $N_1$ | $L_2$ | $H_2$ | $N_2$ | $N$ | $L_3$ | $A_1$ | $H_1$ | $H$ | $L$ | $A_2$ | $A$ | $r$ | $L_1$ | $B$ | $S$ |
|---|---|---|---|---|---|---|---|---|---|---|---|---|---|---|---|---|---|
| **50** | **UCT210D1** | 19 | 18 | 83 | 49 | 29 | 86 | 16 | 102 | 117 | 151 | 37 | 49 | 59 | 92 | 51.6 | 19 |
| **1 13/16** | **UCT210-113D1** | | | | | | | | | | | | | | | | |
| **1 7/8** | **UCT210-114D1** | 3/4 | 23/32 | 3 9/32 | 1 15/16 | 1 5/32 | 3 3/8 | 0.630 | 4 1/64 | 4 19/32 | 5 15/16 | 1 15/32 | 1 15/16 | 2 5/16 | 3 5/8 | 2.0315 | 0.748 |
| **1 15/16** | **UCT210-115D1** | | | | | | | | | | | | | | | | |
| **2** | **UCT210-200D1** | | | | | | | | | | | | | | | | |
| **55** | **UCT211D1** | 25 | 21 | 102 | 64 | 35 | 95 | 22 | 130 | 146 | 171 | 38 | 64 | 65 | 106 | 55.6 | 22.2 |
| **2** | **UCT211-200D1** | | | | | | | | | | | | | | | | |
| **2 1/16** | **UCT211-201D1** | 31/32 | 13/16 | 4 1/32 | 2 17/32 | 1 3/8 | 3 3/4 | 0.866 | 5 1/8 | 5 3/4 | 6 23/32 | 1 1/2 | 2 17/32 | 2 9/16 | 4 3/16 | 2.1890 | 0.874 |
| **2 1/8** | **UCT211-202D1** | | | | | | | | | | | | | | | | |
| **2 3/16** | **UCT211-203D1** | | | | | | | | | | | | | | | | |
| **60** | **UCT212D1** | 32 | 21 | 102 | 64 | 35 | 102 | 22 | 130 | 146 | 194 | 42 | 64 | 75 | 119 | 65.1 | 25.4 |
| **2 1/4** | **UCT212-204D1** | | | | | | | | | | | | | | | | |
| **2 5/16** | **UCT212-205D1** | 1 1/4 | 13/16 | 4 1/32 | 2 17/32 | 1 3/8 | 4 1/32 | 0.866 | 5 1/8 | 5 3/4 | 7 5/8 | 1 21/32 | 2 17/32 | 2 15/16 | 4 11/16 | 2.5630 | 1.000 |
| **2 3/8** | **UCT212-206D1** | | | | | | | | | | | | | | | | |
| **2 7/16** | **UCT212-207D1** | | | | | | | | | | | | | | | | |
| **65** | **UCT213D1** | 32 | 23 | 111 | 70 | 41 | 121 | 26 | 151 | 167 | 224 | 44 | 70 | 87 | 137 | 65.1 | 25.4 |
| **2 1/2** | **UCT213-208D1** | 1 1/4 | 29/32 | 4 3/8 | 2 3/4 | 1 5/8 | 4 3/4 | 1.024 | 5 15/16 | 6 9/16 | 8 13/16 | 1 23/32 | 2 3/4 | 3 7/16 | 5 13/32 | 2.5630 | 1.000 |
| **2 9/16** | **UCT213-209D1** | | | | | | | | | | | | | | | | |
| **70** | **UCT214D1** | 32 | 23 | 111 | 70 | 41 | 121 | 26 | 151 | 167 | 224 | 46 | 70 | 87 | 137 | 74.6 | 30.2 |
| **2 5/8** | **UCT214-210D1** | | | | | | | | | | | | | | | | |
| **2 11/16** | **UCT214-211D1** | 1 1/4 | 29/32 | 4 3/8 | 2 3/4 | 1 5/8 | 4 3/4 | 1.024 | 5 15/16 | 6 9/16 | 8 13/16 | 1 13/16 | 2 3/4 | 3 7/16 | 5 13/32 | 2.9370 | 1.189 |
| **2 3/4** | **UCT214-212D1** | | | | | | | | | | | | | | | | |
| **75** | **UCT215D1** | 32 | 23 | 111 | 70 | 41 | 121 | 26 | 151 | 167 | 232 | 48 | 70 | 92 | 140 | 77.8 | 33.3 |
| **2 13/16** | **UCT215-213D1** | | | | | | | | | | | | | | | | |
| **2 7/8** | **UCT215-214D1** | 1 1/4 | 29/32 | 4 3/8 | 2 3/4 | 1 5/8 | 4 3/4 | 1.024 | 5 15/16 | 6 9/16 | 9 1/8 | 1 7/8 | 2 3/4 | 3 5/8 | 5 1/2 | 3.0630 | 1.311 |
| **2 15/16** | **UCT215-215D1** | | | | | | | | | | | | | | | | |
| **3** | **UCT215-300D1** | | | | | | | | | | | | | | | | |
| **80** | **UCT216D1** | 32 | 23 | 111 | 70 | 41 | 121 | 26 | 165 | 184 | 235 | 51 | 70 | 95 | 140 | 82.6 | 33.3 |
| **3 1/16** | **UCT216-301D1** | | | | | | | | | | | | | | | | |
| **3 1/8** | **UCT216-302D1** | 1 1/4 | 29/32 | 4 3/8 | 2 3/4 | 1 5/8 | 4 3/4 | 1.024 | 6 1/2 | 7 1/4 | 9 1/4 | 2 | 2 3/4 | 3 3/4 | 5 1/2 | 3.2520 | 1.311 |
| **3 3/16** | **UCT216-303D1** | | | | | | | | | | | | | | | | |

Remarks: 1) These numbers indicate relubricatable type. If maintenance free type is needed, please order without suffix "D1".
Note: Please refer to page 36 for size of grease fitting.

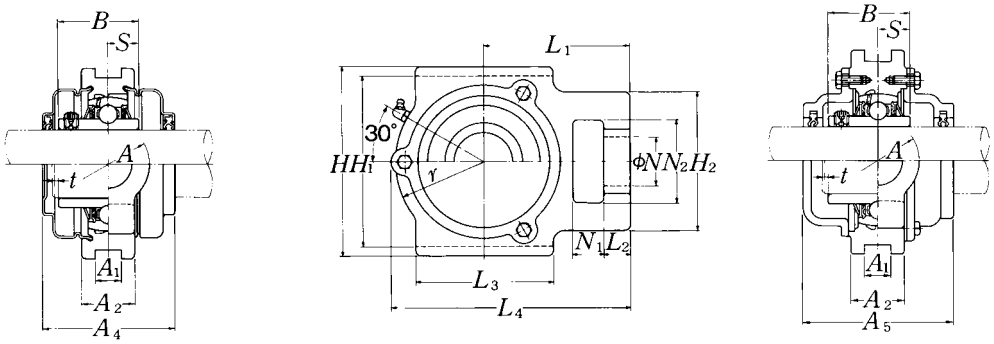


**Cast dust cover type**
Open end: **C-UCT···D1**
Closed end: **CM-UCT···D1**

| Bearing number | Housing [1] number | Unit number [1] pressed steel dust cover type | Unit number [1] cast dust cover type | Nominal dimensions mm / inch: $t$ max. | $A_4$ | $L_4$ | $A_5$ | Mass of unit kg / lb: UCT | S(SM) | C(CM) |
|---|---|---|---|---|---|---|---|---|---|---|
| UC210D1 | T210D1 | S(SM)-UCT210D1 | C(CM)-UCT210D1 | 3 | 87 | 152 | 100 | 2.6 | 2.7 | 3.6 |
| UC210-113D1 | T210D1 | S(SM)-UCT210-113D1 | C(CM)-UCT210-113D1 | | | | | | | |
| UC210-114D1 | T210D1 | S(SM)-UCT210-114D1 | C(CM)-UCT210-114D1 | 1/8 | 3 7/16 | 5 31/32 | 3 15/16 | 5.7 | 6.0 | 7.9 |
| UC210-115D1 | T210D1 | S(SM)-UCT210-115D1 | C(CM)-UCT210-115D1 | | | | | | | |
| UC210-200D1 | T210D1 | S(SM)-UCT210-200D1 | C(CM)-UCT210-200D1 | | | | | | | |
| UC211D1 | T211D1 | S(SM)-UCT211D1 | C(CM)-UCT211D1 | 4 | 92 | 171.5 | 100 | 3.9 | 4.1 | 5.0 |
| UC211-200D1 | T211D1 | S(SM)-UCT211-200D1 | C(CM)-UCT211-200D1 | | | | | | | |
| UC211-201D1 | T211D1 | S(SM)-UCT211-201D1 | C(CM)-UCT211-201D1 | 5/32 | 3 5/8 | 6 3/4 | 3 15/16 | 8.6 | 9.0 | 11 |
| UC211-202D1 | T211D1 | S(SM)-UCT211-202D1 | C(CM)-UCT211-202D1 | | | | | | | |
| UC211-203D1 | T211D1 | S(SM)-UCT211-203D1 | C(CM)-UCT211-203D1 | | | | | | | |
| UC212D1 | T212D1 | S(SM)-UCT212D1 | C(CM)-UCT212D1 | 4 | 102 | 194 | 115 | 4.8 | 5.1 | 6.1 |
| UC212-204D1 | T212D1 | S(SM)-UCT212-204D1 | C(CM)-UCT212-204D1 | | | | | | | |
| UC212-205D1 | T212D1 | S(SM)-UCT212-205D1 | C(CM)-UCT212-205D1 | 5/32 | 4 1/32 | 7 5/8 | 4 17/32 | 11 | 11 | 13 |
| UC212-206D1 | T212D1 | S(SM)-UCT212-206D1 | C(CM)-UCT212-206D1 | | | | | | | |
| UC212-207D1 | T212D1 | S(SM)-UCT212-207D1 | C(CM)-UCT212-207D1 | | | | | | | |
| UC213D1 | T213D1 | S(SM)-UCT213D1 | C(CM)-UCT213D1 | 4 | 107 | 224 | 120 | 7.0 | 7.3 | 8.4 |
| UC213-208D1 | T213D1 | S(SM)-UCT213-208D1 | C(CM)-UCT213-208D1 | 5/32 | 4 7/32 | 8 13/16 | 4 23/32 | 15 | 16 | 19 |
| UC213-209D1 | T213D1 | S(SM)-UCT213-209D1 | C(CM)-UCT213-209D1 | | | | | | | |
| UC214D1 | T214D1 | — | C(CM)-UCT214D1 | 4 | — | 224 | 135 | 7.0 | — | 9.1 |
| UC214-210D1 | T214D1 | | C(CM)-UCT214-210D1 | | | | | | | |
| UC214-211D1 | T214D1 | — | C(CM)-UCT214-211D1 | 5/32 | — | 8 13/16 | 5 5/16 | 15 | — | 20 |
| UC214-212D1 | T214D1 | | C(CM)-UCT214-212D1 | | | | | | | |
| UC215D1 | T215D1 | — | C(CM)-UCT215D1 | 4 | — | 232 | 135 | 7.4 | — | 9.8 |
| UC215-213D1 | T215D1 | | C(CM)-UCT215-213D1 | | | | | | | |
| UC215-214D1 | T215D1 | — | C(CM)-UCT215-214D1 | 5/32 | — | 9 1/8 | 5 5/16 | 16 | — | 22 |
| UC215-215D1 | T215D1 | | C(CM)-UCT215-215D1 | | | | | | | |
| UC215-300D1 | T215D1 | | C(CM)-UCT215-300D1 | | | | | | | |
| UC216D1 | T216D1 | — | C(CM)-UCT216D1 | 4 | — | 235 | 145 | 8.2 | — | 11 |
| UC216-301D1 | T216D1 | | C(CM)-UCT216-301D1 | | | | | | | |
| UC216-302D1 | T216D1 | — | C(CM)-UCT216-302D1 | 5/32 | — | 9 1/4 | 5 23/32 | 18 | — | 24 |
| UC216-303D1 | T216D1 | | C(CM)-UCT216-303D1 | | | | | | | |

## Take-up units cast housing
## Set screw type

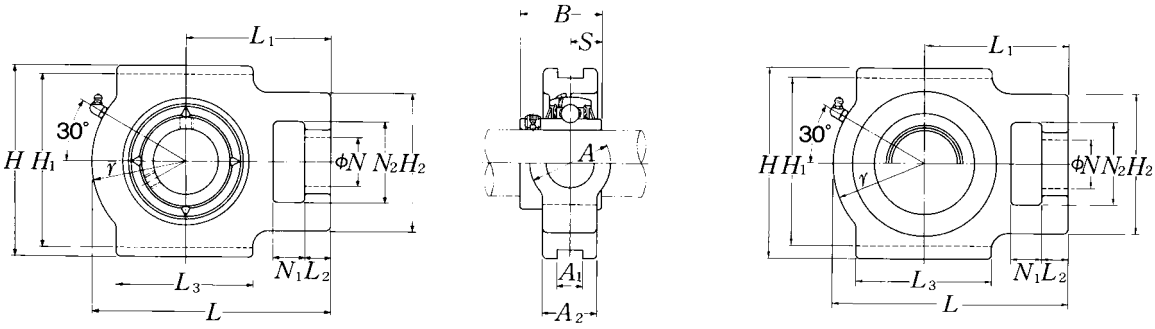


**Pressed steel dust cover type**
Open end: **S-UCT···D1**
Closed end: **SM-UCT···D1**

| Shaft dia. mm / inch | Unit number [1] | Nominal dimensions | | | | | | | | | | | | | | | |
|---|---|---|---|---|---|---|---|---|---|---|---|---|---|---|---|---|---|
| | | | | | | | | | mm | | inch | | | | | | |
| | | $N_1$ | $L_2$ | $H_2$ | $N_2$ | $N$ | $L_3$ | $A_1$ | $H_1$ | $H$ | $L$ | $A_2$ | $A$ | $r$ | $L_1$ | $B$ | $S$ |
| **85** | **UCT217D1** | 38 | 31 | 124 | 73 | 48 | 157 | 30 | 173 | 198 | 260 | 54 | 73 | 98 | 162 | 85.7 | 34.1 |
| **3 1/4** | **UCT217-304D1** | | | | | | | | | | | | | | | | |
| **3 5/16** | **UCT217-305D1** | 1 1/2 | 1 7/32 | 4 7/8 | 2 7/8 | 1 7/8 | 6 3/16 | 1.181 | 6 13/16 | 7 25/32 | 10 1/4 | 2 1/8 | 2 7/8 | 3 27/32 | 6 3/8 | 3.3740 | 1.343 |
| **3 7/16** | **UCT217-307D1** | | | | | | | | | | | | | | | | |

Remarks: 1) These numbers indicate relubricatable type. If maintenance free type is needed, please order without suffix "D1".
Note: Please refer to page 36 for size of grease fitting.

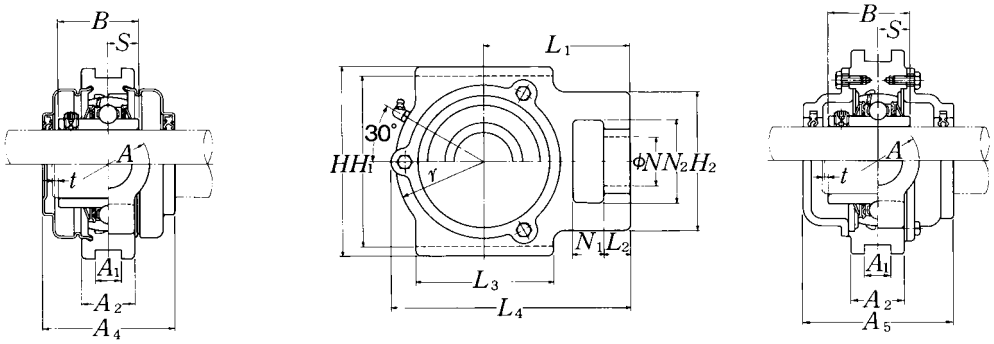


**Cast dust cover type**
Open end: **C-UCT…D1**
Closed end: **CM-UCT…D1**

| Bearing number | Housing number [1] | Unit number [1] pressed steel dust cover type | Unit number [1] cast dust cover type | Nominal dimensions | | | | Mass of unit | | |
|---|---|---|---|---|---|---|---|---|---|---|
| | | | | mm | | | inch | kg | | lb |
| | | | | $t$ max. | $A_4$ | $L_4$ | $A_5$ | UCT | S(SM) | C(CM) |
| UC217D1 | T217D1 | — | **C(CM)-UCT217D1** | 5 | — | 260 | 155 | 11 | — | 14 |
| UC217-304D1 | T217D1 | — | **C(CM)-UCT217-304D1** | 13/64 | — | 10 1/4 | 6 3/32 | 24 | — | 31 |
| UC217-305D1 | T217D1 | | **C(CM)-UCT217-305D1** | | | | | | | |
| UC217-307D1 | T217D1 | | **C(CM)-UCT217-307D1** | | | | | | | |

## Take-up units cast housing
## Set screw type

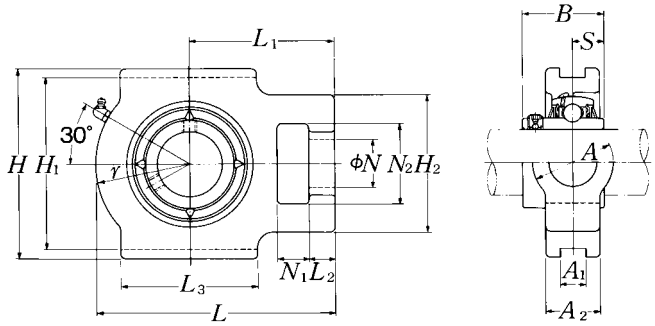


| Shaft dia. mm / inch | Unit number [1] | Nominal dimensions mm / inch | | | | | | | | | | | | | | | |
|---|---|---|---|---|---|---|---|---|---|---|---|---|---|---|---|---|---|
| | | $N_1$ | $L_2$ | $H_2$ | $N_2$ | $N$ | $L_3$ | $A_1$ | $H_1$ | $H$ | $L$ | $A_2$ | $A$ | $r$ | $L_1$ | $B$ | $S$ |
| **25** | **UCT305D1** | 16 | 14 | 62 | 36 | 26 | 65 | 12 | 80 | 89 | 122 | 26 | 36 | 46 | 76 | 38 | 15 |
| 13/16 | **UCT305-013D1** | | | | | | | | | | | | | | | | |
| 7/8 | **UCT305-014D1** | 5/8 | 9/16 | 2 7/16 | 1 13/32 | 1 1/32 | 2 9/16 | 0.472 | 3 5/32 | 3 1/2 | 4 13/16 | 1 1/32 | 1 13/32 | 1 13/16 | 3 | 1.4961 | 0.591 |
| 15/16 | **UCT305-015D1** | | | | | | | | | | | | | | | | |
| **1** | **UCT305-100D1** | | | | | | | | | | | | | | | | |
| **30** | **UCT306D1** | 18 | 16 | 70 | 41 | 28 | 74 | 16 | 90 | 100 | 137 | 28 | 41 | 52 | 85 | 43 | 17 |
| 1 1/16 | **UCT306-101D1** | | | | | | | | | | | | | | | | |
| 1 1/8 | **UCT306-102D1** | 23/32 | 5/8 | 2 3/4 | 1 5/8 | 1 3/32 | 2 29/32 | 0.630 | 3 35/64 | 3 15/16 | 5 13/32 | 1 3/32 | 1 5/8 | 2 1/16 | 3 11/32 | 1.6929 | 0.669 |
| 1 3/16 | **UCT306-103D1** | | | | | | | | | | | | | | | | |
| **35** | **UCT307D1** | 20 | 17 | 75 | 45 | 30 | 80 | 16 | 100 | 111 | 150 | 32 | 45 | 56 | 94 | 48 | 19 |
| 1 1/4 | **UCT307-104D1** | | | | | | | | | | | | | | | | |
| 1 5/16 | **UCT307-105D1** | 25/32 | 21/32 | 2 15/16 | 1 25/32 | 1 3/16 | 3 5/32 | 0.630 | 3 15/16 | 4 3/8 | 5 29/32 | 1 1/4 | 1 25/32 | 2 7/32 | 3 11/16 | 1.8898 | 0.748 |
| 1 3/8 | **UCT307-106D1** | | | | | | | | | | | | | | | | |
| 1 7/16 | **UCT307-107D1** | | | | | | | | | | | | | | | | |
| **40** | **UCT308D1** | 22 | 19 | 83 | 50 | 32 | 89 | 18 | 112 | 124 | 162 | 34 | 50 | 62 | 100 | 52 | 19 |
| 1 1/2 | **UCT308-108D1** | 7/8 | 3/4 | 3 9/32 | 1 31/32 | 1 1/4 | 3 1/2 | 0.709 | 4 13/32 | 4 7/8 | 6 3/8 | 1 11/32 | 1 31/32 | 2 7/16 | 3 15/16 | 2.0472 | 0.748 |
| 1 9/16 | **UCT308-109D1** | | | | | | | | | | | | | | | | |
| **45** | **UCT309D1** | 24 | 20 | 90 | 55 | 34 | 97 | 18 | 125 | 138 | 178 | 38 | 55 | 68 | 110 | 57 | 22 |
| 1 5/8 | **UCT309-110D1** | | | | | | | | | | | | | | | | |
| 1 11/16 | **UCT309-111D1** | 15/16 | 25/32 | 3 17/32 | 2 5/32 | 1 11/32 | 3 13/16 | 0.709 | 4 59/64 | 5 7/16 | 7 | 1 1/2 | 2 5/32 | 2 11/16 | 4 11/32 | 2.2441 | 0.866 |
| 1 3/4 | **UCT309-112D1** | | | | | | | | | | | | | | | | |
| **50** | **UCT310D1** | 27 | 22 | 98 | 61 | 37 | 106 | 20 | 140 | 151 | 192 | 40 | 61 | 74 | 118 | 61 | 22 |
| 1 13/16 | **UCT310-113D1** | | | | | | | | | | | | | | | | |
| 1 7/8 | **UCT310-114D1** | 1 1/16 | 7/8 | 3 27/32 | 2 13/32 | 1 15/32 | 4 3/16 | 0.787 | 5 33/64 | 5 15/16 | 7 9/16 | 1 9/16 | 2 13/32 | 2 29/32 | 4 21/32 | 2.4016 | 0.866 |
| 1 15/16 | **UCT310-115D1** | | | | | | | | | | | | | | | | |
| **55** | **UCT311D1** | 29 | 23 | 105 | 66 | 39 | 115 | 22 | 150 | 163 | 207 | 44 | 66 | 80 | 127 | 66 | 25 |
| **2** | **UCT311-200D1** | | | | | | | | | | | | | | | | |
| 2 1/16 | **UCT311-201D1** | 1 5/32 | 29/32 | 4 1/8 | 2 19/32 | 1 17/32 | 4 17/32 | 0.866 | 5 29/32 | 6 13/32 | 8 5/32 | 1 23/32 | 2 19/32 | 3 5/32 | 5 | 2.5984 | 0.984 |
| 2 1/8 | **UCT311-202D1** | | | | | | | | | | | | | | | | |
| 2 3/16 | **UCT311-203D1** | | | | | | | | | | | | | | | | |

Remarks: 1) These numbers indicate relubricatable type. If maintenance free type is needed, please order without suffix "D1".
Note: Please refer to page 36 for size of grease fitting.

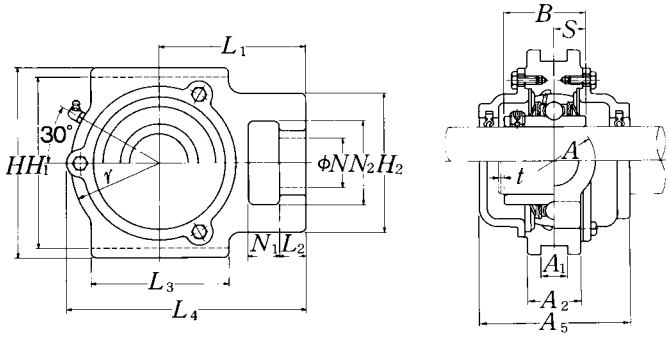


**Cast dust cover type**
Open end: **C-UCT···D1**
Closed end: **CM-UCT···D1**

| Bearing number | Housing [1] number | Unit number [1] cast dust cover type | Nominal dimensions mm | | inch | Mass of unit kg | lb |
|---|---|---|---|---|---|---|---|
| | | | $t$ max. | $L_4$ | $A_5$ | UCT | C(CM) |
| UC305D1 | T305D1 | **C(CM)-UCT305D1** | 2 | 122 | 80 | 1.4 | 1.7 |
| UC305-013D1 | T305D1 | **C(CM)-UCT305-013D1** | | | | | |
| UC305-014D1 | T305D1 | **C(CM)-UCT305-014D1** | 5/64 | 4 13/16 | 3 5/32 | 3.1 | 3.8 |
| UC305-015D1 | T305D1 | **C(CM)-UCT305-015D1** | | | | | |
| UC305-100D1 | T305D1 | **C(CM)-UCT305-100D1** | | | | | |
| UC306D1 | T306D1 | **C(CM)-UCT306D1** | 2 | 139 | 85 | 1.8 | 2.4 |
| UC306-101D1 | T306D1 | **C(CM)-UCT306-101D1** | | | | | |
| UC306-102D1 | T306D1 | **C(CM)-UCT306-102D1** | 5/64 | 5 31/32 | 3 11/32 | 4.0 | 5.3 |
| UC306-103D1 | T306D1 | **C(CM)-UCT306-103D1** | | | | | |
| UC307D1 | T307D1 | **C(CM)-UCT307D1** | 3 | 152 | 95 | 2.3 | 3.2 |
| UC307-104D1 | T307D1 | **C(CM)-UCT307-104D1** | | | | | |
| UC307-105D1 | T307D1 | **C(CM)-UCT307-105D1** | 1/8 | 5 31/32 | 3 3/4 | 5.1 | 7.1 |
| UC307-106D1 | T307D1 | **C(CM)-UCT307-106D1** | | | | | |
| UC307-107D1 | T307D1 | **C(CM)-UCT307-107D1** | | | | | |
| UC308D1 | T308D1 | **C(CM)-UCT308D1** | 3 | 164 | 105 | 3.0 | 4.2 |
| UC308-108D1 | T308D1 | **C(CM)-UCT308-108D1** | 1/8 | 6 15/32 | 4 1/8 | 6.6 | 9.3 |
| UC308-109D1 | T308D1 | **C(CM)-UCT308-109D1** | | | | | |
| UC309D1 | T309D1 | **C(CM)-UCT309D1** | 3 | 181 | 110 | 4.0 | 5.4 |
| UC309-110D1 | T309D1 | **C(CM)-UCT309-110D1** | | | | | |
| UC309-111D1 | T309D1 | **C(CM)-UCT309-111D1** | 1/8 | 7 1/8 | 4 11/32 | 8.8 | 12 |
| UC309-112D1 | T309D1 | **C(CM)-UCT309-112D1** | | | | | |
| UC310D1 | T310D1 | **C(CM)-UCT310D1** | 3 | 197 | 120 | 5.0 | 7.0 |
| UC310-113D1 | T310D1 | **C(CM)-UCT310-113D1** | | | | | |
| UC310-114D1 | T310D1 | **C(CM)-UCT310-114D1** | 1/8 | 7 3/4 | 4 23/32 | 11 | 15 |
| UC310-115D1 | T310D1 | **C(CM)-UCT310-115D1** | | | | | |
| UC311D1 | T311D1 | **C(CM)-UCT311D1** | 4 | 211 | 125 | 6.3 | 8.4 |
| UC311-200D1 | T311D1 | **C(CM)-UCT311-200D1** | | | | | |
| UC311-201D1 | T311D1 | **C(CM)-UCT311-201D1** | 5/32 | 8 5/16 | 4 29/32 | 14 | 19 |
| UC311-202D1 | T311D1 | **C(CM)-UCT311-202D1** | | | | | |
| UC311-203D1 | T311D1 | **C(CM)-UCT311-203D1** | | | | | |

## Take-up units cast housing
## Set screw type

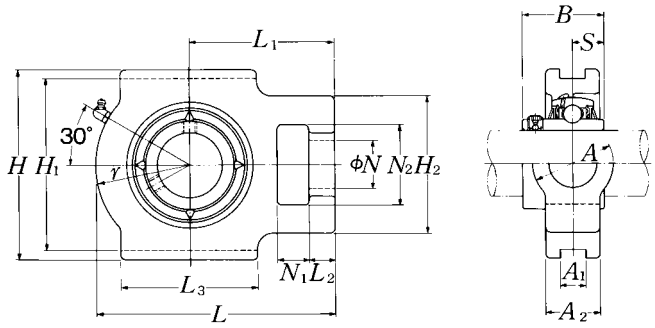


| Shaft dia. mm / inch | Unit number [1] | Nominal dimensions mm / inch | | | | | | | | | | | | | | | |
|---|---|---|---|---|---|---|---|---|---|---|---|---|---|---|---|---|---|
| | | $N_1$ | $L_2$ | $H_2$ | $N_2$ | $N$ | $L_3$ | $A_1$ | $H_1$ | $H$ | $L$ | $A_2$ | $A$ | $r$ | $L_1$ | $B$ | $S$ |
| **60** | **UCT312D1** | 31 | 25 | 113 | 71 | 41 | 123 | 22 | 160 | 178 | 220 | 46 | 71 | 85 | 135 | 71 | 26 |
| **2 1/4** | **UCT312-204D1** | | | | | | | | | | | | | | | | |
| **2 5/16** | **UCT312-205D1** | 1 7/32 | 31/32 | 4 7/16 | 2 25/32 | 1 5/8 | 4 27/32 | 0.866 | 6 19/64 | 7 | 8 21/32 | 1 13/16 | 2 25/32 | 3 11/32 | 5 5/16 | 2.7953 | 1.024 |
| **2 3/8** | **UCT312-206D1** | | | | | | | | | | | | | | | | |
| **2 7/16** | **UCT312-207D1** | | | | | | | | | | | | | | | | |
| **65** | **UCT313D1** | 32 | 27 | 116 | 70 | 43 | 134 | 26 | 170 | 190 | 238 | 50 | 80 | 92 | 146 | 75 | 30 |
| **2 1/2** | **UCT313-208D1** | 1 1/4 | 1 1/16 | 4 9/16 | 2 3/4 | 1 11/16 | 5 9/32 | 1.024 | 6 11/16 | 7 15/32 | 9 3/8 | 1 31/32 | 3 5/32 | 3 5/8 | 5 3/4 | 2.9528 | 1.181 |
| **2 9/16** | **UCT313-209D1** | | | | | | | | | | | | | | | | |
| **70** | **UCT314D1** | 36 | 27 | 130 | 85 | 46 | 140 | 26 | 180 | 202 | 252 | 52 | 90 | 97 | 155 | 78 | 33 |
| **2 5/8** | **UCT314-210D1** | | | | | | | | | | | | | | | | |
| **2 11/16** | **UCT314-211D1** | 1 13/32 | 1 1/16 | 5 1/8 | 3 11/32 | 1 13/16 | 5 1/2 | 1.024 | 7 3/32 | 7 15/16 | 9 29/32 | 2 1/16 | 3 17/32 | 3 13/16 | 6 3/32 | 3.0709 | 1.299 |
| **2 3/4** | **UCT314-212D1** | | | | | | | | | | | | | | | | |
| **75** | **UCT315D1** | 36 | 27 | 132 | 85 | 46 | 150 | 26 | 192 | 216 | 262 | 55 | 90 | 102 | 160 | 82 | 32 |
| **2 13/16** | **UCT315-213D1** | | | | | | | | | | | | | | | | |
| **2 7/8** | **UCT315-214D1** | 1 13/32 | 1 1/16 | 5 3/16 | 3 11/32 | 1 13/16 | 5 29/32 | 1.024 | 7 9/16 | 8 1/2 | 10 5/16 | 2 5/32 | 3 17/32 | 4 1/32 | 6 5/16 | 3.2283 | 1.260 |
| **2 15/16** | **UCT315-215D1** | | | | | | | | | | | | | | | | |
| **3** | **UCT315-300D1** | | | | | | | | | | | | | | | | |
| **80** | **UCT316D1** | 42 | 30 | 150 | 98 | 53 | 160 | 30 | 204 | 230 | 282 | 60 | 102 | 108 | 174 | 86 | 34 |
| **3 1/16** | **UCT316-301D1** | | | | | | | | | | | | | | | | |
| **3 1/8** | **UCT316-302D1** | 1 21/32 | 1 3/16 | 5 29/32 | 3 27/32 | 2 3/32 | 6 5/16 | 1.181 | 8 1/32 | 9 1/16 | 11 3/32 | 2 3/8 | 4 1/32 | 4 1/4 | 6 27/32 | 3.3858 | 1.339 |
| **3 3/16** | **UCT316-303D1** | | | | | | | | | | | | | | | | |
| **85** | **UCT317D1** | 42 | 32 | 152 | 98 | 53 | 170 | 32 | 214 | 240 | 298 | 64 | 102 | 115 | 183 | 96 | 40 |
| **3 1/4** | **UCT317-304D1** | | | | | | | | | | | | | | | | |
| **3 5/16** | **UCT317-305D1** | 1 21/32 | 1 1/4 | 5 31/32 | 3 27/32 | 2 3/32 | 6 11/16 | 1.260 | 8 27/64 | 9 7/16 | 11 23/32 | 2 17/32 | 4 1/32 | 4 17/32 | 7 7/32 | 3.7795 | 1.575 |
| **3 7/16** | **UCT317-307D1** | | | | | | | | | | | | | | | | |
| **90** | **UCT318D1** | 46 | 32 | 160 | 106 | 57 | 175 | 32 | 228 | 255 | 312 | 66 | 110 | 120 | 192 | 96 | 40 |
| **3 7/16** | **UCT318-307D1** | 1 13/16 | 1 1/4 | 6 5/16 | 4 3/16 | 2 1/4 | 6 7/8 | 1.260 | 8 31/32 | 10 1/32 | 12 9/32 | 2 19/32 | 4 11/32 | 4 23/32 | 7 9/16 | 3.7795 | 1.575 |
| **3 1/2** | **UCT318-308D1** | | | | | | | | | | | | | | | | |

Remarks: 1) These numbers indicate relubricatable type. If maintenance free type is needed, please order without suffix "D1".
Note: Please refer to page 36 for size of grease fitting.

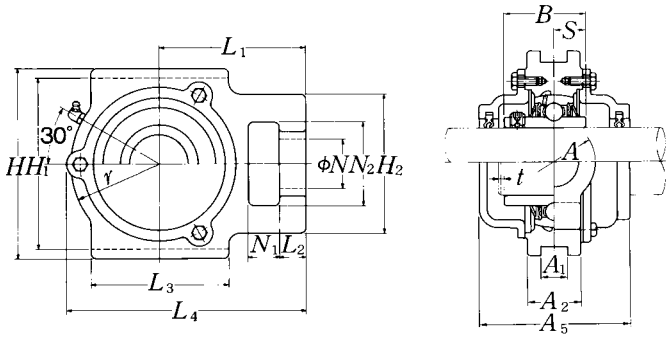


**Cast dust cover type**
Open end: **C-UCT···D1**
Closed end: **CM-UCT···D1**

| Bearing number | Housing [1] number | Unit number [1] cast dust cover type | Nominal dimensions mm $t$ max. | $L_4$ | $A_5$ | Nominal dimensions inch $t$ max. | $L_4$ | $A_5$ | Mass of unit kg UCT | Mass of unit lb C(CM) |
|---|---|---|---|---|---|---|---|---|---|---|
| UC312D1 | T312D1 | C(CM)-UCT312D1 | 4 | 227 | 135 | | | | 7.6 | 10 |
| UC312-204D1 | T312D1 | C(CM)-UCT312-204D1 | | | | | | | | |
| UC312-205D1 | T312D1 | C(CM)-UCT312-205D1 | | | | 5/32 | 8 15/16 | 5 5/16 | 17 | 22 |
| UC312-206D1 | T312D1 | C(CM)-UCT312-206D1 | | | | | | | | |
| UC312-207D1 | T312D1 | C(CM)-UCT312-207D1 | | | | | | | | |
| UC313D1 | T313D1 | C(CM)-UCT313D1 | 4 | 244 | 140 | | | | 9.4 | 12 |
| UC313-208D1 | T313D1 | C(CM)-UCT313-208D1 | | | | 5/32 | 9 19/32 | 5 1/2 | 21 | 26 |
| UC313-209D1 | T313D1 | C(CM)-UCT313-209D1 | | | | | | | | |
| UC314D1 | T314D1 | C(CM)-UCT314D1 | 4 | 258 | 140 | | | | 11 | 14 |
| UC314-210D1 | T314D1 | C(CM)-UCT314-210D1 | | | | | | | | |
| UC314-211D1 | T314D1 | C(CM)-UCT314-211D1 | | | | 5/32 | 10 5/32 | 5 1/2 | 24 | 31 |
| UC314-212D1 | T314D1 | C(CM)-UCT314-212D1 | | | | | | | | |
| UC315D1 | T315D1 | C(CM)-UCT315D1 | 4 | 268 | 150 | | | | 13 | 17 |
| UC315-213D1 | T315D1 | C(CM)-UCT315-213D1 | | | | | | | | |
| UC315-214D1 | T315D1 | C(CM)-UCT315-214D1 | | | | 5/32 | 10 9/16 | 5 29/32 | 29 | 37 |
| UC315-215D1 | T315D1 | C(CM)-UCT315-215D1 | | | | | | | | |
| UC315-300D1 | T315D1 | C(CM)-UCT315-300D1 | | | | | | | | |
| UC316D1 | T316D1 | C(CM)-UCT316D1 | 4 | 287 | 155 | | | | 16 | 20 |
| UC316-301D1 | T316D1 | C(CM)-UCT316-301D1 | | | | | | | | |
| UC316-302D1 | T316D1 | C(CM)-UCT316-302D1 | | | | 5/32 | 11 5/16 | 6 3/32 | 35 | 44 |
| UC316-303D1 | T316D1 | C(CM)-UCT316-303D1 | | | | | | | | |
| UC317D1 | T317D1 | C(CM)-UCT317D1 | 5 | 303 | 170 | | | | 19 | 25 |
| UC317-304D1 | T317D1 | C(CM)-UCT317-304D1 | | | | | | | | |
| UC317-305D1 | T317D1 | C(CM)-UCT317-305D1 | | | | 13/64 | 11 15/16 | 6 11/16 | 42 | 55 |
| UC317-307D1 | T317D1 | C(CM)-UCT317-307D1 | | | | | | | | |
| UC318D1 | T318D1 | C(CM)-UCT318D1 | 5 | 317 | 170 | | | | 21 | 27 |
| UC318-307D1 | T318D1 | C(CM)-UCT318-307D1 | | | | 13/64 | 12 15/32 | 6 11/16 | 46 | 60 |
| UC318-308D1 | T318D1 | C(CM)-UCT318-308D1 | | | | | | | | |

## Take-up units cast housing
## Set screw type

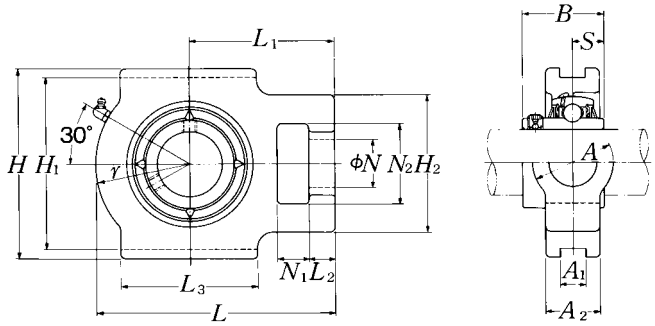


| Shaft dia. mm / inch | Unit number [1] | Nominal dimensions | | | | | | | | | | | | | | | |
|---|---|---|---|---|---|---|---|---|---|---|---|---|---|---|---|---|---|
| | | | | | | | | | mm | | inch | | | | | | |
| | | $N_1$ | $L_2$ | $H_2$ | $N_2$ | $N$ | $L_3$ | $A_1$ | $H_1$ | $H$ | $L$ | $A_2$ | $A$ | $r$ | $L_1$ | $B$ | $S$ |
| **95** | **UCT319D1** | 46 | 33 | 165 | 106 | 57 | 180 | 35 | 240 | 270 | 322 | 72 | 110 | 125 | 197 | 103 | 41 |
| **3 5/8** | **UCT319-310D1** | | | | | | | | | | | | | | | | |
| **3 11/16** | **UCT319-311D1** | 1 13/16 | 1 5/16 | 6 1/2 | 4 3/16 | 2 1/4 | 7 3/32 | 1.378 | 9 29/64 | 10 5/8 | 12 11/16 | 2 27/32 | 4 11/32 | 4 29/32 | 7 3/4 | 4.0551 | 1.614 |
| **3 3/4** | **UCT319-312D1** | | | | | | | | | | | | | | | | |
| **100** | **UCT320D1** | 48 | 34 | 175 | 115 | 59 | 200 | 35 | 260 | 290 | 345 | 75 | 120 | 135 | 210 | 108 | 42 |
| **3 13/16** | **UCT320-313D1** | | | | | | | | | | | | | | | | |
| **3 7/8** | **UCT320-314D1** | 1 7/8 | 1 11/32 | 6 7/8 | 4 17/32 | 2 5/16 | 7 7/8 | 1.378 | 10 15/64 | 11 13/32 | 13 19/32 | 2 15/16 | 4 23/32 | 5 5/16 | 8 9/32 | 4.2520 | 1.654 |
| **3 15/16** | **UCT320-315D1** | | | | | | | | | | | | | | | | |
| **4** | **UCT320-400D1** | | | | | | | | | | | | | | | | |
| **105** | **UCT321D1** | 48 | 34 | 175 | 115 | 59 | 200 | 35 | 260 | 290 | 347 | 75 | 120 | 135 | 212 | 112 | 44 |
| **110** | **UCT322D1** | 52 | 40 | 185 | 125 | 65 | 215 | 38 | 285 | 320 | 385 | 80 | 130 | 150 | 235 | 117 | 46 |
| **120** | **UCT324D1** | 60 | 44 | 210 | 140 | 70 | 230 | 45 | 320 | 355 | 432 | 90 | 140 | 165 | 267 | 126 | 51 |
| **130** | **UCT326D1** | 65 | 47 | 220 | 150 | 75 | 240 | 50 | 350 | 385 | 465 | 100 | 150 | 180 | 285 | 135 | 54 |
| **140** | **UCT328D1** | 70 | 52 | 230 | 160 | 80 | 255 | 50 | 380 | 415 | 515 | 100 | 155 | 200 | 315 | 145 | 59 |

Remarks: 1) These numbers indicate relubricatable type. If maintenance free type is needed, please order without suffix "D1".
Note: Please refer to page 36 for size of grease fitting.

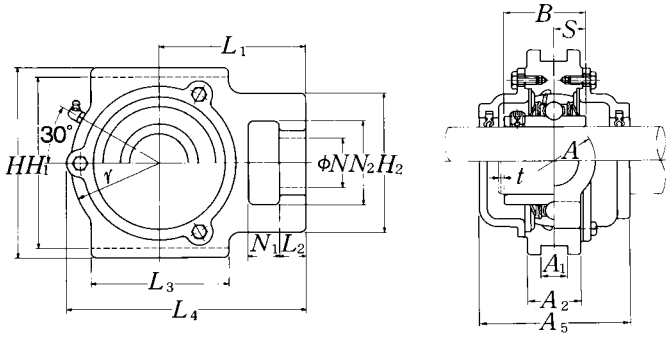


**Cast dust cover type**
Open end: **C-UCT···D1**
Closed end: **CM-UCT···D1**

| Bearing number | Housing [1] number | Unit number [1] cast dust cover type | Nominal [1] dimensions mm | | | inch | Mass of unit kg | lb |
|---|---|---|---|---|---|---|---|---|
| | | | $t$ max. | $L_4$ | $A_5$ | | UCT | C(CM) |
| UC319D1 | T319D1 | **C(CM)-UCT319D1** | 5 | 327 | 180 | | 24 | 31 |
| UC319-310D1 | T319D1 | **C(CM)-UCT319-310D1** | | | | | | |
| UC319-311D1 | T319D1 | **C(CM)-UCT319-311D1** | 13/64 | 12 7/8 | 7 3/32 | | 53 | 68 |
| UC319-312D1 | T319D1 | **C(CM)-UCT319-312D1** | | | | | | |
| UC320D1 | T320D1 | **C(CM)-UCT320D1** | 5 | 350 | 190 | | 30 | 38 |
| UC320-313D1 | T320D1 | **C(CM)-UCT320-313D1** | | | | | | |
| UC320-314D1 | T320D1 | **C(CM)-UCT320-314D1** | 13/64 | 13 25/32 | 7 15/32 | | 66 | 84 |
| UC320-315D1 | T320D1 | **C(CM)-UCT320-315D1** | | | | | | |
| UC320-400D1 | T320D1 | **C(CM)-UCT320-400D1** | | | | | | |
| UC321D1D1 | T321D1 | **C(CM)-UCT321D1** | 5 | 359 | 195 | | 32 | 43 |
| UC322D1D1 | T322D1 | **C(CM)-UCT322D1** | 5 | 395 | 200 | | 40 | 55 |
| UC324D1D1 | T324D1 | **C(CM)-UCT324D1** | 5 | 439 | 215 | | 55 | 71 |
| UC326D1D1 | T326D1 | **C(CM)-UCT326D1** | 6 | 476 | 225 | | 69 | 92 |
| UC328D1D1 | T328D1 | **C(CM)-UCT328D1** | 6 | 519 | 235 | | 84 | 111 |

## Take-up units cast housing
## Set screw type

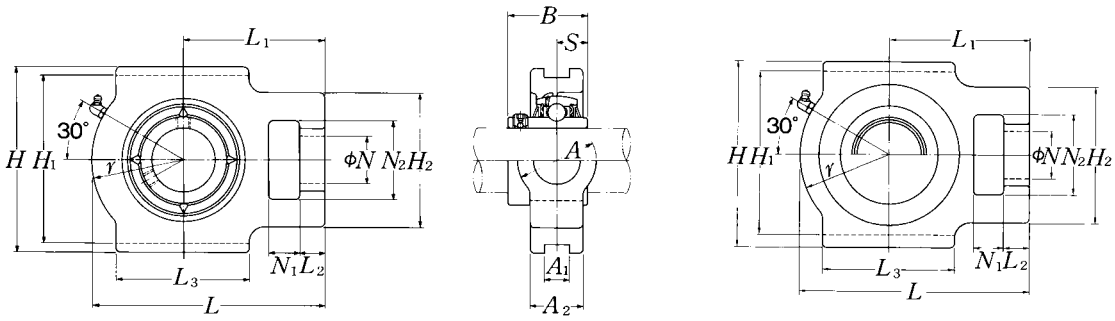


**Pressed steel dust cover type**
Open end: **S-UCTX···D1**
Closed end: **SM-UCTX···D1**

| Shaft dia. mm / inch | Unit number [1] | Nominal dimensions (mm / inch) $N_1$ | $L_2$ | $H_2$ | $N_2$ | $N$ | $L_3$ | $A_1$ | $H_1$ | $H$ | $L$ | $A_2$ | $A$ | $r$ | $L_1$ | $B$ | $S$ |
|---|---|---|---|---|---|---|---|---|---|---|---|---|---|---|---|---|---|
| **25** | **UCTX05D1** | 16 | 12 | 56 | 37 | 22 | 57 | 12 | 89 | 102 | 113 | 28 | 37 | 43 | 70 | 38.1 | 15.9 |
| 13/16 | **UCTX05-013D1** | | | | | | | | | | | | | | | | |
| 7/8 | **UCTX05-014D1** | 5/8 | 15/32 | 2 7/32 | 1 15/32 | 7/8 | 2 1/4 | 0.472 | 3 1/2 | 4 1/32 | 4 7/16 | 1 3/32 | 1 15/32 | 1 11/16 | 2 3/4 | 1.5000 | 0.626 |
| 15/16 | **UCTX05-015D1** | | | | | | | | | | | | | | | | |
| **1** | **UCTX05-100D1** | | | | | | | | | | | | | | | | |
| **30** | **UCTX06D1** | 16 | 15 | 64 | 37 | 22 | 64 | 12 | 89 | 102 | 129 | 30 | 37 | 51 | 78 | 42.9 | 17.5 |
| 1 1/16 | **UCTX06-101D1** | | | | | | | | | | | | | | | | |
| 1 1/8 | **UCTX06-102D1** | 5/8 | 19/32 | 2 17/32 | 1 15/32 | 7/8 | 2 17/32 | 0.472 | 3 1/2 | 4 1/32 | 5 3/32 | 1 3/16 | 1 15/32 | 2 | 3 1/16 | 1.6890 | 0.689 |
| 1 3/16 | **UCTX06-103D1** | | | | | | | | | | | | | | | | |
| 1 1/4 | **UCTX06-104D1** | | | | | | | | | | | | | | | | |
| **35** | **UCTX07D1** | 19 | 17 | 83 | 49 | 29 | 83 | 16 | 102 | 114 | 144 | 36 | 49 | 56 | 88 | 49.2 | 19 |
| 1 5/16 | **UCTX07-105D1** | | | | | | | | | | | | | | | | |
| 1 3/8 | **UCTX07-106D1** | 3/4 | 21/32 | 3 9/32 | 1 15/16 | 1 5/32 | 3 9/32 | 0.630 | 4 1/64 | 4 1/2 | 5 21/32 | 1 13/32 | 1 15/16 | 2 7/32 | 3 15/32 | 1.9370 | 0.748 |
| 1 7/16 | **UCTX07-107D1** | | | | | | | | | | | | | | | | |
| **40** | **UCTX08D1** | 19 | 17 | 83 | 49 | 29 | 83 | 16 | 102 | 117 | 144 | 36 | 49 | 57 | 87 | 49.2 | 19 |
| 1 1/2 | **UCTX08-108D1** | 3/4 | 21/32 | 3 9/32 | 1 15/16 | 1 5/32 | 3 9/32 | 0.630 | 4 1/64 | 4 19/32 | 5 21/32 | 1 13/32 | 1 15/16 | 2 1/4 | 3 7/16 | 1.9370 | 0.748 |
| 1 9/16 | **UCTX08-109D1** | | | | | | | | | | | | | | | | |
| **45** | **UCTX09D1** | 19 | 18 | 83 | 49 | 29 | 86 | 16 | 102 | 117 | 151 | 38 | 49 | 59 | 92 | 51.6 | 19 |
| 1 5/8 | **UCTX09-110D1** | | | | | | | | | | | | | | | | |
| 1 11/16 | **UCTX09-111D1** | 3/4 | 23/32 | 3 9/32 | 1 15/16 | 1 5/32 | 3 3/8 | 0.630 | 4 1/64 | 4 19/32 | 5 15/16 | 1 1/2 | 1 15/16 | 2 5/16 | 3 5/8 | 2.0315 | 0.748 |
| 1 3/4 | **UCTX09-112D1** | | | | | | | | | | | | | | | | |
| 1 13/16 | **UCTX09-113D1** | | | | | | | | | | | | | | | | |
| **50** | **UCTX10D1** | 25 | 21 | 102 | 64 | 35 | 95 | 22 | 130 | 146 | 171 | 42 | 64 | 65 | 106 | 55.6 | 22.2 |
| 1 7/8 | **UCTX10-114D1** | | | | | | | | | | | | | | | | |
| 1 15/16 | **UCTX10-115D1** | 31/32 | 13/16 | 4 1/32 | 2 17/32 | 1 3/8 | 3 3/4 | 0.866 | 5 1/8 | 5 3/4 | 6 23/32 | 1 21/32 | 2 17/32 | 2 9/16 | 4 3/16 | 2.1890 | 0.874 |
| **2** | **UCTX10-200D1** | | | | | | | | | | | | | | | | |

Remarks: 1) These numbers indicate relubricatable type. If maintenance free type is needed, please order without suffix "D1".
Note: Please refer to page 36 for size of grease fitting.

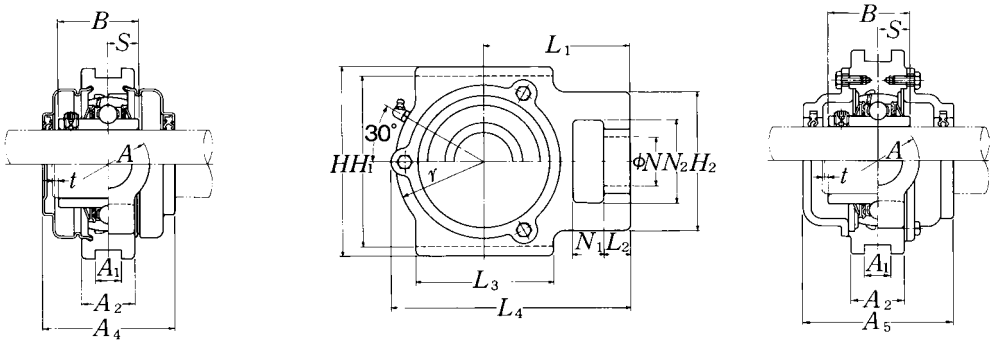


**Cast dust cover type**
Open end: **C-UCTX···D1**
Closed end: **CM-UCTX···D1**

| Bearing number | Housing number [1] | Unit number [1] pressed steel dust cover type | Unit number [1] cast dust cover type | Nominal dimensions mm / inch: $t$ max. | $A_4$ | $L_4$ | $A_5$ | Mass of unit kg / lb: UCTX | S(SM) | C(CM) |
|---|---|---|---|---|---|---|---|---|---|---|
| UCX05D1 | TX05D1 | S(SM)-UCTX05D1 | C(CM)-UCTX05D1 | 2 | 62 | 113.5 | 75 | 1.4 | 1.5 | 1.8 |
| UCX05-013D1 | TX05D1 | S(SM)-UCTX05-013D1 | C(CM)-UCTX05-013D1 | | | | | | | |
| UCX05-014D1 | TX05D1 | S(SM)-UCTX05-014D1 | C(CM)-UCTX05-014D1 | 5/64 | 2 7/16 | 4 15/32 | 2 15/16 | 3.1 | 3.3 | 4.0 |
| UCX05-015D1 | TX05D1 | S(SM)-UCTX05-015D1 | C(CM)-UCTX05-015D1 | | | | | | | |
| UCX05-100D1 | TX05D1 | S(SM)-UCTX05-100D1 | C(CM)-UCTX05-100D1 | | | | | | | |
| UCX06D1 | TX06D1 | S(SM)-UCTX06D1 | C(CM)-UCTX06D1 | 2 | 72 | 129 | 80 | 1.8 | 2.0 | 2.3 |
| UCX06-101D1 | TX06D1 | S(SM)-UCTX06-101D1 | C(CM)-UCTX06-101D1 | | | | | | | |
| UCX06-102D1 | TX06D1 | S(SM)-UCTX06-102D1 | C(CM)-UCTX06-102D1 | 5/64 | 2 27/32 | 5 3/32 | 3 5/32 | 4.0 | 4.4 | 5.1 |
| UCX06-103D1 | TX06D1 | S(SM)-UCTX06-103D1 | C(CM)-UCTX06-103D1 | | | | | | | |
| UCX06-104D1 | TX06D1 | S(SM)-UCTX06-104D1 | C(CM)-UCTX06-104D1 | | | | | | | |
| UCX07D1 | TX07D1 | S(SM)-UCTX07D1 | C(CM)-UCTX07D1 | 3 | 82 | 144 | 90 | 2.6 | 2.8 | 3.5 |
| UCX07-105D1 | TX07D1 | S(SM)-UCTX07-105D1 | C(CM)-UCTX07-105D1 | | | | | | | |
| UCX07-106D1 | TX07D1 | S(SM)-UCTX07-106D1 | C(CM)-UCTX07-106D1 | 1/8 | 3 7/32 | 5 21/32 | 3 17/32 | 5.7 | 6.2 | 7.7 |
| UCX07-107D1 | TX07D1 | S(SM)-UCTX07-107D1 | C(CM)-UCTX07-107D1 | | | | | | | |
| UCX08D1 | TX08D1 | S(SM)-UCTX08D1 | C(CM)-UCTX08D1 | 3 | 82 | 144.5 | 95 | 2.6 | 2.8 | 3.5 |
| UCX08-108D1 | TX08D1 | S(SM)-UCTX08-108D1 | C(CM)-UCTX08-108D1 | 1/8 | 3 7/32 | 5 11/16 | 3 3/4 | 5.7 | 6.2 | 7.7 |
| UCX08-109D1 | TX08D1 | S(SM)-UCTX08-109D1 | C(CM)-UCTX08-109D1 | | | | | | | |
| UCX09D1 | TX09D1 | S(SM)-UCTX09D1 | C(CM)-UCTX09D1 | 3 | 87 | 152 | 100 | 2.7 | 3.0 | 3.7 |
| UCX09-110D1 | TX09D1 | S(SM)-UCTX09-110D1 | C(CM)-UCTX09-110D1 | | | | | | | |
| UCX09-111D1 | TX09D1 | S(SM)-UCTX09-111D1 | C(CM)-UCTX09-111D1 | 1/8 | 3 7/16 | 5 31/32 | 3 15/16 | 6.0 | 6.6 | 8.2 |
| UCX09-112D1 | TX09D1 | S(SM)-UCTX09-112D1 | C(CM)-UCTX09-112D1 | | | | | | | |
| UCX09-113D1 | TX09D1 | S(SM)-UCTX09-113D1 | C(CM)-UCTX09-113D1 | | | | | | | |
| UCX10D1 | TX10D1 | S(SM)-UCTX10D1 | C(CM)-UCTX10D1 | 3 | 92 | 171.5 | 100 | 4.2 | 4.6 | 5.4 |
| UCX10-114D1 | TX10D1 | S(SM)-UCTX10-114D1 | C(CM)-UCTX10-114D1 | | | | | | | |
| UCX10-115D1 | TX10D1 | S(SM)-UCTX10-115D1 | C(CM)-UCTX10-115D1 | 1/8 | 3 5/8 | 6 3/4 | 3 15/16 | 9.3 | 10 | 12 |
| UCX10-200D1 | TX10D1 | S(SM)-UCTX10-200D1 | C(CM)-UCTX10-200D1 | | | | | | | |

## Take-up units cast housing
## Set screw type

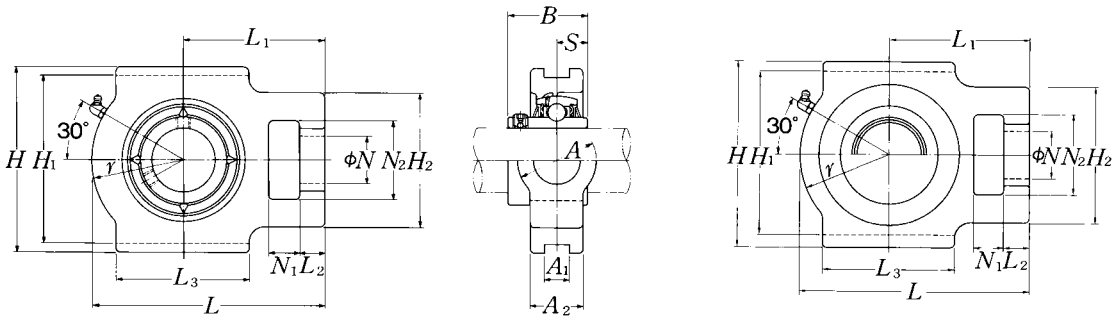


**Pressed steel dust cover type**
Open end: **S-UCTX···D1**
Closed end: **SM-UCTX···D1**

| Shaft dia. mm / inch | Unit number [1] | Nominal dimensions (mm / inch) $N_1$ | $L_2$ | $H_2$ | $N_2$ | $N$ | $L_3$ | $A_1$ | $H_1$ | $H$ | $L$ | $A_2$ | $A$ | $r$ | $L_1$ | $B$ | $S$ |
|---|---|---|---|---|---|---|---|---|---|---|---|---|---|---|---|---|---|
| 55 | UCTX11D1 | 32 | 21 | 102 | 64 | 35 | 102 | 22 | 130 | 146 | 194 | 44 | 64 | 75 | 119 | 65.1 | 25.4 |
| 2 1/16 | UCTX11-201D1 | | | | | | | | | | | | | | | | |
| 2 1/8 | UCTX11-202D1 | | | | | | | | | | | | | | | | |
| 2 3/16 | UCTX11-203D1 | 1 1/4 | 13/16 | 4 1/32 | 2 17/32 | 1 3/8 | 4 1/32 | 0.866 | 5 1/8 | 5 3/4 | 7 5/8 | 1 23/32 | 2 17/32 | 2 15/16 | 4 11/16 | 2.5630 | 1.000 |
| 2 1/4 | UCTX11-204D1 | | | | | | | | | | | | | | | | |
| 2 5/16 | UCTX11-205D1 | | | | | | | | | | | | | | | | |
| 60 | UCTX12D1 | 32 | 23 | 111 | 70 | 41 | 121 | 26 | 151 | 167 | 224 | 48 | 70 | 87 | 137 | 65.1 | 25.4 |
| 2 3/8 | UCTX12-206D1 | 1 1/4 | 29/32 | 4 3/8 | 2 3/4 | 1 5/8 | 4 3/4 | 1.024 | 5 15/16 | 6 9/16 | 8 13/16 | 1 7/8 | 2 3/4 | 3 7/16 | 5 13/32 | 2.5630 | 1.000 |
| 2 7/16 | UCTX12-207D1 | | | | | | | | | | | | | | | | |
| 65 | UCTX13D1 | 32 | 23 | 111 | 70 | 41 | 121 | 26 | 151 | 167 | 224 | 48 | 70 | 87 | 137 | 74.6 | 30.2 |
| 2 1/2 | UCTX13-208D1 | 1 1/4 | 29/32 | 4 3/8 | 2 3/4 | 1 5/8 | 4 3/4 | 1.024 | 5 15/16 | 6 9/16 | 8 13/16 | 1 7/8 | 2 3/4 | 3 7/16 | 5 13/32 | 2.9370 | 1.189 |
| 2 9/16 | UCTX13-209D1 | | | | | | | | | | | | | | | | |
| 70 | UCTX14D1 | 32 | 23 | 111 | 70 | 41 | 121 | 26 | 151 | 167 | 232 | 48 | 70 | 92 | 140 | 77.8 | 33.3 |
| 2 5/8 | UCTX14-210D1 | | | | | | | | | | | | | | | | |
| 2 11/16 | UCTX14-211D1 | 1 1/4 | 29/32 | 4 3/8 | 2 3/4 | 1 5/8 | 4 3/4 | 1.024 | 5 15/16 | 6 9/16 | 9 1/8 | 1 7/8 | 2 3/4 | 3 5/8 | 5 1/2 | 3.0630 | 1.311 |
| 2 3/4 | UCTX14-212D1 | | | | | | | | | | | | | | | | |
| 75 | UCTX15D1 | 32 | 23 | 111 | 70 | 41 | 121 | 28 | 165 | 184 | 235 | 48 | 70 | 95 | 140 | 82.6 | 33.3 |
| 2 13/16 | UCTX15-213D1 | | | | | | | | | | | | | | | | |
| 2 7/8 | UCTX15-214D1 | 1 1/4 | 29/32 | 4 3/8 | 2 3/4 | 1 5/8 | 4 3/4 | 1.102 | 6 1/2 | 7 1/4 | 9 1/4 | 1 7/8 | 2 3/4 | 3 3/4 | 5 1/2 | 3.2520 | 1.311 |
| 2 15/16 | UCTX15-215D1 | | | | | | | | | | | | | | | | |
| 3 | UCTX15-300D1 | | | | | | | | | | | | | | | | |
| 80 | UCTX16D1 | 38 | 30 | 124 | 73 | 48 | 157 | 28 | 173 | 198 | 260 | 54 | 73 | 98 | 162 | 85.7 | 34.1 |
| 3 1/16 | UCTX16-301D1 | | | | | | | | | | | | | | | | |
| 3 1/8 | UCTX16-302D1 | 1 1/2 | 1 3/16 | 4 7/8 | 2 7/8 | 1 7/8 | 6 3/16 | 1.102 | 6 13/16 | 7 25/32 | 10 1/4 | 2 1/8 | 2 7/8 | 3 27/32 | 6 3/8 | 3.3740 | 1.343 |
| 3 3/16 | UCTX16-303D1 | | | | | | | | | | | | | | | | |
| 3 1/4 | UCTX16-304D1 | | | | | | | | | | | | | | | | |
| 85 | UCTX17D1 | 38 | 30 | 124 | 73 | 48 | 157 | 28 | 173 | 198 | 260 | 54 | 73 | 98 | 162 | 96 | 39.7 |
| 3 5/16 | UCTX17-305D1 | 1 1/2 | 1 3/16 | 4 7/8 | 2 7/8 | 1 7/8 | 6 3/16 | 1.102 | 6 13/16 | 7 25/32 | 10 1/4 | 2 1/8 | 2 7/8 | 3 27/32 | 6 3/8 | 3.7795 | 1.563 |
| 3 7/16 | UCTX17-307D1 | | | | | | | | | | | | | | | | |

Remarks: 1) These numbers indicate relubricatable type. If maintenance free type is needed, please order without suffix "D1".
Note: Please refer to page 36 for size of grease fitting.

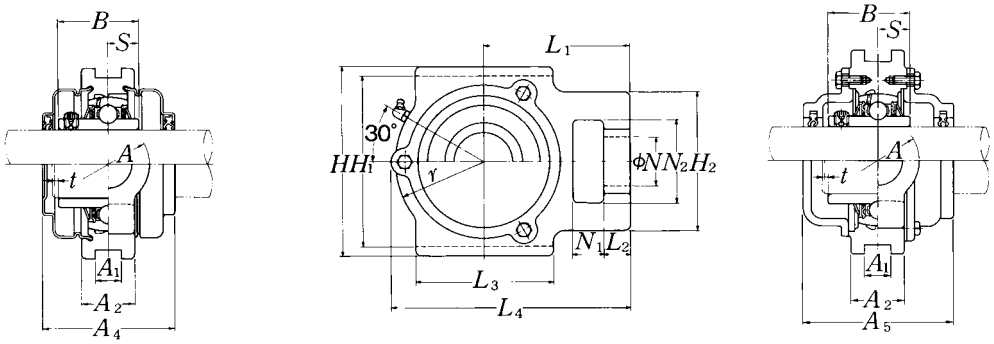


**Cast dust cover type**
Open end: **C-UCTX···D1**
Closed end: **CM-UCTX···D1**

| Bearing number | Housing number [1] | Unit number [1] pressed steel dust cover type | Unit number [1] cast dust cover type | Nominal dimensions mm | | | inch | Mass of unit kg | | lb |
|---|---|---|---|---|---|---|---|---|---|---|
| | | | | $t$ max. | $A_4$ | $L_4$ | $A_5$ | UCTX | S(SM) | C(CM) |
| UCX11D1 | TX11D1 | S(SM)-UCTX11D1 | C(CM)-UCTX11D1 | 4 | 102 | 194 | 115 | 5.2 | 5.6 | 6.7 |
| UCX11-201D1 | TX11D1 | S(SM)-UCTX11-201D1 | C(CM)-UCTX11-201D1 | | | | | | | |
| UCX11-202D1 | TX11D1 | S(SM)-UCTX11-202D1 | C(CM)-UCTX11-202D1 | | | | | | | |
| UCX11-203D1 | TX11D1 | S(SM)-UCTX11-203D1 | C(CM)-UCTX11-203D1 | 5/32 | 4 1/32 | 7 5/8 | 4 17/32 | 11 | 12 | 15 |
| UC212-204D1 | TX11D1 | S(SM)-UCTX11-204D1 | C(CM)-UCTX11-204D1 | | | | | | | |
| UC212-205D1 | TX11D1 | S(SM)-UCTX11-205D1 | C(CM)-UCTX11-205D1 | | | | | | | |
| UCX12D1 | TX12D1 | S(SM)-UCTX12D1 | C(CM)-UCTX12D1 | 4 | 107 | 224 | 120 | 7.2 | 7.7 | 9.0 |
| UCX12-206D1 | TX12D1 | S(SM)-UCTX12-206D1 | C(CM)-UCTX12-206D1 | 5/32 | 4 7/32 | 8 13/16 | 4 23/32 | 16 | 17 | 20 |
| UCX12-207D1 | TX12D1 | S(SM)-UCTX12-207D1 | C(CM)-UCTX12-207D1 | | | | | | | |
| UCX13D1 | TX13D1 | — | C(CM)-UCTX13D1 | 4 | — | 224 | 135 | 7.5 | — | 9.8 |
| UCX13-208D1 | TX13D1 | — | C(CM)-UCTX13-208D1 | 5/32 | — | 8 13/16 | 5 5/16 | 17 | — | 22 |
| UCX13-209D1 | TX13D1 | | C(CM)-UCTX13-209D1 | | | | | | | |
| UCX14D1 | TX14D1 | — | C(CM)-UCTX14D1 | 4 | — | 232 | 135 | 7.7 | — | 10 |
| UCX14-210D1 | TX14D1 | | C(CM)-UCTX14-210D1 | | | | | | | |
| UCX14-211D1 | TX14D1 | — | C(CM)-UCTX14-211D1 | 5/32 | — | 9 1/8 | 5 5/16 | 17 | — | 22 |
| UCX14-212D1 | TX14D1 | | C(CM)-UCTX14-212D1 | | | | | | | |
| UCX15D1 | TX15D1 | — | C(CM)-UCTX15D1 | 4 | — | 235 | 145 | 8.3 | — | 11 |
| UCX15-213D1 | TX15D1 | | C(CM)-UCTX15-213D1 | | | | | | | |
| UCX15-214D1 | TX15D1 | — | C(CM)-UCTX15-214D1 | 5/32 | — | 9 1/4 | 5 23/32 | 18 | — | 24 |
| UCX15-215D1 | TX15D1 | | C(CM)-UCTX15-215D1 | | | | | | | |
| UCX15-300D1 | TX15D1 | | C(CM)-UCTX15-300D1 | | | | | | | |
| UCX16D1 | TX16D1 | — | C(CM)-UCTX16D1 | 4 | — | 260 | 155 | 11 | — | 14 |
| UCX16-301D1 | TX16D1 | | C(CM)-UCTX16-301D1 | | | | | | | |
| UCX16-302D1 | TX16D1 | — | C(CM)-UCTX16-302D1 | 5/32 | — | 10 1/4 | 6 3/32 | 24 | — | 31 |
| UCX16-303D1 | TX16D1 | | C(CM)-UCTX16-303D1 | | | | | | | |
| UC217-304D1 | TX16D1 | | C(CM)-UCTX16-304D1 | | | | | | | |
| UCX17D1 | TX17D1 | — | C(CM)-UCTX17D1 | 5 | — | 262 | 165 | 11 | — | 15 |
| UCX17-305D1 | TX17D1 | — | C(CM)-UCTX17-305D1 | 13/64 | — | 10 5/16 | 6 1/2 | 24 | — | 33 |
| UCX17-307D1 | TX17D1 | | C(CM)-UCTX17-307D1 | | | | | | | |

## Take-up units (Steel series)
## Set screw type

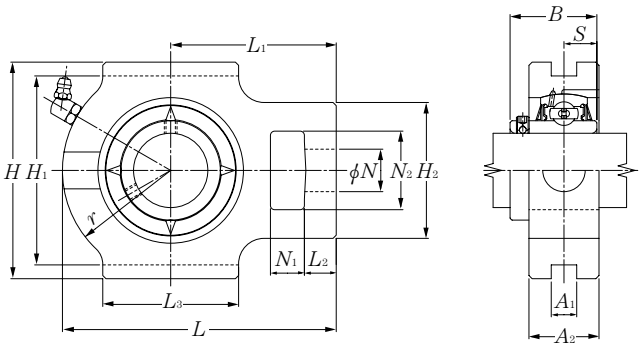


| Shaft dia. mm | Unit number 1) | Nominal dimensions mm | | | | | | | | | | | | | | |
|---|---|---|---|---|---|---|---|---|---|---|---|---|---|---|---|---|
| | | $N_1$ | $L_2$ | $H_2$ | $N_2$ | $N$ | $L_3$ | $A_1$ | $H_1$ | $H$ | $L$ | $A_2$ | $r$ | $L_1$ | $B$ | $S$ |
| 12 | UCTG201D1 | 16 | 12 | 51 | 32 | 19 | 51 | 12 | 76 | 89 | 94 | 30 | 33 | 61 | 31 | 12.7 |
| 15 | UCTG202D1 | 16 | 12 | 51 | 32 | 19 | 51 | 12 | 76 | 89 | 94 | 30 | 33 | 61 | 31 | 12.7 |
| 17 | UCTG203D1 | 16 | 12 | 51 | 32 | 19 | 51 | 12 | 76 | 89 | 94 | 30 | 33 | 61 | 31 | 12.7 |
| 20 | UCTG204D1 | 16 | 12 | 51 | 32 | 19 | 51 | 12 | 76 | 89 | 94 | 30 | 33 | 61 | 31 | 12.7 |
| 25 | UCTG205D1 | 16 | 12 | 51 | 32 | 19 | 51 | 12 | 76 | 89 | 97 | 30 | 35 | 62 | 34.1 | 14.3 |
| 30 | UCTG206D1 | 16 | 12 | 56 | 37 | 22 | 57 | 12 | 89 | 102 | 113 | 35 | 43 | 70 | 38.1 | 15.9 |
| 35 | UCTG207D1 | 16 | 15 | 64 | 37 | 22 | 64 | 12 | 89 | 102 | 129 | 35 | 51 | 78 | 42.9 | 17.5 |
| 40 | UCTG208D1 | 19 | 18 | 83 | 49 | 29 | 83 | 16 | 102 | 114 | 144 | 45 | 56 | 88 | 49.2 | 19 |
| 45 | UCTG209D1 | 19 | 18 | 83 | 49 | 29 | 83 | 16 | 102 | 117 | 145 | 45 | 57 | 88 | 49.2 | 19 |
| 50 | UCTG210D1 | 19 | 18 | 83 | 49 | 29 | 86 | 16 | 102 | 117 | 151 | 45 | 59 | 92 | 51.6 | 19 |
| 55 | UCTG211D1 | 25 | 21 | 102 | 64 | 35 | 95 | 22 | 130 | 146 | 171 | 55 | 65 | 106 | 55.6 | 22.2 |
| 60 | UCTG212D1 | 32 | 21 | 102 | 64 | 35 | 102 | 22 | 130 | 146 | 194 | 55 | 75 | 119 | 65.1 | 25.4 |
| 65 | UCTG213D1 | 32 | 23 | 111 | 70 | 41 | 121 | 26 | 151 | 167 | 224 | 60 | 87 | 137 | 65.1 | 25.4 |
| 70 | UCTG214D1 | 32 | 23 | 111 | 70 | 41 | 121 | 26 | 151 | 167 | 224 | 60 | 87 | 137 | 74.6 | 30.2 |
| 75 | UCTG215D1 | 32 | 23 | 111 | 70 | 41 | 121 | 26 | 151 | 167 | 232 | 60 | 92 | 140 | 77.8 | 33.3 |
| 80 | UCTG216D1 | 32 | 23 | 111 | 70 | 41 | 121 | 26 | 165 | 184 | 235 | 60 | 95 | 140 | 82.6 | 33.3 |
| 85 | UCTG217D1 | 38 | 31 | 124 | 73 | 48 | 157 | 30 | 173 | 198 | 260 | 70 | 98 | 162 | 85.7 | 34.1 |

Remarks: 1) These numbers indicate relubricatable type. If maintenance free type is needed, please order without suffix "D1".
Note: Please refer to page 36 for size of grease fitting.

| Bearing number | Housing [1)] number | Mass of unit kg |
|---|---|---|
| UC201D1 | TG204D1 | 1.2 |
| UC202D1 | TG204D1 | 1.2 |
| UC203D1 | TG204D1 | 1.1 |
| UC204D1 | TG204D1 | 1.1 |
| UC205D1 | TG205D1 | 1.1 |
| UC206D1 | TG206D1 | 1.7 |
| UC207D1 | TG207D1 | 2.0 |
| UC208D1 | TG208D1 | 3.3 |
| UC209D1 | TG209D1 | 3.2 |
| UC210D1 | TG210D1 | 3.3 |
| UC211D1 | TG211D1 | 5.7 |
| UC212D1 | TG212D1 | 6.4 |
| UC213D1 | TG213D1 | 9.6 |
| UC214D1 | TG214D1 | 9.4 |
| UC215D1 | TG215D1 | 9.7 |
| UC216D1 | TG216D1 | 10 |
| UC217D1 | TG217D1 | 15 |

## Take-up units (Steel series)
## Set screw type

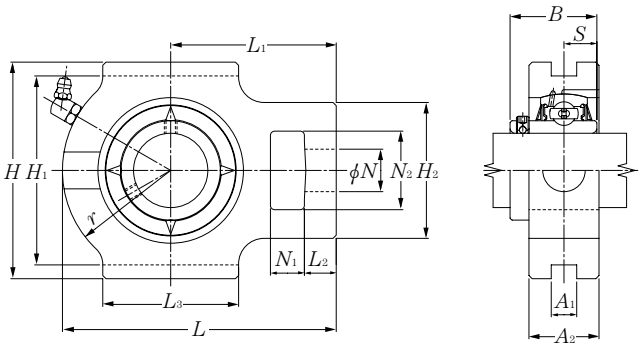


| Shaft dia. mm | Unit number [1] | Nominal dimensions mm | | | | | | | | | | | | | | |
|---|---|---|---|---|---|---|---|---|---|---|---|---|---|---|---|---|
| | | $N_1$ | $L_2$ | $H_2$ | $N_2$ | $N$ | $L_3$ | $A_1$ | $H_1$ | $H$ | $L$ | $A_2$ | $r$ | $L_1$ | $B$ | $S$ |
| 25 | UCTG305D1 | 16 | 14 | 62 | 36 | 26 | 65 | 12 | 80 | 89 | 122 | 35 | 46 | 76 | 38 | 15 |
| 30 | UCTG306D1 | 18 | 16 | 70 | 41 | 28 | 74 | 16 | 90 | 100 | 137 | 40 | 52 | 85 | 43 | 17 |
| 35 | UCTG307D1 | 20 | 17 | 75 | 45 | 30 | 80 | 16 | 100 | 111 | 150 | 40 | 56 | 94 | 48 | 19 |
| 40 | UCTG308D1 | 22 | 19 | 83 | 50 | 32 | 89 | 18 | 112 | 124 | 162 | 45 | 62 | 100 | 52 | 19 |
| 45 | UCTG309D1 | 24 | 20 | 90 | 55 | 34 | 97 | 18 | 125 | 138 | 178 | 50 | 68 | 110 | 57 | 22 |
| 50 | UCTG310D1 | 27 | 22 | 98 | 61 | 37 | 106 | 20 | 140 | 151 | 192 | 55 | 74 | 118 | 61 | 22 |
| 55 | UCTG311D1 | 29 | 23 | 105 | 66 | 39 | 115 | 22 | 150 | 163 | 207 | 60 | 80 | 127 | 66 | 25 |
| 60 | UCTG312D1 | 31 | 25 | 113 | 71 | 41 | 123 | 22 | 160 | 178 | 220 | 65 | 85 | 135 | 71 | 26 |
| 65 | UCTG313D1 | 32 | 27 | 116 | 70 | 43 | 134 | 26 | 170 | 190 | 238 | 65 | 92 | 146 | 75 | 30 |
| 70 | UCTG314D1 | 36 | 27 | 130 | 85 | 46 | 140 | 26 | 180 | 202 | 252 | 70 | 97 | 155 | 78 | 33 |
| 75 | UCTG315D1 | 36 | 27 | 132 | 85 | 46 | 150 | 26 | 192 | 216 | 262 | 70 | 102 | 160 | 82 | 32 |
| 80 | UCTG316D1 | 42 | 30 | 150 | 98 | 53 | 160 | 30 | 204 | 230 | 282 | 80 | 108 | 174 | 86 | 34 |
| 85 | UCTG317D1 | 42 | 32 | 152 | 98 | 53 | 170 | 32 | 214 | 240 | 298 | 80 | 115 | 183 | 96 | 40 |
| 90 | UCTG318D1 | 46 | 32 | 160 | 106 | 57 | 175 | 32 | 228 | 255 | 312 | 90 | 120 | 192 | 96 | 40 |
| 95 | UCTG319D1 | 46 | 33 | 165 | 106 | 57 | 180 | 35 | 240 | 270 | 322 | 90 | 125 | 197 | 103 | 41 |
| 100 | UCTG320D1 | 48 | 34 | 175 | 115 | 59 | 200 | 35 | 260 | 290 | 345 | 100 | 135 | 210 | 108 | 42 |
| 105 | UCTG321D1 | 48 | 34 | 175 | 115 | 59 | 200 | 35 | 260 | 290 | 347 | 100 | 135 | 212 | 112 | 44 |
| 110 | UCTG322D1 | 52 | 40 | 185 | 125 | 65 | 215 | 38 | 285 | 320 | 385 | 100 | 150 | 235 | 117 | 46 |
| 120 | UCTG324D1 | 60 | 44 | 210 | 140 | 70 | 230 | 45 | 320 | 355 | 432 | 110 | 165 | 267 | 126 | 51 |
| 130 | UCTG326D1 | 65 | 47 | 220 | 150 | 75 | 240 | 50 | 350 | 385 | 465 | 120 | 180 | 285 | 135 | 54 |
| 140 | UCTG328D1 | 70 | 52 | 230 | 160 | 80 | 255 | 50 | 380 | 415 | 515 | 120 | 200 | 315 | 145 | 59 |

Remarks: 1) These numbers indicate relubricatable type. If maintenance free type is needed, please order without suffix "D1".
Note: Please refer to page 36 for size of grease fitting.

| Bearing number | Housing [1)] number | Mass of unit kg |
|---|---|---|
| UC305D1 | TG305D1 | 1.8 |
| UC306D1 | TG306D1 | 2.5 |
| UC307D1 | TG307D1 | 3.0 |
| UC308D1 | TG308D1 | 4.0 |
| UC309D1 | TG309D1 | 5.4 |
| UC310D1 | TG310D1 | 6.9 |
| UC311D1 | TG311D1 | 8.6 |
| UC312D1 | TG312D1 | 11 |
| UC313D1 | TG313D1 | 12 |
| UC314D1 | TG314D1 | 15 |
| UC315D1 | TG315D1 | 17 |
| UC316D1 | TG316D1 | 22 |
| UC317D1 | TG317D1 | 24 |
| UC318D1 | TG318D1 | 29 |
| UC319D1 | TG319D1 | 31 |
| UC320D1 | TG320D1 | 41 |
| UC321D1 | TG321D1 | 40 |
| UC322D1 | TG322D1 | 49 |
| UC324D1 | TG324D1 | 68 |
| UC326D1 | TG326D1 | 85 |
| UC328D1 | TG328D1 | 103 |

## Cartridge units cast housing
## Set screw type

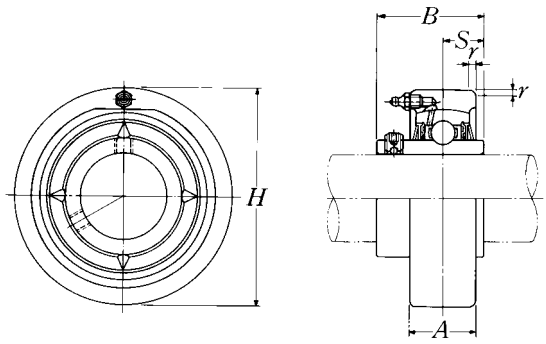


| Shaft dia. mm / inch | Unit number [1] | Nominal dimensions mm / inch H | A | r | B | S | Bearing number | Housing [1] number | Mass of unit kg / lb |
|---|---|---|---|---|---|---|---|---|---|
| 12 | UCC201D1 | 72 | 20 | 2 | 31 | 12.7 | UC201D1 | C204D1 | 0.5 |
| 1/2 | UCC201-008D1 | 2.8346 | 25/32 | 0.079 | 1.2205 | 0.500 | UC201-008D1 | C204D1 | 1.1 |
| 15 | UCC202D1 | 72 | 20 | 2 | 31 | 12.7 | UC202D1 | C204D1 | 0.5 |
| 9/16 | UCC202-009D1 | 2.8346 | 25/32 | 0.079 | 1.2205 | 0.500 | UC202-009D1 | C204D1 | 1.1 |
| 5/8 | UCC202-010D1 | | | | | | UC202-010D1 | C204D1 | |
| 17 | UCC203D1 | 72 | 20 | 2 | 31 | 12.7 | UC203D1 | C204D1 | 0.5 |
| 11/16 | UCC203-011D1 | 2.8346 | 25/32 | 0.079 | 1.2205 | 0.500 | UC203-011D1 | C204D1 | 1.1 |
| 20 | UCC204D1 | 72 | 20 | 2 | 31 | 12.7 | UC204D1 | C204D1 | 0.5 |
| 3/4 | UCC204-012D1 | 2.8346 | 25/32 | 0.079 | 1.2205 | 0.500 | UC204-012D1 | C204D1 | 1.1 |
| 25 | UCC205D1 | 80 | 22 | 2 | 34.1 | 14.3 | UC205D1 | C205D1 | 0.6 |
| 13/16 | UCC205-013D1 | | | | | | UC205-013D1 | C205D1 | |
| 7/8 | UCC205-014D1 | 3.1496 | 55/64 | 0.079 | 1.3425 | 0.563 | UC205-014D1 | C205D1 | 1.3 |
| 15/16 | UCC205-015D1 | | | | | | UC205-015D1 | C205D1 | |
| 1 | UCC205-100D1 | | | | | | UC205-100D1 | C205D1 | |
| 30 | UCC206D1 | 85 | 27 | 2 | 38.1 | 15.9 | UC206D1 | C206D1 | 0.8 |
| 1 1/16 | UCC206-101D1 | | | | | | UC206-101D1 | C206D1 | |
| 1 1/8 | UCC206-102D1 | 3.3465 | 1 1/16 | 0.079 | 1.5000 | 0.626 | UC206-102D1 | C206D1 | 1.8 |
| 1 3/16 | UCC206-103D1 | | | | | | UC206-103D1 | C206D1 | |
| 1 1/4 | UCC206-104D1 | | | | | | UC206-104D1 | C206D1 | |
| 35 | UCC207D1 | 90 | 28 | 2 | 42.9 | 17.5 | UC207D1 | C207D1 | 0.9 |
| 1 1/4 | UCC207-104D1 | | | | | | UC207-104D1 | C207D1 | |
| 1 5/16 | UCC207-105D1 | 3.5433 | 1 7/64 | 0.079 | 1.6890 | 0.689 | UC207-105D1 | C207D1 | 2.0 |
| 1 3/8 | UCC207-106D1 | | | | | | UC207-106D1 | C207D1 | |
| 1 7/16 | UCC207-107D1 | | | | | | UC207-107D1 | C207D1 | |
| 40 | UCC208D1 | 100 | 30 | 2.5 | 49.2 | 19 | UC208D1 | C208D1 | 1.2 |
| 1 1/2 | UCC208-108D1 | 3.9370 | 1 3/16 | 0.098 | 1.9370 | 0.748 | UC208-108D1 | C208D1 | 2.7 |
| 1 9/16 | UCC208-109D1 | | | | | | UC208-109D1 | C208D1 | |
| 45 | UCC209D1 | 110 | 31 | 2.5 | 49.2 | 19 | UC209D1 | C209D1 | 1.5 |
| 1 5/8 | UCC209-110D1 | | | | | | UC209-110D1 | C209D1 | |
| 1 11/16 | UCC209-111D1 | 4.3307 | 1 7/32 | 0.098 | 1.9370 | 0.748 | UC209-111D1 | C209D1 | 3.3 |
| 1 3/4 | UCC209-112D1 | | | | | | UC209-112D1 | C209D1 | |

Remarks: 1) These numbers indicate relubricatable type. If maintenance free type is needed, please order without suffix "D1".
Note: Please refer to page 36 for size of grease fitting.

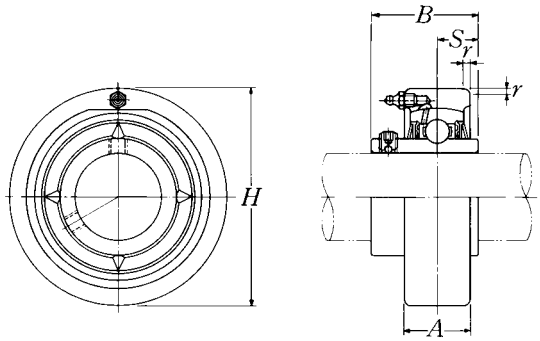


| Shaft dia. mm / inch | Unit number [1] | Nominal dimensions mm / inch H | A | r | B | S | Bearing number | Housing [1] number | Mass of unit kg / lb |
|---|---|---|---|---|---|---|---|---|---|
| **50** | **UCC210D1** | 120 | 33 | 2.5 | 51.6 | 19 | UC210D1 | C210D1 | 1.9 |
| **1 13/16** | **UCC210-113D1** | | | | | | UC210-113D1 | C210D1 | |
| **1 7/8** | **UCC210-114D1** | 4.7244 | 1 19/64 | 0.098 | 2.0315 | 0.748 | UC210-114D1 | C210D1 | 4.2 |
| **1 15/16** | **UCC210-115D1** | | | | | | UC210-115D1 | C210D1 | |
| **2** | **UCC210-200D1** | | | | | | UC210-200D1 | C210D1 | |
| **55** | **UCC211D1** | 125 | 35 | 2.5 | 55.6 | 22.2 | UC211D1 | C211D1 | 2.1 |
| **2** | **UCC211-200D1** | | | | | | UC211-200D1 | C211D1 | |
| **2 1/16** | **UCC211-201D1** | 4.9213 | 1 3/8 | 0.098 | 2.1890 | 0.874 | UC211-201D1 | C211D1 | 4.6 |
| **2 1/8** | **UCC211-202D1** | | | | | | UC211-202D1 | C211D1 | |
| **2 3/16** | **UCC211-203D1** | | | | | | UC211-203D1 | C211D1 | |
| **60** | **UCC212D1** | 130 | 38 | 2.5 | 65.1 | 25.4 | UC212D1 | C212D1 | 2.5 |
| **2 1/4** | **UCC212-204D1** | | | | | | UC212-204D1 | C212D1 | |
| **2 5/16** | **UCC212-205D1** | 5.1181 | 1 1/2 | 0.098 | 2.5630 | 1.000 | UC212-205D1 | C212D1 | 5.5 |
| **2 3/8** | **UCC212-206D1** | | | | | | UC212-206D1 | C212D1 | |
| **2 7/16** | **UCC212-207D1** | | | | | | UC212-207D1 | C212D1 | |
| **65** | **UCC213D1** | 140 | 40 | 3 | 65.1 | 25.4 | UC213D1 | C213D1 | 3.0 |
| **2 1/2** | **UCC213-208D1** | 5.5118 | 1 37/64 | 0.118 | 2.5630 | 1.000 | UC213-208D1 | C213D1 | 6.6 |
| **2 9/16** | **UCC213-209D1** | | | | | | UC213-209D1 | C213D1 | |

## Cartridge units cast housing
## Set screw type

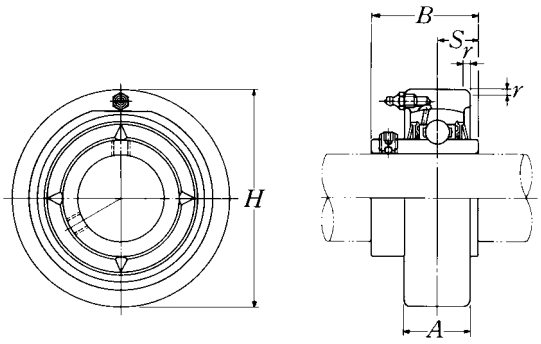


| Shaft dia. mm / inch | Unit number [1] | Nominal dimensions mm / inch H | A | r | B | S | Bearing number | Housing [1] number | Mass of unit kg / lb |
|---|---|---|---|---|---|---|---|---|---|
| **25** | **UCC305D1** | 90 | 26 | 2.5 | 38 | 15 | UC305D1 | C305D1 | 1.0 |
| 13/16 | **UCC305-013D1** | | | | | | UC305-013D1 | C305D1 | |
| 7/8 | **UCC305-014D1** | 3.5433 | 1 1/32 | 0.098 | 1.4961 | 0.591 | UC305-014D1 | C305D1 | 2.2 |
| 15/16 | **UCC305-015D1** | | | | | | UC305-015D1 | C305D1 | |
| **1** | **UCC305-100D1** | | | | | | UC305-100D1 | C305D1 | |
| **30** | **UCC306D1** | 100 | 28 | 2.5 | 43 | 17 | UC306D1 | C306D1 | 1.3 |
| 1 1/16 | **UCC306-101D1** | | | | | | UC306-101D1 | C306D1 | |
| 1 1/8 | **UCC306-102D1** | 3.9370 | 1 7/64 | 0.098 | 1.6929 | 0.669 | UC306-102D1 | C306D1 | 2.9 |
| 1 3/16 | **UCC306-103D1** | | | | | | UC306-103D1 | C306D1 | |
| **35** | **UCC307D1** | 110 | 32 | 3 | 48 | 19 | UC307D1 | C307D1 | 1.7 |
| 1 1/4 | **UCC307-104D1** | | | | | | UC307-104D1 | C307D1 | |
| 1 5/16 | **UCC307-105D1** | 4.3307 | 1 17/64 | 0.118 | 1.8898 | 0.748 | UC307-105D1 | C307D1 | 3.8 |
| 1 3/8 | **UCC307-106D1** | | | | | | UC307-106D1 | C307D1 | |
| 1 7/16 | **UCC307-107D1** | | | | | | UC307-107D1 | C307D1 | |
| **40** | **UCC308D1** | 120 | 34 | 3 | 52 | 19 | UC308D1 | C308D1 | 2.1 |
| 1 1/2 | **UCC308-108D1** | 4.7244 | 1 11/32 | 0.118 | 2.0472 | 0.748 | UC308-108D1 | C308D1 | 4.6 |
| 1 9/16 | **UCC308-109D1** | | | | | | UC308-109D1 | C308D1 | |
| **45** | **UCC309D1** | 130 | 38 | 3.5 | 57 | 22 | UC309D1 | C309D1 | 2.7 |
| 1 5/8 | **UCC309-110D1** | | | | | | UC309-110D1 | C309D1 | |
| 1 11/16 | **UCC309-111D1** | 5.1181 | 1 1/2 | 0.138 | 2.2441 | 0.866 | UC309-111D1 | C309D1 | 6.0 |
| 1 3/4 | **UCC309-112D1** | | | | | | UC309-112D1 | C309D1 | |
| **50** | **UCC310D1** | 140 | 40 | 3.5 | 61 | 22 | UC310D1 | C310D1 | 3.3 |
| 1 13/16 | **UCC310-113D1** | | | | | | UC310-113D1 | C310D1 | |
| 1 7/8 | **UCC310-114D1** | 5.5118 | 1 37/64 | 0.138 | 2.4016 | 0.866 | UC310-114D1 | C310D1 | 7.3 |
| 1 15/16 | **UCC310-115D1** | | | | | | UC310-115D1 | C310D1 | |
| **55** | **UCC311D1** | 150 | 44 | 3.5 | 66 | 25 | UC311D1 | C311D1 | 4.0 |
| **2** | **UCC311-200D1** | | | | | | UC311-200D1 | C311D1 | |
| 2 1/16 | **UCC311-201D1** | 5.9055 | 1 47/64 | 0.138 | 2.5984 | 0.984 | UC311-201D1 | C311D1 | 8.8 |
| 2 1/8 | **UCC311-202D1** | | | | | | UC311-202D1 | C311D1 | |
| 2 3/16 | **UCC311-203D1** | | | | | | UC311-203D1 | C311D1 | |

Remarks: 1) These numbers indicate relubricatable type. If maintenance free type is needed, please order without suffix "D1".
Note: Please refer to page 36 for size of grease fitting.

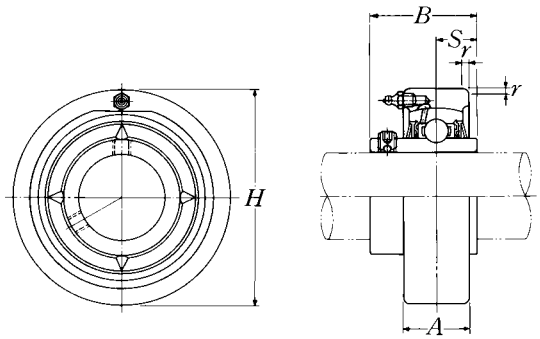


| Shaft dia. mm / inch | Unit number [1] | Nominal dimensions mm / inch H | A | r | B | S | Bearing number | Housing [1] number | Mass of unit kg / lb |
|---|---|---|---|---|---|---|---|---|---|
| 60 | UCC312D1 | 160 | 46 | 3.5 | 71 | 26 | UC312D1 | C312D1 | 4.8 |
| 2 1/4 | UCC312-204D1 | | | | | | UC312-204D1 | C312D1 | |
| 2 5/16 | UCC312-205D1 | 6.2992 | 1 13/16 | 0.138 | 2.7953 | 1.024 | UC312-205D1 | C312D1 | 11 |
| 2 3/8 | UCC312-206D1 | | | | | | UC312-206D1 | C312D1 | |
| 2 7/16 | UCC312-207D1 | | | | | | UC312-207D1 | C312D1 | |
| 65 | UCC313D1 | 170 | 50 | 3.5 | 75 | 30 | UC313D1 | C313D1 | 5.8 |
| 2 1/2 | UCC313-208D1 | 6.6929 | 1 31/32 | 0.138 | 2.9528 | 1.181 | UC313-208D1 | C313D1 | 13 |
| 2 9/16 | UCC313-209D1 | | | | | | UC313-209D1 | C313D1 | |
| 70 | UCC314D1 | 180 | 52 | 4 | 78 | 33 | UC314D1 | C314D1 | 6.8 |
| 2 5/8 | UCC314-210D1 | | | | | | UC314-210D1 | C314D1 | |
| 2 11/16 | UCC314-211D1 | 7.0866 | 2 3/64 | 0.157 | 3.0709 | 1.299 | UC314-211D1 | C314D1 | 15 |
| 2 3/4 | UCC314-212D1 | | | | | | UC314-212D1 | C314D1 | |
| 75 | UCC315D1 | 190 | 55 | 4 | 82 | 32 | UC315D1 | C315D1 | 7.9 |
| 2 13/16 | UCC315-213D1 | | | | | | UC315-213D1 | C315D1 | |
| 2 7/8 | UCC315-214D1 | 7.4803 | 2 11/64 | 0.157 | 3.2283 | 1.260 | UC315-214D1 | C315D1 | 17 |
| 2 15/16 | UCC315-215D1 | | | | | | UC315-215D1 | C315D1 | |
| 3 | UCC315-300D1 | | | | | | UC315-300D1 | C315D1 | |
| 80 | UCC316D1 | 200 | 60 | 4 | 86 | 34 | UC316D1 | C316D1 | 9.3 |
| 3 1/16 | UCC316-301D1 | | | | | | UC316-301D1 | C316D1 | |
| 3 1/8 | UCC316-302D1 | 7.8740 | 2 23/64 | 0.157 | 3.3858 | 1.339 | UC316-302D1 | C316D1 | 21 |
| 3 3/16 | UCC316-303D1 | | | | | | UC316-303D1 | C316D1 | |
| 85 | UCC317D1 | 215 | 64 | 4 | 96 | 40 | UC317D1 | C317D1 | 11 |
| 3 1/4 | UCC317-304D1 | | | | | | UC317-304D1 | C317D1 | |
| 3 5/16 | UCC317-305D1 | 8.4646 | 2 33/64 | 0.157 | 3.7795 | 1.575 | UC317-305D1 | C317D1 | 24 |
| 3 7/16 | UCC317-307D1 | | | | | | UC317-307D1 | C317D1 | |
| 90 | UCC318D1 | 225 | 66 | 4 | 96 | 40 | UC318D1 | C318D1 | 13 |
| 3 1/2 | UCC318-308D1 | 8.8583 | 2 19/32 | 0.157 | 3.7795 | 1.575 | UC318-308D1 | C318D1 | 29 |
| 95 | UCC319D1 | 240 | 72 | 4 | 103 | 41 | UC319D1 | C319D1 | 16 |
| 3 5/8 | UCC319-310D1 | | | | | | UC319-310D1 | C319D1 | |
| 3 11/16 | UCC319-311D1 | 9.4488 | 2 53/64 | 0.157 | 4.0551 | 1.614 | UC319-311D1 | C319D1 | 35 |
| 3 3/4 | UCC319-312D1 | | | | | | UC319-312D1 | C319D1 | |

## Cartridge units cast housing
## Set screw type

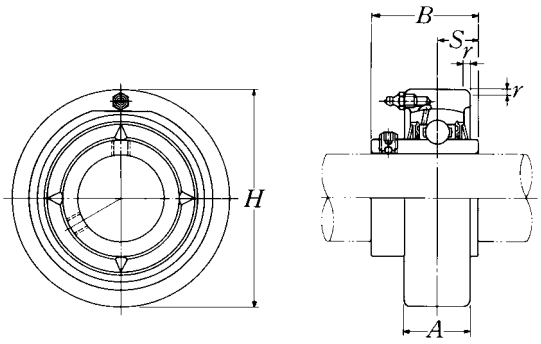


| Shaft dia. mm inch | Unit number [1] | Nominal dimensions mm inch H | A | r | B | S | Bearing number | Housing [1] number | Mass of unit kg lb |
|---|---|---|---|---|---|---|---|---|---|
| **100** | **UCC320D1** | 260 | 75 | 4 | 108 | 42 | UC320D1 | C320D1 | 20 |
| **3 13/16** | **UCC320-313D1** | | | | | | UC320-313D1 | C320D1 | |
| **3 7/8** | **UCC320-314D1** | 10.2362 | 2 61/64 | 0.157 | 4.2520 | 1.654 | UC320-314D1 | C320D1 | 44 |
| **3 15/16** | **UCC320-315D1** | | | | | | UC320-315D1 | C320D1 | |
| **4** | **UCC320-400D1** | | | | | | UC320-400D1 | C320D1 | |
| **105** | **UCC321D1** | 260 | 75 | 4 | 112 | 44 | UC321D1 | C321D1 | 19 |
| **110** | **UCC322D1** | 300 | 80 | 5 | 117 | 46 | UC322D1 | C322D1 | 29 |
| **120** | **UCC324D1** | 320 | 90 | 5 | 126 | 51 | UC324D1 | C324D1 | 36 |
| **130** | **UCC326D1** | 340 | 100 | 5 | 135 | 54 | UC326D1 | C326D1 | 43 |
| **140** | **UCC328D1** | 360 | 100 | 5 | 145 | 59 | UC328D1 | C328D1 | 50 |

Remarks: 1) These numbers indicate relubricatable type. If maintenance free type is needed, please order without suffix "D1".
Note: Please refer to page 36 for size of grease fitting.

## Cartridge units cast housing
## Set screw type

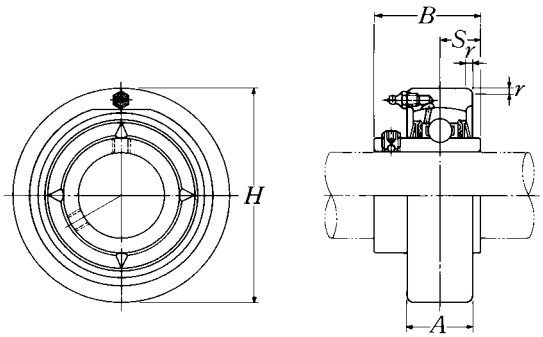


| Shaft dia. mm / inch | Unit number [1] | Nominal dimensions mm / inch H | A | r | B | S | Bearing number | Housing [1] number | Mass of unit kg / lb |
|---|---|---|---|---|---|---|---|---|---|
| **25** | **UCCX05D1** | 90 | 27 | 2 | 38.1 | 15.9 | UCX05D1 | CX05D1 | 1.1 |
| 13/16 | **UCCX05-013D1** | | | | | | UCX05-013D1 | CX05D1 | |
| 7/8 | **UCCX05-014D1** | 3.5433 | 1 1/16 | 0.079 | 1.5000 | 0.626 | UCX05-014D1 | CX05D1 | 2.4 |
| 15/16 | **UCCX05-015D1** | | | | | | UCX05-015D1 | CX05D1 | |
| **1** | **UCCX05-100D1** | | | | | | UCX05-100D1 | CX05D1 | |
| **30** | **UCCX06D1** | 100 | 30 | 2.5 | 42.9 | 17.5 | UCX06D1 | CX06D1 | 1.6 |
| 1 1/16 | **UCCX06-101D1** | | | | | | UCX06-101D1 | CX06D1 | |
| 1 1/8 | **UCCX06-102D1** | 3.9370 | 1 3/16 | 0.098 | 1.6890 | 0.689 | UCX06-102D1 | CX06D1 | 3.5 |
| 1 3/16 | **UCCX06-103D1** | | | | | | UCX06-103D1 | CX06D1 | |
| 1 1/4 | **UCCX06-104D1** | | | | | | UC207-104D1 | CX06D1 | |
| **35** | **UCCX07D1** | 110 | 34 | 2.5 | 49.2 | 19 | UCX07D1 | CX07D1 | 1.8 |
| 1 5/16 | **UCCX07-105D1** | | | | | | UCX07-105D1 | CX07D1 | |
| 1 3/8 | **UCCX07-106D1** | 4.3307 | 1 11/32 | 0.098 | 1.9370 | 0.748 | UCX07-106D1 | CX07D1 | 4.0 |
| 1 7/16 | **UCCX07-107D1** | | | | | | UCX07-107D1 | CX07D1 | |
| **40** | **UCCX08D1** | 120 | 38 | 2.5 | 49.2 | 19 | UCX08D1 | CX08D1 | 2.5 |
| 1 1/2 | **UCCX08-108D1** | 4.7244 | 1 1/2 | 0.098 | 1.9370 | 0.748 | UCX08-108D1 | CX08D1 | 5.5 |
| 1 9/16 | **UCCX08-109D1** | | | | | | UCX08-109D1 | CX08D1 | |
| **45** | **UCCX09D1** | 120 | 38 | 2.5 | 51.6 | 19 | UCX09D1 | CX09D1 | 2.2 |
| 1 5/8 | **UCCX09-110D1** | | | | | | UCX09-110D1 | CX09D1 | |
| 1 11/16 | **UCCX09-111D1** | 4.7244 | 1 1/2 | 0.098 | 2.0315 | 0.748 | UCX09-111D1 | CX09D1 | 4.9 |
| 1 3/4 | **UCCX09-112D1** | | | | | | UCX09-112D1 | CX09D1 | |
| 1 13/16 | **UCCX09-113D1** | | | | | | UC210-113D1 | CX09D1 | |
| **50** | **UCCX10D1** | 130 | 40 | 2.5 | 55.6 | 22.2 | UCX10D1 | CX10D1 | 2.7 |
| 1 7/8 | **UCCX10-114D1** | | | | | | UCX10-114D1 | CX10D1 | |
| 1 15/16 | **UCCX10-115D1** | 5.1181 | 1 37/64 | 0.098 | 2.1890 | 0.874 | UCX10-115D1 | CX10D1 | 6.0 |
| **2** | **UCCX10-200D1** | | | | | | UC211-200D1 | CX10D1 | |

Remarks: 1) These numbers indicate relubricatable type. If maintenance free type is needed, please order without suffix "D1".
Note: Please refer to page 36 for size of grease fitting.

## Cartridge units cast housing
## Set screw type

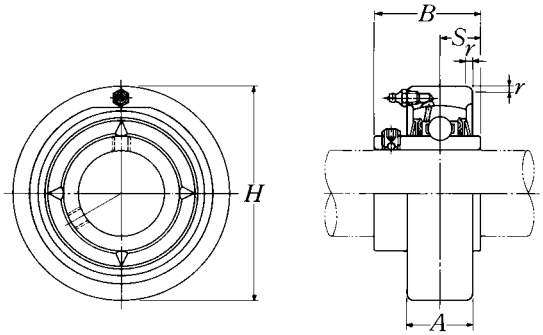


| Shaft dia. mm / inch | Unit number 1) | Nominal dimensions mm / inch H | A | r | B | S | Bearing number | Housing 1) number | Mass of unit kg / lb |
|---|---|---|---|---|---|---|---|---|---|
| 55 | UCCX11D1 | 150 | 42 | 3 | 65.1 | 25.4 | UCX11D1 | CX11D1 | 4.1 |
| 2 1/16 | UCCX11-201D1 | | | | | | UCX11-201D1 | CX11D1 | |
| 2 1/8 | UCCX11-202D1 | | | | | | UCX11-202D1 | CX11D1 | |
| 2 3/16 | UCCX11-203D1 | 5.9055 | 1 21/32 | 0.118 | 2.5630 | 1.000 | UCX11-203D1 | CX11D1 | 9.0 |
| 2 1/4 | UCCX11-204D1 | | | | | | UC212-204D1 | CX11D1 | |
| 2 5/16 | UCCX11-205D1 | | | | | | UC212-205D1 | CX11D1 | |
| 60 | UCCX12D1 | 160 | 44 | 3 | 65.1 | 25.4 | UCX12D1 | CX12D1 | 3.9 |
| 2 3/8 | UCCX12-206D1 | 6.2992 | 1 47/64 | 0.118 | 2.5630 | 1.000 | UCX12-206D1 | CX12D1 | 8.6 |
| 2 7/16 | UCCX12-207D1 | | | | | | UCX12-207D1 | CX12D1 | |

Remarks: 1) These numbers indicate relubricatable type. If maintenance free type is needed, please order without suffix "D1".
Note: Please refer to page 36 for size of grease fitting.

## Mini stretcher units®
## Set screw type

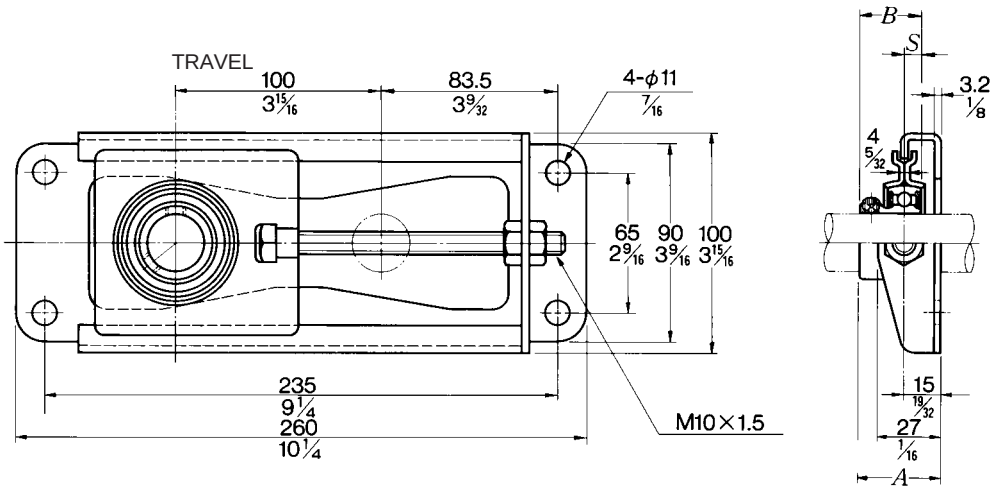


| Shaft dia. mm / inch | Unit number | Nominal dimensions mm / inch A | B | S | Bolt size mm / inch | Max. load 1) recommended N / lbf | Bearing number | Mass of unit kg / lb |
|---|---|---|---|---|---|---|---|---|
| **12** | **ASPT201-10** | 31 | 22 | 6 | M10 | 3 500 | AS201 | 1.1 |
| 1/2 | **ASPT201-008-10** | 1 7/32 | 0.8661 | 0.236 | 3/8 | 770 | AS201-008 | 2.4 |
| **15** | **ASPT202-10** | 31 | 22 | 6 | M10 | 3 500 | AS202 | 1.1 |
| 9/16 | **ASPT202-009-10** | 1 7/32 | 0.8661 | 0.236 | 3/8 | 770 | AS202-009 | 2.4 |
| 5/8 | **ASPT202-010-10** | | | | | | AS202-010 | |
| **17** | **ASPT203-10** | 31 | 22 | 6 | M10 | 3 500 | AS203 | 1.1 |
| 11/16 | **ASPT203-011-10** | 1 7/32 | 0.8661 | 0.236 | 3/8 | 770 | AS203-011 | 2.4 |
| **20** | **ASPT204-10** | 33 | 25 | 7 | M10 | 3 500 | AS204 | 1.1 |
| 3/4 | **ASPT204-012-10** | 1 19/64 | 0.9843 | 0.276 | 3/8 | 770 | AS204-012 | 2.4 |
| **25** | **ASPT205-10** | 34.5 | 27 | 7.5 | M10 | 3 500 | AS205 | 1.1 |
| 13/16 | **ASPT205-013-10** | 1 23/64 | 1.0630 | 0.295 | 3/8 | 770 | AS205-013 | 2.4 |
| 7/8 | **ASPT205-014-10** | | | | | | AS205-014 | |
| 15/16 | **ASPT205-015-10** | | | | | | AS205-015 | |
| **1** | **ASPT205-100-10** | | | | | | AS205-100 | |

Remarks: 1) The Stretcher Unit is designed to only take a horizontal radial load, in line with the adjustment direction. Axial loads or vertical radical loads can deform or break the housing.

## Pillow blocks cast housing
## Eccentric locking collar type

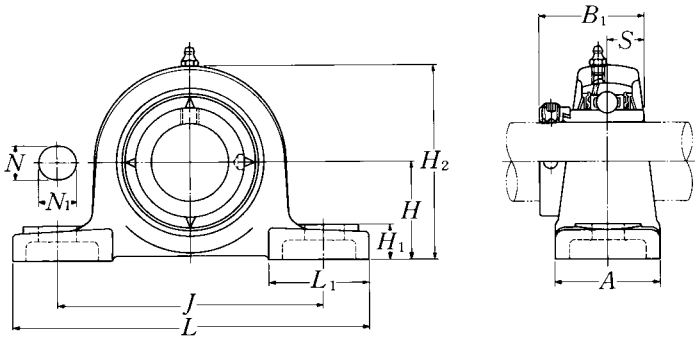


| Shaft dia. mm / inch | Unit number [1] | Nominal dimensions mm / inch H | L | J | A | N | N1 | H1 | H2 | L1 | B1 | S | Bolt size mm / inch |
|---|---|---|---|---|---|---|---|---|---|---|---|---|---|
| 20 | UELP204D1W3 | 33.3 | 127 | 95 | 38 | 13 | 16 | 14 | 65 | 42 | 43.7 | 17.1 | M10 |
| 3/4 | UELP204-012D1W3 | 1 5/16 | 5 | 3 3/4 | 1 1/2 | 1/2 | 5/8 | 9/16 | 2 9/16 | 1 21/32 | 1.720 | 0.673 | 3/8 |
| 25 | UELP205D1W3 | 36.5 | 140 | 105 | 38 | 13 | 16 | 15 | 71 | 42 | 44.4 | 17.45 | M10 |
| 13/16 | UELP205-013D1W3 | | | | | | | | | | | | |
| 7/8 | UELP205-014D1W3 | 1 7/16 | 5 1/2 | 4 1/8 | 1 1/2 | 1/2 | 5/8 | 19/32 | 2 25/32 | 1 21/32 | 1.748 | 0.687 | 3/8 |
| 15/16 | UELP205-015D1W3 | | | | | | | | | | | | |
| 1 | UELP205-100D1W3 | | | | | | | | | | | | |
| 30 | UELP206D1W3 | 42.9 | 165 | 121 | 48 | 17 | 20 | 17 | 83 | 54 | 48.4 | 18.25 | M14 |
| 1 1/16 | UELP206-101D1W3 | | | | | | | | | | | | |
| 1 1/8 | UELP206-102D1W3 | 1 11/16 | 6 1/2 | 4 3/4 | 1 7/8 | 21/32 | 25/32 | 21/32 | 3 9/32 | 2 1/8 | 1.906 | 0.719 | 1/2 |
| 1 3/16 | UELP206-103D1W3 | | | | | | | | | | | | |
| 1 1/4 | UELP206-104D1W3 | | | | | | | | | | | | |
| 35 | UELP207D1W3 | 47.6 | 167 | 127 | 48 | 17 | 20 | 18 | 93 | 54 | 51.1 | 18.8 | M14 |
| 1 1/4 | UELP207-104D1W3 | | | | | | | | | | | | |
| 1 5/16 | UELP207-105D1W3 | 1 7/8 | 6 9/16 | 5 | 1 7/8 | 21/32 | 25/32 | 23/32 | 3 21/32 | 2 1/8 | 2.012 | 0.740 | 1/2 |
| 1 3/8 | UELP207-106D1W3 | | | | | | | | | | | | |
| 1 7/16 | UELP207-107D1W3 | | | | | | | | | | | | |
| 40 | UELP208D1W3 | 49.2 | 184 | 137 | 54 | 17 | 20 | 18 | 98 | 52 | 56.3 | 21.4 | M14 |
| 1 1/2 | UELP208-108D1W3 | 1 15/16 | 7 1/4 | 5 13/32 | 2 1/8 | 21/32 | 25/32 | 23/32 | 3 27/32 | 2 1/16 | 2.217 | 0.843 | 1/2 |
| 1 9/16 | UELP208-109D1W3 | | | | | | | | | | | | |
| 45 | UELP209D1W3 | 54 | 190 | 146 | 54 | 17 | 20 | 20 | 106 | 60 | 56.3 | 21.4 | M14 |
| 1 5/8 | UELP209-110D1W3 | | | | | | | | | | | | |
| 1 11/16 | UELP209-111D1W3 | 2 1/8 | 7 15/32 | 5 3/4 | 2 1/8 | 21/32 | 25/32 | 25/32 | 4 3/16 | 2 3/8 | 2.217 | 0.843 | 1/2 |
| 1 3/4 | UELP209-112D1W3 | | | | | | | | | | | | |
| 50 | UELP210D1W3 | 57.2 | 206 | 159 | 60 | 20 | 23 | 21 | 114 | 65 | 62.7 | 24.6 | M16 |
| 1 13/16 | UELP210-113D1W3 | | | | | | | | | | | | |
| 1 7/8 | UELP210-114D1W3 | 2 1/4 | 8 1/8 | 6 1/4 | 2 3/8 | 25/32 | 29/32 | 13/16 | 4 1/2 | 2 9/16 | 2.469 | 0.969 | 5/8 |
| 1 15/16 | UELP210-115D1W3 | | | | | | | | | | | | |
| 2 | UELP210-200D1W3 | | | | | | | | | | | | |

Remarks: 1) These numbers indicate relubricatable type. If maintenance free type is needed, please order without suffix "D1".
Note: Please refer to page 36 for size of grease fitting.

| Bearing number | Housing [1] number | Mass of unit kg lb |
|---|---|---|
| UEL204D1W3 | P204D1 | 0.8 |
| UEL204-012D1W3 | P204D1 | 1.8 |
| UEL205D1W3 | P205D1 | 0.9 |
| UEL205-013D1W3 | P205D1 | 2.0 |
| UEL205-014D1W3 | P205D1 | |
| UEL205-015D1W3 | P205D1 | |
| UEL205-100D1W3 | P205D1 | |
| UEL206D1W3 | P206D1 | 1.5 |
| UEL206-101D1W3 | P206D1 | 3.3 |
| UEL206-102D1W3 | P206D1 | |
| UEL206-103D1W3 | P206D1 | |
| UEL206-104D1W3 | P206D1 | |
| UEL207D1W3 | P207D1 | 1.8 |
| UEL207-104D1W3 | P207D1 | 4.0 |
| UEL207-105D1W3 | P207D1 | |
| UEL207-106D1W3 | P207D1 | |
| UEL207-107D1W3 | P207D1 | |
| UEL208D1W3 | P208D1 | 2.1 |
| UEL208-108D1W3 | P208D1 | 4.6 |
| UEL208-109D1W3 | P208D1 | |
| UEL209D1W3 | P209D1 | 2.3 |
| UEL209-110D1W3 | P209D1 | 5.1 |
| UEL209-111D1W3 | P209D1 | |
| UEL209-112D1W3 | P209D1 | |
| UEL210D1W3 | P210D1 | 2.9 |
| UEL210-113D1W3 | P210D1 | 6.4 |
| UEL210-114D1W3 | P210D1 | |
| UEL210-115D1W3 | P210D1 | |
| UEL210-200D1W3 | P210D1 | |

## Pillow blocks cast housing
## Eccentric locking collar type

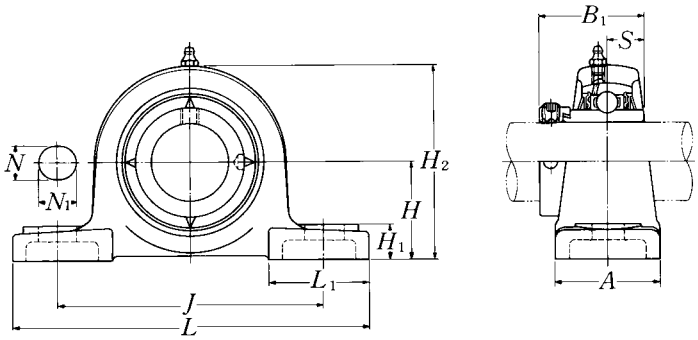


| Shaft dia. mm / inch | Unit number [1] | Nominal dimensions mm / inch H | L | J | A | N | N1 | H1 | H2 | L1 | B1 | S | Bolt size mm / inch |
|---|---|---|---|---|---|---|---|---|---|---|---|---|---|
| 55 | UELP211D1W3 | 63.5 | 219 | 171 | 60 | 20 | 23 | 23 | 126 | 65 | 71.4 | 27.75 | M16 |
| 2 | UELP211-200D1W3 | | | | | | | | | | | | |
| 2 1/16 | UELP211-201D1W3 | 2 1/2 | 8 5/8 | 6 23/32 | 2 3/8 | 25/32 | 29/32 | 29/32 | 4 31/32 | 2 9/16 | 2.811 | 1.093 | 5/8 |
| 2 1/8 | UELP211-202D1W3 | | | | | | | | | | | | |
| 2 3/16 | UELP211-203D1W3 | | | | | | | | | | | | |
| 60 | UELP212D1W3 | 69.8 | 241 | 184 | 70 | 20 | 23 | 25 | 138 | 70 | 77.8 | 30.95 | M16 |
| 2 1/4 | UELP212-204D1W3 | | | | | | | | | | | | |
| 2 5/16 | UELP212-205D1W3 | 2 3/4 | 9 1/2 | 7 1/4 | 2 3/4 | 25/32 | 29/32 | 31/32 | 5 7/16 | 2 3/4 | 3.063 | 1.219 | 5/8 |
| 2 3/8 | UELP212-206D1W3 | | | | | | | | | | | | |
| 2 7/16 | UELP212-207D1W3 | | | | | | | | | | | | |
| 65 | UELP213D1W3 | 76.2 | 265 | 203 | 70 | 25 | 28 | 27 | 151 | 77 | 85.7 | 34.15 | M20 |
| 2 1/2 | UELP213-208D1W3 | 3 | 10 7/16 | 8 | 2 3/4 | 31/32 | 1 3/32 | 1 1/16 | 5 15/16 | 3 1/32 | 3.374 | 1.344 | 3/4 |
| 2 9/16 | UELP213-209D1W3 | | | | | | | | | | | | |
| 70 | UELP214D1W3 | 79.4 | 266 | 210 | 72 | 25 | 28 | 27 | 157 | 77 | 85.7 | 34.15 | M20 |
| 2 5/8 | UELP214-210D1W3 | | | | | | | | | | | | |
| 2 11/16 | UELP214-211D1W3 | 3 1/8 | 10 15/32 | 8 9/32 | 2 27/32 | 31/32 | 1 3/32 | 1 1/16 | 6 3/16 | 3 1/32 | 3.374 | 1.344 | 3/4 |
| 2 3/4 | UELP214-212D1W3 | | | | | | | | | | | | |
| 75 | UELP215D1W3 | 82.6 | 275 | 217 | 74 | 25 | 28 | 28 | 163 | 80 | 92 | 37.3 | M20 |
| 2 13/16 | UELP215-213D1W3 | | | | | | | | | | | | |
| 2 7/8 | UELP215-214D1W3 | 3 1/4 | 10 13/16 | 8 17/32 | 2 29/32 | 31/32 | 1 3/32 | 1 3/32 | 6 13/32 | 3 5/32 | 3.622 | 1.469 | 3/4 |
| 2 15/16 | UELP215-215D1W3 | | | | | | | | | | | | |
| 3 | UELP215-300D1W3 | | | | | | | | | | | | |

Remarks: 1) These numbers indicate relubricatable type. If maintenance free type is needed, please order without suffix "D1".
Note: Please refer to page 36 for size of grease fitting.

| Bearing number | Housing [1)] number | Mass of unit kg | lb |
|---|---|---|---|
| UEL211D1W3 | P211D1 | 3.7 | |
| UEL211-200D1W3 | P211D1 | | |
| UEL211-201D1W3 | P211D1 | 8.2 | |
| UEL211-202D1W3 | P211D1 | | |
| UEL211-203D1W3 | P211D1 | | |
| UEL212D1W3 | P212D1 | 5.0 | |
| UEL212-204D1W3 | P212D1 | | |
| UEL212-205D1W3 | P212D1 | 11 | |
| UEL212-206D1W3 | P212D1 | | |
| UEL212-207D1W3 | P212D1 | | |
| UEL213D1W3 | P213D1 | 6.2 | |
| UEL213-208D1W3 | P213D1 | 14 | |
| UEL213-209D1W3 | P213D1 | | |
| UEL214D1W3 | P214D1 | 6.9 | |
| UEL214-210D1W3 | P214D1 | | |
| UEL214-211D1W3 | P214D1 | 15 | |
| UEL214-212D1W3 | P214D1 | | |
| UEL215D1W3 | P215D1 | 7.6 | |
| UEL215-213D1W3 | P215D1 | | |
| UEL215-214D1W3 | P215D1 | 17 | |
| UEL215-215D1W3 | P215D1 | | |
| UEL215-300D1W3 | P215D1 | | |

## Pillow blocks cast housing
## Eccentric locking collar type

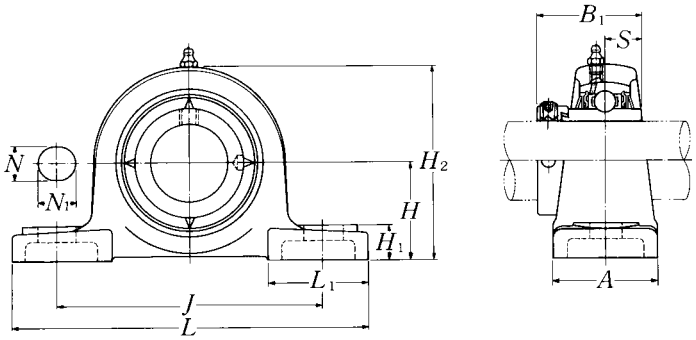


| Shaft dia. mm / inch | Unit number [1] | Nominal dimensions mm / inch H | L | J | A | N | N1 | H1 | H2 | L1 | B1 | S | Bolt size mm / inch |
|---|---|---|---|---|---|---|---|---|---|---|---|---|---|
| 25 | UELP305D1W3 | 45 | 175 | 132 | 45 | 17 | 20 | 15 | 85 | 54 | 46.8 | 16.7 | M14 |
| 13/16 | UELP305-013D1W3 | | | | | | | | | | | | |
| 7/8 | UELP305-014D1W3 | 1 49/64 | 6 7/8 | 5 3/16 | 1 25/32 | 21/32 | 25/32 | 19/32 | 3 11/32 | 2 1/8 | 1.843 | 0.657 | 1/2 |
| 15/16 | UELP305-015D1W3 | | | | | | | | | | | | |
| 1 | UELP305-100D1W3 | | | | | | | | | | | | |
| 30 | UELP306D1W3 | 50 | 180 | 140 | 50 | 17 | 20 | 18 | 95 | 54 | 50 | 17.5 | M14 |
| 1 1/16 | UELP306-101D1W3 | | | | | | | | | | | | |
| 1 1/8 | UELP306-102D1W3 | 1 31/32 | 7 3/32 | 5 1/2 | 1 31/32 | 21/32 | 25/32 | 23/32 | 3 3/4 | 2 1/8 | 1.969 | 0.689 | 1/2 |
| 1 3/16 | UELP306-103D1W3 | | | | | | | | | | | | |
| 35 | UELP307D1W3 | 56 | 210 | 160 | 56 | 17 | 25 | 20 | 106 | 60 | 51.6 | 18.3 | M14 |
| 1 1/4 | UELP307-104D1W3 | | | | | | | | | | | | |
| 1 5/16 | UELP307-105D1W3 | 2 13/64 | 8 9/32 | 6 5/16 | 2 7/32 | 21/32 | 31/32 | 25/32 | 4 3/16 | 2 3/8 | 2.031 | 0.720 | 1/2 |
| 1 3/8 | UELP307-106D1W3 | | | | | | | | | | | | |
| 1 7/16 | UELP307-107D1W3 | | | | | | | | | | | | |
| 40 | UELP308D1W3 | 60 | 220 | 170 | 60 | 17 | 27 | 22 | 116 | 60 | 57.1 | 19.8 | M14 |
| 1 1/2 | UELP308-108D1W3 | 2 23/64 | 8 21/32 | 6 11/16 | 2 3/8 | 21/32 | 1 1/16 | 7/8 | 4 9/16 | 2 3/8 | 2.248 | 0.780 | 1/2 |
| 1 9/16 | UELP308-109D1W3 | | | | | | | | | | | | |
| 45 | UELP309D1W3 | 67 | 245 | 190 | 67 | 20 | 30 | 24 | 129 | 65 | 58.7 | 19.8 | M16 |
| 1 5/8 | UELP309-110D1W3 | | | | | | | | | | | | |
| 1 11/16 | UELP309-111D1W3 | 2 41/64 | 9 21/32 | 7 15/32 | 2 5/8 | 25/32 | 1 3/16 | 15/16 | 5 3/32 | 2 9/16 | 2.311 | 0.780 | 5/8 |
| 1 3/4 | UELP309-112D1W3 | | | | | | | | | | | | |
| 50 | UELP310D1W3 | 75 | 275 | 212 | 75 | 20 | 35 | 27 | 143 | 75 | 66.6 | 24.6 | M16 |
| 1 13/16 | UELP310-113D1W3 | | | | | | | | | | | | |
| 1 7/8 | UELP310-114D1W3 | 2 61/64 | 10 13/16 | 8 11/32 | 2 15/16 | 25/32 | 1 3/8 | 1 1/16 | 5 5/8 | 2 15/16 | 2.622 | 0.969 | 5/8 |
| 1 15/16 | UELP310-115D1W3 | | | | | | | | | | | | |
| 55 | UELP311D1W3 | 80 | 310 | 236 | 80 | 20 | 38 | 30 | 154 | 85 | 73 | 27.8 | M16 |
| 2 | UELP311-200D1W3 | | | | | | | | | | | | |
| 2 1/16 | UELP311-201D1W3 | 3 5/32 | 12 7/32 | 9 9/32 | 3 5/32 | 25/32 | 1 1/2 | 1 3/16 | 6 1/16 | 3 11/32 | 2.874 | 1.094 | 5/8 |
| 2 1/8 | UELP311-202D1W3 | | | | | | | | | | | | |
| 2 3/16 | UELP311-203D1W3 | | | | | | | | | | | | |

Remarks: 1) These numbers indicate relubricatable type. If maintenance free type is needed, please order without suffix "D1".
Note: Please refer to page 36 for size of grease fitting.

| Bearing number | Housing [1] number | Mass of unit kg lb |
|---|---|---|
| UEL305D1W3 | P305D1 | 1.5 |
| UEL305-013D1W3 | P305D1 | |
| UEL305-014D1W3 | P305D1 | 3.3 |
| UEL305-015D1W3 | P305D1 | |
| UEL305-100D1W3 | P305D1 | |
| UEL306D1W3 | P306D1 | 1.9 |
| UEL306-101D1W3 | P306D1 | |
| UEL306-102D1W3 | P306D1 | 4.2 |
| UEL306-103D1W3 | P306D1 | |
| UEL307D1W3 | P307D1 | 2.6 |
| UEL307-104D1W3 | P307D1 | |
| UEL307-105D1W3 | P307D1 | 5.7 |
| UEL307-106D1W3 | P307D1 | |
| UEL307-107D1W3 | P307D1 | |
| UEL308D1W3 | P308D1 | 3.2 |
| UEL308-108D1W3 | P308D1 | 7.1 |
| UEL308-109D1W3 | P308D1 | |
| UEL309D1W3 | P309D1 | 4.2 |
| UEL309-110D1W3 | P309D1 | |
| UEL309-111D1W3 | P309D1 | 9.3 |
| UEL309-112D1W3 | P309D1 | |
| UEL310D1W3 | P310D1 | 5.8 |
| UEL310-113D1W3 | P310D1 | |
| UEL310-114D1W3 | P310D1 | 13 |
| UEL310-115D1W3 | P310D1 | |
| UEL311D1W3 | P311D1 | 7.6 |
| UEL311-200D1W3 | P311D1 | |
| UEL311-201D1W3 | P311D1 | 17 |
| UEL311-202D1W3 | P311D1 | |
| UEL311-203D1W3 | P311D1 | |

## Pillow blocks cast housing
## Eccentric locking collar type

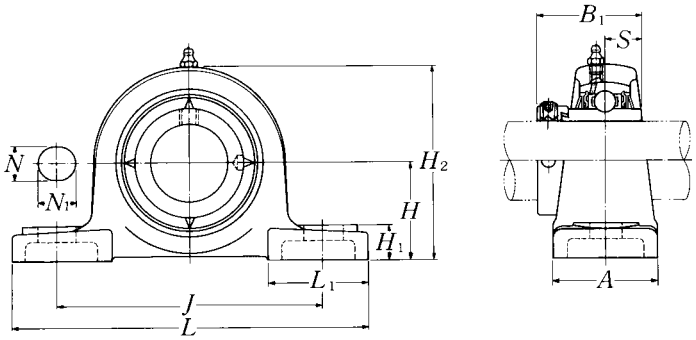


| Shaft dia. mm / inch | Unit number [1] | Nominal dimensions mm / inch H | L | J | A | N | N1 | H1 | H2 | L1 | B1 | S | Bolt size mm / inch |
|---|---|---|---|---|---|---|---|---|---|---|---|---|---|
| 60 | UELP312D1W3 | 85 | 330 | 250 | 85 | 25 | 38 | 32 | 165 | 95 | 79.4 | 30.95 | M20 |
| 2 1/4 | UELP312-204D1W3 | | | | | | | | | | | | |
| 2 5/16 | UELP312-205D1W3 | 3 11/32 | 13 | 9 27/32 | 3 11/32 | 31/32 | 1 1/2 | 1 1/4 | 6 1/2 | 3 3/4 | 3.126 | 1.219 | 3/4 |
| 2 3/8 | UELP312-206D1W3 | | | | | | | | | | | | |
| 2 7/16 | UELP312-207D1W3 | | | | | | | | | | | | |
| 65 | UELP313D1W3 | 90 | 340 | 260 | 90 | 25 | 38 | 33 | 176 | 105 | 85.7 | 32.55 | M20 |
| 2 1/2 | UELP313-208D1W3 | 3 35/64 | 13 3/8 | 10 1/4 | 3 17/32 | 31/32 | 1 1/2 | 1 5/16 | 6 15/16 | 4 1/8 | 3.374 | 1.281 | 3/4 |
| 2 9/16 | UELP313-209D1W3 | | | | | | | | | | | | |
| 70 | UELP314D1W3 | 95 | 360 | 280 | 90 | 27 | 40 | 35 | 187 | 105 | 92.1 | 34.15 | M22 |
| 2 5/8 | UELP314-210D1W3 | | | | | | | | | | | | |
| 2 11/16 | UELP314-211D1W3 | 3 47/64 | 14 3/16 | 11 1/32 | 3 17/32 | 1 1/16 | 1 9/16 | 1 3/8 | 7 3/8 | 4 1/8 | 3.626 | 1.344 | 7/8 |
| 2 3/4 | UELP314-212D1W3 | | | | | | | | | | | | |
| 75 | UELP315D1W3 | 100 | 380 | 290 | 100 | 27 | 40 | 35 | 198 | 110 | 100 | 37.3 | M22 |
| 2 13/16 | UELP315-213D1W3 | | | | | | | | | | | | |
| 2 7/8 | UELP315-214D1W3 | 3 15/16 | 14 31/32 | 11 13/32 | 3 15/16 | 1 1/16 | 1 9/16 | 1 3/8 | 7 25/32 | 4 11/32 | 3.937 | 1.469 | 7/8 |
| 2 15/16 | UELP315-215D1W3 | | | | | | | | | | | | |
| 3 | UELP315-300D1W3 | | | | | | | | | | | | |
| 80 | UELP316D1W3 | 106 | 400 | 300 | 110 | 27 | 40 | 40 | 210 | 110 | 106.4 | 40.5 | M22 |
| 3 1/16 | UELP316-301D1W3 | | | | | | | | | | | | |
| 3 1/8 | UELP316-302D1W3 | 4 11/64 | 15 3/4 | 11 13/16 | 4 11/32 | 1 1/16 | 1 9/16 | 1 9/16 | 8 9/32 | 4 11/32 | 4.189 | 1.594 | 7/8 |
| 3 3/16 | UELP316-303D1W3 | | | | | | | | | | | | |
| 85 | UELP317D1W3 | 112 | 420 | 320 | 110 | 33 | 45 | 40 | 220 | 120 | 109.5 | 42.05 | M27 |
| 3 1/4 | UELP317-304D1W3 | | | | | | | | | | | | |
| 3 5/16 | UELP317-305D1W3 | 4 13/32 | 16 17/32 | 12 19/32 | 4 11/32 | 1 5/16 | 1 25/32 | 1 9/16 | 8 21/32 | 4 23/32 | 4.311 | 1.656 | 1 |
| 3 7/16 | UELP317-307D1W3 | | | | | | | | | | | | |
| 90 | UELP318D1W3 | 118 | 430 | 330 | 110 | 33 | 45 | 45 | 235 | 120 | 115.9 | 43.65 | M27 |
| 3 7/16 | UELP318-307D1W3 | 4 41/64 | 16 15/16 | 13 | 4 11/32 | 1 5/16 | 1 25/32 | 1 25/32 | 9 1/4 | 4 23/32 | 4.563 | 1.719 | 1 |
| 3 1/2 | UELP318-308D1W3 | | | | | | | | | | | | |

Remarks: 1) These numbers indicate relubricatable type. If maintenance free type is needed, please order without suffix "D1".
Note: Please refer to page 36 for size of grease fitting.

| Bearing number | Housing [1] number | Mass of unit kg | lb |
|---|---|---|---|
| UEL312D1W3 | P312D1 | 9.7 | |
| UEL312-204D1W3 | P312D1 | | |
| UEL312-205D1W3 | P312D1 | 21 | |
| UEL312-206D1W3 | P312D1 | | |
| UEL312-207D1W3 | P312D1 | | |
| UEL313D1W3 | P313D1 | 11 | |
| UEL313-208D1W3 | P313D1 | 24 | |
| UEL313-209D1W3 | P313D1 | | |
| UEL314D1W3 | P314D1 | 12 | |
| UEL314-210D1W3 | P314D1 | | |
| UEL314-211D1W3 | P314D1 | 26 | |
| UEL314-212D1W3 | P314D1 | | |
| UEL315D1W3 | P315D1 | 15 | |
| UEL315-213D1W3 | P315D1 | | |
| UEL315-214D1W3 | P315D1 | 33 | |
| UEL315-215D1W3 | P315D1 | | |
| UEL315-300D1W3 | P315D1 | | |
| UEL316D1W3 | P316D1 | 18 | |
| UEL316-301D1W3 | P316D1 | | |
| UEL316-302D1W3 | P316D1 | 40 | |
| UEL316-303D1W3 | P316D1 | | |
| UEL317D1W3 | P317D1 | 21 | |
| UEL317-304D1W3 | P317D1 | | |
| UEL317-305D1W3 | P317D1 | 46 | |
| UEL317-307D1W3 | P317D1 | | |
| UEL318D1W3 | P318D1 | 23 | |
| UEL318-307D1W3 | P318D1 | 51 | |
| UEL318-308D1W3 | P318D1 | | |

## Pillow blocks cast housing
## Eccentric locking collar type

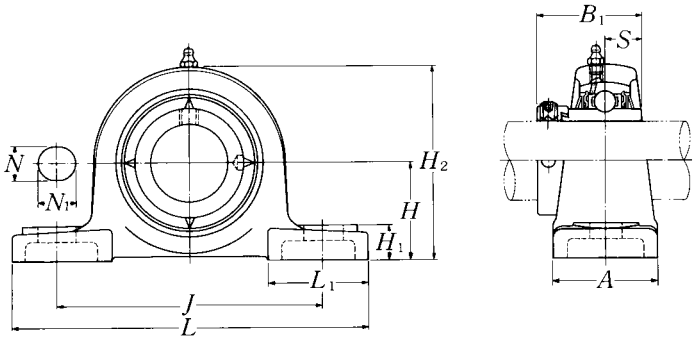


| Shaft dia. mm / inch | Unit number [1] | Nominal dimensions mm / inch H | L | J | A | N | N1 | H1 | H2 | L1 | B1 | S | Bolt size mm / inch |
|---|---|---|---|---|---|---|---|---|---|---|---|---|---|
| 95 | UELP319D1W3 | 125 | 470 | 360 | 120 | 36 | 50 | 45 | 250 | 125 | 122.3 | 38.9 | M30 |
| 3 5/8 | UELP319-310D1W3 | | | | | | | | | | | | |
| 3 11/16 | UELP319-311D1W3 | 4 59/64 | 18 1/2 | 14 3/16 | 4 23/32 | 1 13/32 | 1 31/32 | 1 25/32 | 9 27/32 | 4 29/32 | 4.815 | 1.531 | 1 1/8 |
| 3 3/4 | UELP319-312D1W3 | | | | | | | | | | | | |
| 100 | UELP320D1W3 | 140 | 490 | 380 | 120 | 36 | 50 | 50 | 275 | 130 | 128.6 | 50 | M30 |
| 3 13/16 | UELP320-313D1W3 | | | | | | | | | | | | |
| 3 7/8 | UELP320-314D1W3 | 5 33/64 | 19 9/32 | 14 31/32 | 4 23/32 | 1 13/32 | 1 31/32 | 1 31/32 | 10 13/16 | 5 1/8 | 5.063 | 1.969 | 1 1/8 |
| 3 15/16 | UELP320-315D1W3 | | | | | | | | | | | | |
| 4 | UELP320-400D1W3 | | | | | | | | | | | | |
| 105 | UELP321D1W3 | 140 | 490 | 380 | 120 | 36 | 50 | 50 | 280 | 130 | 139.7 | 48.4 | M30 |
| 110 | UELP322D1W3 | 150 | 520 | 400 | 140 | 40 | 55 | 55 | 300 | 135 | 141.3 | 49.2 | M33 |

Remarks: 1) These numbers indicate relubricatable type. If maintenance free type is needed, please order without suffix "D1".
Note: Please refer to page 36 for size of grease fitting.

| Bearing number | Housing [1] number | Mass of unit kg | lb |
|---|---|---|---|
| UEL319D1W3 | P319D1 | 28 | |
| UEL319-310D1W3 | P319D1 | | |
| UEL319-311D1W3 | P319D1 | 66 | |
| UEL319-312D1W3 | P319D1 | | |
| UEL320D1W3 | P320D1 | 35 | |
| UEL320-313D1W3 | P320D1 | | |
| UEL320-314D1W3 | P320D1 | 82 | |
| UEL320-315D1W3 | P320D1 | | |
| UEL320-400D1W3 | P320D1 | | |
| UEL321D1W3 | P321D1 | 37 | |
| UEL322D1W3 | P322D1 | 46 | |

## Pillow blocks cast housing low center height
## Eccentric locking collar type

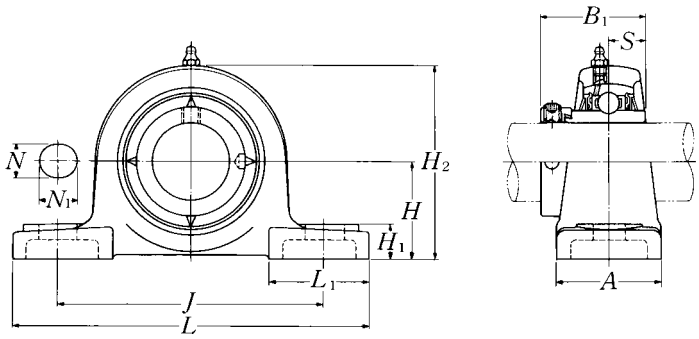


| Shaft dia. mm / inch | Unit number 1)2)3) | Nominal dimensions | | | | | | | | | | | Bolt size mm / inch |
|---|---|---|---|---|---|---|---|---|---|---|---|---|---|
| | | mm | | | | | | inch | | | | | |
| | | $H$ | $L$ | $J$ | $A$ | $N$ | $N_1$ | $H_1$ | $H_2$ | $L_1$ | $B_1$ | $S$ | |
| **20** | **UELPL204D1W3** | 31.75 | 127 | 95 | 38 | 13 | 16 | 14 | 64 | 42 | 43.7 | 17.1 | M10 |
| 3/4 | **UELPL204-012D1W3** | 1 1/4 | 5 | 3 3/4 | 1 1/2 | 1/2 | 5/8 | 9/16 | 2 17/32 | 1 21/32 | 1.720 | 0.673 | 3/8 |
| **25** | **UELPL205D1W3** | 33.34 | 140 | 105 | 38 | 13 | 16 | 15 | 68 | 42 | 44.4 | 17.45 | M10 |
| 13/16 | **UELPL205-013D1W3** | | | | | | | | | | | | |
| 7/8 | **UELPL205-014D1W3** | 1 5/16 | 5 1/2 | 4 1/8 | 1 1/2 | 1/2 | 5/8 | 19/32 | 2 11/16 | 1 21/32 | 1.748 | 0.687 | 3/8 |
| 15/16 | **UELPL205-015D1W3** | | | | | | | | | | | | |
| **1** | **UELPL205-100D1W3** | | | | | | | | | | | | |
| **30** | **UELPL206D1W3** | 39.69 | 165 | 121 | 48 | 17 | 20 | 17 | 80 | 54 | 48.4 | 18.25 | M14 |
| 1 1/16 | **UELPL206-101D1W3** | | | | | | | | | | | | |
| 1 1/8 | **UELPL206-102D1W3** | 1 9/16 | 6 1/2 | 4 3/4 | 1 7/8 | 21/32 | 25/32 | 21/32 | 3 5/32 | 2 1/8 | 1.906 | 0.719 | 1/2 |
| 1 3/16 | **UELPL206-103D1W3** | | | | | | | | | | | | |
| 1 1/4 | **UELPL206-104D1W3** | | | | | | | | | | | | |
| **35** | **UELPL207D1W3** | 46.04 | 167 | 127 | 48 | 17 | 20 | 18 | 91 | 54 | 51.1 | 18.8 | M14 |
| 1 1/4 | **UELPL207-104D1W3** | | | | | | | | | | | | |
| 1 5/16 | **UELPL207-105D1W3** | 1 13/16 | 6 9/16 | 5 | 1 7/8 | 21/32 | 25/32 | 23/32 | 3 19/32 | 2 1/8 | 2.012 | 0.740 | 1/2 |
| 1 3/8 | **UELPL207-106D1W3** | | | | | | | | | | | | |
| 1 7/16 | **UELPL207-107D1W3** | | | | | | | | | | | | |
| **45** | **UELPL209D1W3** | 52.39 | 190 | 146 | 54 | 17 | 20 | 20 | 104 | 60 | 56.3 | 21.4 | M14 |
| 1 5/8 | **UELPL209-110D1W3** | | | | | | | | | | | | |
| 1 11/16 | **UELPL209-111D1W3** | 2 1/16 | 7 15/32 | 5 3/4 | 2 1/8 | 21/32 | 25/32 | 25/32 | 4 3/32 | 2 3/8 | 2.217 | 0.843 | 1/2 |
| 1 3/4 | **UELPL209-112D1W3** | | | | | | | | | | | | |
| **50** | **UELPL210D1W3** | 55.56 | 206 | 159 | 60 | 20 | 23 | 21 | 112 | 65 | 62.7 | 24.6 | M16 |
| 1 13/16 | **UELPL210-113D1W3** | | | | | | | | | | | | |
| 1 7/8 | **UELPL210-114D1W3** | 2 3/16 | 8 1/8 | 6 1/4 | 2 3/8 | 25/32 | 29/32 | 13/16 | 4 13/32 | 2 9/16 | 2.469 | 0.969 | 5/8 |
| 1 15/16 | **UELPL210-115D1W3** | | | | | | | | | | | | |
| **2** | **UELPL210-200D1W3** | | | | | | | | | | | | |

Remarks: 1) These numbers indicate relubricatable type. If maintenance free type is needed, please order without suffix "D1"
2) UELPL204 and UELPL205 has solid bases.
3) UELPL208 has the same dimension as UELP208 shown in page 230

Note: Please refer to page 36 for size of grease fitting.

| Bearing number | Housing [1] number | Mass of unit kg | lb |
|---|---|---|---|
| UEL204D1W3 | PL204D1 | 0.8 | |
| UEL204-012D1W3 | PL204D1 | 1.8 | |
| UEL205D1W3 | PL205D1 | 0.9 | |
| UEL205-013D1W3 | PL205D1 | 2.0 | |
| UEL205-014D1W3 | PL205D1 | | |
| UEL205-015D1W3 | PL205D1 | | |
| UEL205-100D1W3 | PL205D1 | | |
| UEL206D1W3 | PL206D1 | 1.4 | |
| UEL206-101D1W3 | PL206D1 | 3.1 | |
| UEL206-102D1W3 | PL206D1 | | |
| UEL206-103D1W3 | PL206D1 | | |
| UEL206-104D1W3 | PL206D1 | | |
| UEL207D1W3 | PL207D1 | 1.7 | |
| UEL207-104D1W3 | PL207D1 | 3.7 | |
| UEL207-105D1W3 | PL207D1 | | |
| UEL207-106D1W3 | PL207D1 | | |
| UEL207-107D1W3 | PL207D1 | | |
| UEL209D1W3 | PL209D1 | 2.3 | |
| UEL209-110D1W3 | PL209D1 | 5.1 | |
| UEL209-111D1W3 | PL209D1 | | |
| UEL209-112D1W3 | PL209D1 | | |
| UEL210D1W3 | PL210D1 | 3.0 | |
| UEL210-113D1W3 | PL210D1 | 6.6 | |
| UEL210-114D1W3 | PL210D1 | | |
| UEL210-115D1W3 | PL210D1 | | |
| UEL210-200D1W3 | PL210D1 | | |

## Pillow blocks cast housing low center height
## Eccentric locking collar type

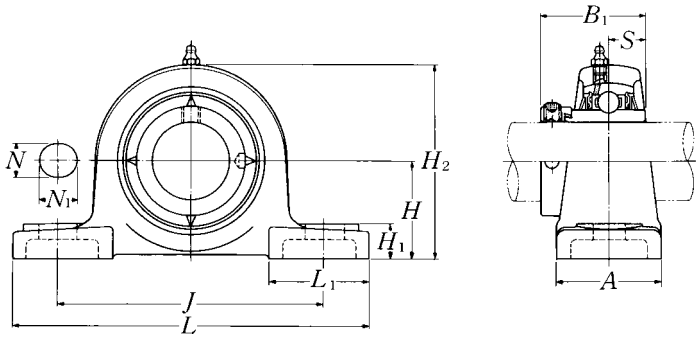


| Shaft dia. mm / inch | Unit number 1)2)3) | Nominal dimensions mm / inch H | L | J | A | N | N1 | H1 | H2 | L1 | B1 | S | Bolt size mm / inch |
|---|---|---|---|---|---|---|---|---|---|---|---|---|---|
| 55 | UELPL211D1W3 | 61.91 | 219 | 171 | 60 | 20 | 23 | 23 | 124 | 65 | 71.4 | 27.75 | M16 |
| 2 | UELPL211-200D1W3 | | | | | | | | | | | | |
| 2 1/16 | UELPL211-201D1W3 | 2 7/16 | 8 5/8 | 6 23/32 | 2 3/8 | 25/32 | 29/32 | 29/32 | 4 7/8 | 2 9/16 | 2.811 | 1.093 | 5/8 |
| 2 1/8 | UELPL211-202D1W3 | | | | | | | | | | | | |
| 2 3/16 | UELPL211-203D1W3 | | | | | | | | | | | | |
| 60 | UELPL212D1W3 | 68.26 | 241 | 184 | 70 | 20 | 23 | 25 | 136 | 70 | 77.8 | 30.95 | M16 |
| 2 1/4 | UELPL212-204D1W3 | | | | | | | | | | | | |
| 2 5/16 | UELPL212-205D1W3 | 2 11/16 | 9 1/2 | 7 1/4 | 2 3/4 | 25/32 | 29/32 | 31/32 | 5 11/32 | 2 3/4 | 3.063 | 1.219 | 5/8 |
| 2 3/8 | UELPL212-206D1W3 | | | | | | | | | | | | |
| 2 7/16 | UELPL212-207D1W3 | | | | | | | | | | | | |

Remarks: 1) These numbers indicate relubricatable type. If maintenance free type is needed, please order without suffix "D1".
Note: Please refer to page 36 for size of grease fitting.

| Bearing number | Housing [1] number | Mass of unit kg | lb |
|---|---|---|---|
| UEL211D1W3 | PL211D1 | 3.7 | |
| UEL211-200D1W3 | PL211D1 | 8.2 | |
| UEL211-201D1W3 | PL211D1 | | |
| UEL211-202D1W3 | PL211D1 | | |
| UEL211-203D1W3 | PL211D1 | | |
| UEL212D1W3 | PL212D1 | 5.0 | |
| UEL212-204D1W3 | PL212D1 | 11 | |
| UEL212-205D1W3 | PL212D1 | | |
| UEL212-206D1W3 | PL212D1 | | |
| UEL212-207D1W3 | PL212D1 | | |

## Pillow blocks cast housing high center height
## Eccentric locking collar type

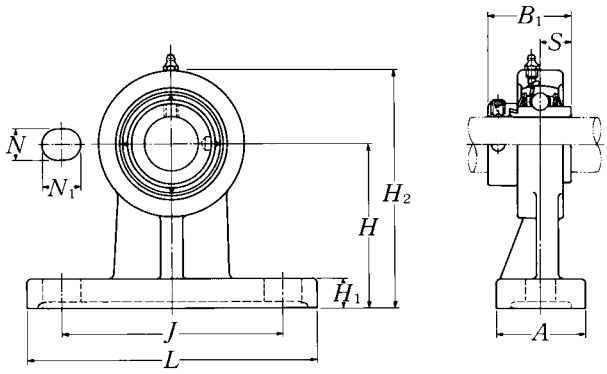


| Shaft dia. mm / inch | Unit number [1] | Nominal dimensions mm / inch H | L | J | A | N | N1 | H1 | H2 | B1 | S | Bolt size mm / inch | Bearing number |
|---|---|---|---|---|---|---|---|---|---|---|---|---|---|
| 20 | UELHP204D1W3 | 70 | 127 | 95 | 40 | 13 | 19 | 13 | 101 | 43.7 | 17.1 | M10 | UEL204D1W3 |
| 3/4 | UELHP204-012D1W3 | 2 3/4 | 5 | 3 3/4 | 1 9/16 | 1/2 | 3/4 | 1/2 | 3 31/32 | 1.720 | 0.673 | 3/8 | UEL204-012D1W3 |
| 25 | UELHP205D1W3 | 80 | 142 | 105 | 50 | 13 | 19 | 13 | 114 | 44.4 | 17.45 | M10 | UEL205D1W3 |
| 13/16 | UELHP205-013D1W3 | | | | | | | | | | | | UEL205-013D1W3 |
| 7/8 | UELHP205-014D1W3 | 3 5/32 | 5 19/32 | 4 1/8 | 1 31/32 | 1/2 | 3/4 | 1/2 | 4 1/2 | 1.748 | 0.687 | 3/8 | UEL205-014D1W3 |
| 15/16 | UELHP205-015D1W3 | | | | | | | | | | | | UEL205-015D1W3 |
| 1 | UELHP205-100D1W3 | | | | | | | | | | | | UEL205-100D1W3 |
| 30 | UELHP206D1W3 | 90 | 165 | 120 | 50 | 17 | 21 | 16 | 130 | 48.4 | 18.25 | M14 | UEL206D1W3 |
| 1 1/16 | UELHP206-101D1W3 | | | | | | | | | | | | UEL206-101D1W3 |
| 1 1/8 | UELHP206-102D1W3 | 3 35/64 | 6 1/2 | 4 23/32 | 1 31/32 | 21/32 | 13/16 | 5/8 | 5 1/8 | 1.906 | 0.719 | 1/2 | UEL206-102D1W3 |
| 1 3/16 | UELHP206-103D1W3 | | | | | | | | | | | | UEL206-103D1W3 |
| 1 1/4 | UELHP206-104D1W3 | | | | | | | | | | | | UEL206-104D1W3 |
| 35 | UELHP207D1W3 | 95 | 166 | 127 | 60 | 17 | 21 | 18 | 140 | 51.1 | 18.8 | M14 | UEL207D1W3 |
| 1 1/4 | UELHP207-104D1W3 | | | | | | | | | | | | UEL207-104D1W3 |
| 1 5/16 | UELHP207-105D1W3 | 3 47/64 | 6 17/32 | 5 | 2 3/8 | 21/32 | 13/16 | 23/32 | 5 1/2 | 2.012 | 0.740 | 1/2 | UEL207-105D1W3 |
| 1 3/8 | UELHP207-106D1W3 | | | | | | | | | | | | UEL207-106D1W3 |
| 1 7/16 | UELHP207-107D1W3 | | | | | | | | | | | | UEL207-107D1W3 |
| 40 | UELHP208D1W3 | 100 | 184 | 136 | 70 | 17 | 21 | 20 | 150 | 56.3 | 21.4 | M14 | UEL208D1W3 |
| 1 1/2 | UELHP208-108D1W3 | 3 15/16 | 7 1/4 | 5 11/32 | 2 3/4 | 21/32 | 13/16 | 25/32 | 5 29/32 | 2.217 | 0.843 | 1/2 | UEL208-108D1W3 |
| 1 9/16 | UELHP208-109D1W3 | | | | | | | | | | | | UEL208-109D1W3 |
| 45 | UELHP209D1W3 | 105 | 190 | 146 | 70 | 17 | 22 | 20 | 158 | 56.3 | 21.4 | M14 | UEL209D1W3 |
| 1 5/8 | UELHP209-110D1W3 | | | | | | | | | | | | UEL209-110D1W3 |
| 1 11/16 | UELHP209-111D1W3 | 4 9/64 | 7 15/32 | 5 3/4 | 2 3/4 | 21/32 | 7/8 | 25/32 | 6 7/32 | 2.217 | 0.843 | 1/2 | UEL209-111D1W3 |
| 1 3/4 | UELHP209-112D1W3 | | | | | | | | | | | | UEL209-112D1W3 |
| 50 | UELHP210D1W3 | 110 | 206 | 159 | 70 | 20 | 22 | 22 | 165 | 62.7 | 24.6 | M16 | UEL210D1W3 |
| 1 13/16 | UELHP210-113D1W3 | | | | | | | | | | | | UEL210-113D1W3 |
| 1 7/8 | UELHP210-114D1W3 | 4 21/64 | 8 1/8 | 6 1/4 | 2 3/4 | 25/32 | 7/8 | 7/8 | 6 1/2 | 2.469 | 0.969 | 5/8 | UEL210-114D1W3 |
| 1 15/16 | UELHP210-115D1W3 | | | | | | | | | | | | UEL210-115D1W3 |
| 2 | UELHP210-200D1W3 | | | | | | | | | | | | UEL210-200D1W3 |

Remarks: 1) These numbers indicate relubricatable type. If maintenance free type is needed, please order without suffix "D1".
Note: Please refer to page 36 for size of grease fitting.

| Housing [1)] number | Mass of unit kg | lb |
|---|---|---|
| HP204D1 | 0.9 | |
| HP204D1 | 2.0 | |
| HP205D1 | 1.3 | |
| HP205D1 | | |
| HP205D1 | 2.9 | |
| HP205D1 | | |
| HP205D1 | | |
| HP206D1 | 1.9 | |
| HP206D1 | | |
| HP206D1 | 4.2 | |
| HP206D1 | | |
| HP206D1 | | |
| HP207D1 | 2.4 | |
| HP207D1 | | |
| HP207D1 | 5.3 | |
| HP207D1 | | |
| HP207D1 | | |
| HP208D1 | 3.3 | |
| HP208D1 | 7.3 | |
| HP208D1 | | |
| HP209D1 | 3.7 | |
| HP209D1 | | |
| HP209D1 | 8.2 | |
| HP209D1 | | |
| HP210D1 | 4.1 | |
| HP210D1 | | |
| HP210D1 | 9.0 | |
| HP210D1 | | |
| HP210D1 | | |

## Narrow pillow blocks cast housing
## Eccentric locking collar type

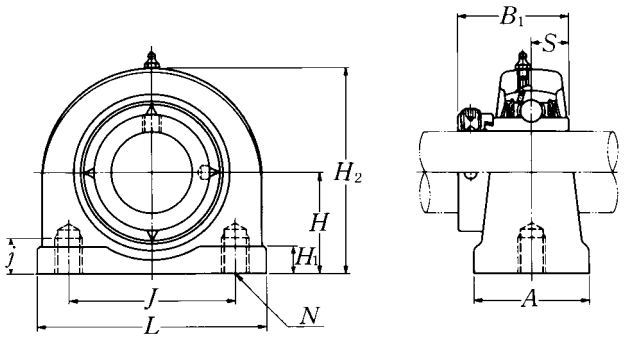


| Shaft dia. mm / inch | Unit number 1) | Nominal dimensions mm / inch H | L | J | A | j | H1 | H2 | B1 | S | N | Bearing number |
|---|---|---|---|---|---|---|---|---|---|---|---|---|
| 20 | UELUP204D1W3 | 30.2 | 76 | 52 | 38 | 13 | 11 | 62 | 43.7 | 17.1 | M10 × 1.5 | UEL204D1W3 |
| 3/4 | UELUP204-012D1W3 | 1 3/16 | 3 | 2 1/16 | 1 1/2 | 1/2 | 7/16 | 2 7/16 | 1.720 | 0.673 | M10 × 1.5 | UEL204-012D1W3 |
| 25 | UELUP205D1W3 | 36.5 | 84 | 56 | 38 | 15 | 12 | 72 | 44.4 | 17.45 | M10 × 1.5 | UEL205D1W3 |
| 13/16 | UELUP205-013D1W3 | | | | | | | | | | | UEL205-013D1W3 |
| 7/8 | UELUP205-014D1W3 | 1 7/16 | 3 5/16 | 2 7/32 | 1 1/2 | 19/32 | 15/32 | 2 27/32 | 1.748 | 0.687 | M10 × 1.5 | UEL205-014D1W3 |
| 15/16 | UELUP205-015D1W3 | | | | | | | | | | | UEL205-015D1W3 |
| 1 | UELUP205-100D1W3 | | | | | | | | | | | UEL205-100D1W3 |
| 30 | UELUP206D1W3 | 42.9 | 94 | 66 | 48 | 18 | 12 | 84 | 48.4 | 18.25 | M14 × 2 | UEL206D1W3 |
| 1 1/16 | UELUP206-101D1W3 | | | | | | | | | | | UEL206-101D1W3 |
| 1 1/8 | UELUP206-102D1W3 | 1 11/16 | 3 11/16 | 2 19/32 | 1 7/8 | 23/32 | 15/32 | 3 5/16 | 1.906 | 0.719 | M14 × 2 | UEL206-102D1W3 |
| 1 3/16 | UELUP206-103D1W3 | | | | | | | | | | | UEL206-103D1W3 |
| 1 1/4 | UELUP206-104D1W3 | | | | | | | | | | | UEL206-104D1W3 |
| 35 | UELUP207D1W3 | 47.6 | 110 | 80 | 48 | 20 | 13 | 95 | 51.1 | 18.8 | M14 × 2 | UEL207D1W3 |
| 1 1/4 | UELUP207-104D1W3 | | | | | | | | | | | UEL207-104D1W3 |
| 1 5/16 | UELUP207-105D1W3 | 1 7/8 | 4 11/32 | 3 5/32 | 1 7/8 | 25/32 | 1/2 | 3 3/4 | 2.012 | 0.740 | M14 × 2 | UEL207-105D1W3 |
| 1 3/8 | UELUP207-106D1W3 | | | | | | | | | | | UEL207-106D1W3 |
| 1 7/16 | UELUP207-107D1W3 | | | | | | | | | | | UEL207-107D1W3 |
| 40 | UELUP208D1W3 | 49.2 | 116 | 84 | 54 | 20 | 13 | 100 | 56.3 | 21.4 | M14 × 2 | UEL208D1W3 |
| 1 1/2 | UELUP208-108D1W3 | 1 15/16 | 4 9/16 | 3 5/16 | 2 1/8 | 25/32 | 1/2 | 3 15/16 | 2.217 | 0.843 | M14 × 2 | UEL208-108D1W3 |
| 1 9/16 | UELUP208-109D1W3 | | | | | | | | | | | UEL208-109D1W3 |
| 45 | UELUP209D1W3 | 54.2 | 120 | 90 | 54 | 25 | 13 | 108 | 56.3 | 21.4 | M14 × 2 | UEL209D1W3 |
| 1 5/8 | UELUP209-110D1W3 | | | | | | | | | | | UEL209-110D1W3 |
| 1 11/16 | UELUP209-111D1W3 | 2 1/8 | 4 23/32 | 3 17/32 | 2 1/8 | 31/32 | 1/2 | 4 1/4 | 2.217 | 0.843 | M14 × 2 | UEL209-111D1W3 |
| 1 3/4 | UELUP209-112D1W3 | | | | | | | | | | | UEL209-112D1W3 |
| 50 | UELUP210D1W3 | 57.2 | 130 | 94 | 60 | 25 | 14 | 116 | 62.7 | 24.6 | M16 × 2 | UEL210D1W3 |
| 1 13/16 | UELUP210-113D1W3 | | | | | | | | | | | UEL210-113D1W3 |
| 1 7/8 | UELUP210-114D1W3 | 2 1/4 | 5 1/8 | 3 11/16 | 2 3/8 | 31/32 | 9/16 | 4 9/16 | 2.469 | 0.969 | M16 × 2 | UEL210-114D1W3 |
| 1 15/16 | UELUP210-115D1W3 | | | | | | | | | | | UEL210-115D1W3 |
| 2 | UELUP210-200D1W3 | | | | | | | | | | | UEL210-200D1W3 |

Remarks: 1) These numbers indicate relubricatable type. If maintenance free type is needed, please order without suffix "D1".
Note: Please refer to page 36 for size of grease fitting.

| Housing [1)] number | Mass of unit kg | lb |
|---|---|---|
| UP204D1 | 0.6 | |
| UP204D1 | 1.3 | |
| UP205D1 | 0.8 | |
| UP205D1 | | |
| UP205D1 | 1.8 | |
| UP205D1 | | |
| UP205D1 | | |
| UP206D1 | 1.3 | |
| UP206D1 | | |
| UP206D1 | 2.9 | |
| UP206D1 | | |
| UP206D1 | | |
| UP207D1 | 1.7 | |
| UP207D1 | | |
| UP207D1 | 3.8 | |
| UP207D1 | | |
| UP207D1 | | |
| UP208D1 | 2.0 | |
| UP208D1 | 4.4 | |
| UP208D1 | | |
| UP209D1 | 2.3 | |
| UP209D1 | | |
| UP209D1 | 5.1 | |
| UP209D1 | | |
| UP210D1 | 2.8 | |
| UP210D1 | | |
| UP210D1 | 6.2 | |
| UP210D1 | | |
| UP210D1 | | |

## Pillow blocks cast housing low center height
## Eccentric locking collar type

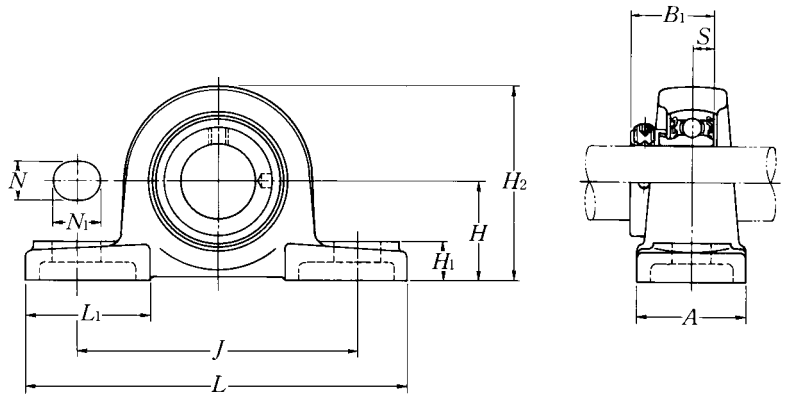


| Shaft dia. mm / inch | Unit number 1) 2) 3) | Nominal dimensions (mm / inch) H | L | J | A | N | N1 | H1 | H2 | L1 | B1 | S | Bolt size mm / inch |
|---|---|---|---|---|---|---|---|---|---|---|---|---|---|
| 12 | AELPL201W3 | 26.99 | 121 | 89 | 35 | 11 | 14 | 13 | 54 | 40 | 28.6 | 6.5 | M10 |
| 1/2 | AELPL201-008W3 | 1 1/16 | 4 3/4 | 3 1/2 | 1 3/8 | 7/16 | 9/16 | 1/2 | 2 1/8 | 1 9/16 | 1.126 | 0.256 | 3/8 |
| 15 | AELPL202W3 | 26.99 | 121 | 89 | 35 | 11 | 14 | 13 | 54 | 40 | 28.6 | 6.5 | M10 |
| 9/16 | AELPL202-009W3 | 1 1/16 | 4 3/4 | 3 1/2 | 1 3/8 | 7/16 | 9/16 | 1/2 | 2 1/8 | 1 9/16 | 1.126 | 0.256 | 3/8 |
| 5/8 | AELPL202-010W3 | | | | | | | | | | | | |
| 17 | AELPL203W3 | 26.99 | 121 | 89 | 35 | 11 | 14 | 13 | 54 | 40 | 28.6 | 6.5 | M10 |
| 11/16 | AELPL203-011W3 | 1 1/16 | 4 3/4 | 3 1/2 | 1 3/8 | 7/16 | 9/16 | 1/2 | 2 1/8 | 1 9/16 | 1.126 | 0.256 | 3/8 |
| 20 | AELPL204W3 | 31.75 | 127 | 95 | 38 | 13 | 16 | 14 | 64 | 42 | 31 | 7.5 | M10 |
| 3/4 | AELPL204-012W3 | 1 1/4 | 5 | 3 3/4 | 1 1/2 | 1/2 | 5/8 | 9/16 | 2 17/32 | 1 21/32 | 1.220 | 0.295 | 3/8 |
| 25 | AELPL205W3 | 33.34 | 140 | 105 | 38 | 13 | 16 | 15 | 68 | 42 | 31 | 7.5 | M10 |
| 13/16 | AELPL205-013W3 | | | | | | | | | | | | |
| 7/8 | AELPL205-014W3 | 1 5/16 | 5 1/2 | 4 1/8 | 1 1/2 | 1/2 | 5/8 | 19/32 | 2 11/16 | 1 21/32 | 1.220 | 0.295 | 3/8 |
| 15/16 | AELPL205-015W3 | | | | | | | | | | | | |
| 1 | AELPL205-100W3 | | | | | | | | | | | | |
| 30 | AELPL206W3 | 39.69 | 165 | 121 | 48 | 17 | 20 | 17 | 80 | 54 | 35.7 | 9 | M14 |
| 1 1/16 | AELPL206-101W3 | | | | | | | | | | | | |
| 1 1/8 | AELPL206-102W3 | 1 9/16 | 6 1/2 | 4 3/4 | 1 7/8 | 21/32 | 25/32 | 21/32 | 3 5/32 | 2 1/8 | 1.406 | 0.354 | 1/2 |
| 1 3/16 | AELPL206-103W3 | | | | | | | | | | | | |
| 1 1/4 | AELPL206-104W3 | | | | | | | | | | | | |
| 35 | AELPL207W3 | 46.04 | 167 | 127 | 48 | 17 | 20 | 18 | 91 | 54 | 38.9 | 9.5 | M14 |
| 1 1/4 | AELPL207-104W3 | | | | | | | | | | | | |
| 1 5/16 | AELPL207-105W3 | 1 13/16 | 6 9/16 | 5 | 1 7/8 | 21/32 | 25/32 | 23/32 | 3 19/32 | 2 1/8 | 1.531 | 0.374 | 1/2 |
| 1 3/8 | AELPL207-106W3 | | | | | | | | | | | | |
| 1 7/16 | AELPL207-107W3 | | | | | | | | | | | | |
| 40 | AELP208W3 | 49.2 | 184 | 137 | 54 | 17 | 20 | 18 | 98 | 52 | 43.7 | 11 | M14 |
| 1 1/2 | AELP208-108W3 | 1 15/16 | 7 1/4 | 5 13/32 | 2 1/8 | 21/32 | 25/32 | 23/32 | 3 27/32 | 2 1/16 | 1.720 | 0.433 | 1/2 |
| 1 9/16 | AELP208-109W3 | | | | | | | | | | | | |

Remarks: 1) AELPL201 to AELPL205 has solid base.
2) If relubricatable type is neede, please order with suffix "D1".
3) AELPL208 has the same dimension as AELP208.

| Bearing number [2] | Housing [2] number | Mass of unit kg lb |
|---|---|---|
| AEL201W3 | PL201 | 0.5 |
| AEL201-008W3 | PL201 | 1.1 |
| AEL202W3 | PL201 | 0.5 |
| AEL202-009W3 | PL201 | 1.1 |
| AEL202-010W3 | PL201 | |
| AEL203W3 | PL201 | 0.5 |
| AEL203-011W3 | PL201 | 1.1 |
| AEL204W3 | PL204 | 0.7 |
| AEL204-012W3 | PL204 | 1.5 |
| AEL205W3 | PL205 | 0.8 |
| AEL205-013W3 | PL205 | 1.8 |
| AEL205-014W3 | PL205 | |
| AEL205-015W3 | PL205 | |
| AEL205-100W3 | PL205 | |
| AEL206W3 | PL206 | 1.3 |
| AEL206-101W3 | PL206 | 2.9 |
| AEL206-102W3 | PL206 | |
| AEL206-103W3 | PL206 | |
| AEL206-104W3 | PL206 | |
| AEL207W3 | PL207 | 1.6 |
| AEL207-104W3 | PL207 | 3.5 |
| AEL207-105W3 | PL207 | |
| AEL207-106W3 | PL207 | |
| AEL207-107W3 | PL207 | |
| AEL208W3 | P208 | 2.0 |
| AEL208-108W3 | P208 | 4.4 |
| AEL208-109W3 | P208 | |

## Pillow blocks cast housing low center height
## Eccentric locking collar type

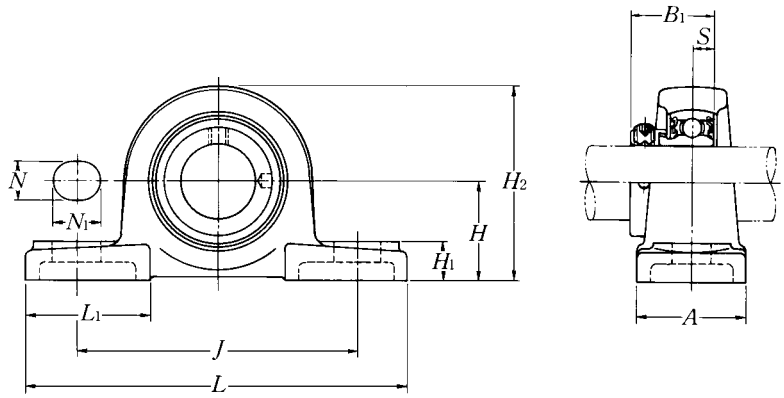


| Shaft dia. mm / inch | Unit number 1) 2) 3) | Nominal dimensions H | L | J | A | N (mm / inch) | N1 | H1 | H2 | L1 | B1 | S | Bolt size mm / inch |
|---|---|---|---|---|---|---|---|---|---|---|---|---|---|
| 45 | AELPL209W3 | 52.39 | 190 | 146 | 54 | 17 | 20 | 20 | 104 | 60 | 43.7 | 11 | M14 |
| 1 5/8 | AELPL209-110W3 | | | | | | | | | | | | |
| 1 11/16 | AELPL209-111W3 | 2 1/16 | 7 15/32 | 5 3/4 | 2 1/8 | 21/32 | 25/32 | 25/32 | 4 3/32 | 2 3/8 | 1.720 | 0.433 | 1/2 |
| 1 3/4 | AELPL209-112W3 | | | | | | | | | | | | |
| 50 | AELPL210W3 | 55.56 | 206 | 159 | 60 | 20 | 23 | 21 | 112 | 65 | 43.7 | 11 | M16 |
| 1 13/16 | AELPL210-113W3 | | | | | | | | | | | | |
| 1 7/8 | AELPL210-114W3 | 2 3/16 | 8 1/8 | 6 1/4 | 2 3/8 | 25/32 | 29/32 | 13/16 | 4 13/32 | 2 9/16 | 1.720 | 0.433 | 5/8 |
| 1 15/16 | AELPL210-115W3 | | | | | | | | | | | | |
| 2 | AELPL210-200W3 | | | | | | | | | | | | |
| 55 | AELPL211W3 | 61.91 | 219 | 171 | 60 | 20 | 23 | 23 | 124 | 65 | 48.4 | 12 | M16 |
| 2 | AELPL211-200W3 | | | | | | | | | | | | |
| 2 1/16 | AELPL211-201W3 | 2 7/16 | 8 5/8 | 6 23/32 | 2 3/8 | 25/32 | 29/32 | 29/32 | 4 7/8 | 2 9/16 | 1.906 | 0.472 | 5/8 |
| 2 1/8 | AELPL211-202W3 | | | | | | | | | | | | |
| 2 3/16 | AELPL211-203W3 | | | | | | | | | | | | |
| 60 | AELPL212W3 | 68.26 | 241 | 184 | 70 | 20 | 23 | 25 | 136 | 70 | 53.1 | 13.5 | M16 |
| 2 1/4 | AELPL212-204W3 | | | | | | | | | | | | |
| 2 5/16 | AELPL212-205W3 | 2 11/16 | 9 1/2 | 7 1/4 | 2 3/4 | 25/32 | 29/32 | 31/32 | 5 11/32 | 2 3/4 | 2.091 | 0.531 | 5/8 |
| 2 3/8 | AELPL212-206W3 | | | | | | | | | | | | |
| 2 7/16 | AELPL212-207W3 | | | | | | | | | | | | |

Remarks: 1) AELPL201 to AELPL205 has solid base.
2) If relubricatable type is neede, please order with suffix "D1".
3) AELPL208 has the same dimension as AELP208

| Bearing number [2] | Housing [2] number | Mass of unit kg lb |
|---|---|---|
| AEL209W3 | PL209 | 2.2 |
| AEL209-110W3 | PL209 | |
| AEL209-111W3 | PL209 | 4.9 |
| AEL209-112W3 | PL209 | |
| AEL210W3 | PL210 | 2.7 |
| AEL210-113W3 | PL210 | |
| AEL210-114W3 | PL210 | 6.0 |
| AEL210-115W3 | PL210 | |
| AEL210-200W3 | PL210 | |
| AEL211W3 | PL211 | 3.3 |
| AEL211-200W3 | PL211 | |
| AEL211-201W3 | PL211 | 7.3 |
| AEL211-202W3 | PL211 | |
| AEL211-203W3 | PL211 | |
| AEL212W3 | PL212 | 4.5 |
| AEL212-204W3 | PL212 | |
| AEL212-205W3 | PL212 | 9.9 |
| AEL212-206W3 | PL212 | |
| AEL212-207W3 | PL212 | |

## Pillow blocks cast housing low center height
## Eccentric locking collar type

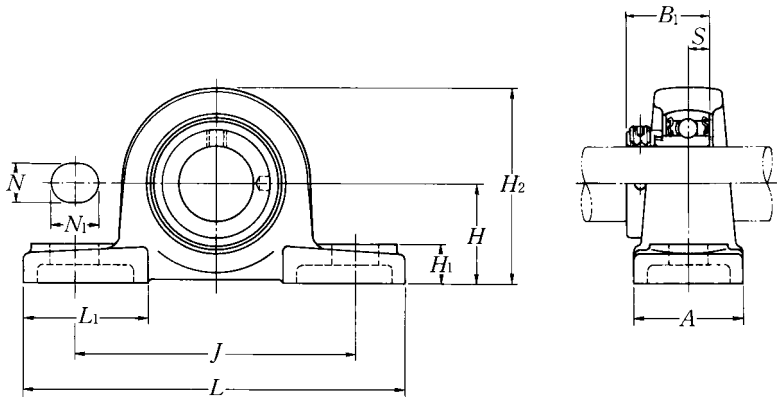


| Shaft dia. mm / inch | Unit number 1) 2) 3) | Nominal dimensions mm / inch H | L | J | A | N | N1 | H1 | H2 | L1 | B1 | S | Bolt size mm / inch |
|---|---|---|---|---|---|---|---|---|---|---|---|---|---|
| 12 | JELPL201W3 | 26.99 | 121 | 89 | 35 | 11 | 14 | 13 | 54 | 40 | 28.6 | 6.5 | M10 |
| 1/2 | JELPL201-008W3 | 1 1/16 | 4 3/4 | 3 1/2 | 1 3/8 | 7/16 | 9/16 | 1/2 | 2 1/8 | 1 9/16 | 1.126 | 0.256 | 3/8 |
| 15 | JELPL202W3 | 26.99 | 121 | 89 | 35 | 11 | 14 | 13 | 54 | 40 | 28.6 | 6.5 | M10 |
| 9/16 | JELPL202-009W3 | 1 1/16 | 4 3/4 | 3 1/2 | 1 3/8 | 7/16 | 9/16 | 1/2 | 2 1/8 | 1 9/16 | 1.126 | 0.256 | 3/8 |
| 5/8 | JELPL202-010W3 | | | | | | | | | | | | |
| 17 | JELPL203W3 | 26.99 | 121 | 89 | 35 | 11 | 14 | 13 | 54 | 40 | 28.6 | 6.5 | M10 |
| 11/16 | JELPL203-011W3 | 1 1/16 | 4 3/4 | 3 1/2 | 1 3/8 | 7/16 | 9/16 | 1/2 | 2 1/8 | 1 9/16 | 1.126 | 0.256 | 3/8 |
| 20 | JELPL204W3 | 31.75 | 127 | 95 | 38 | 13 | 16 | 14 | 64 | 42 | 31 | 7.5 | M10 |
| 3/4 | JELPL204-012W3 | 1 1/4 | 5 | 3 3/4 | 1 1/2 | 1/2 | 5/8 | 9/16 | 2 17/32 | 1 21/32 | 1.220 | 0.295 | 3/8 |
| 25 | JELPL205W3 | 33.34 | 140 | 105 | 38 | 13 | 16 | 15 | 68 | 42 | 31 | 7.5 | M10 |
| 13/16 | JELPL205-013W3 | | | | | | | | | | | | |
| 7/8 | JELPL205-014W3 | 1 5/16 | 5 1/2 | 4 1/8 | 1 1/2 | 1/2 | 5/8 | 19/32 | 2 11/16 | 1 21/32 | 1.220 | 0.295 | 3/8 |
| 15/16 | JELPL205-015W3 | | | | | | | | | | | | |
| 1 | JELPL205-100W3 | | | | | | | | | | | | |
| 30 | JELPL206W3 | 39.69 | 165 | 121 | 48 | 17 | 20 | 17 | 80 | 54 | 35.7 | 9 | M14 |
| 1 1/16 | JELPL206-101W3 | | | | | | | | | | | | |
| 1 1/8 | JELPL206-102W3 | 1 9/16 | 6 1/2 | 4 3/4 | 1 7/8 | 21/32 | 25/32 | 21/32 | 3 5/32 | 2 1/8 | 1.406 | 0.354 | 1/2 |
| 1 3/16 | JELPL206-103W3 | | | | | | | | | | | | |
| 1 1/4 | JELPL206-104W3 | | | | | | | | | | | | |
| 35 | JELPL207W3 | 46.04 | 167 | 127 | 48 | 17 | 20 | 18 | 91 | 54 | 38.9 | 9.5 | M14 |
| 1 1/4 | JELPL207-104W3 | | | | | | | | | | | | |
| 1 5/16 | JELPL207-105W3 | 1 13/16 | 6 9/16 | 5 | 1 7/8 | 21/32 | 25/32 | 23/32 | 3 19/32 | 2 1/8 | 1.531 | 0.374 | 1/2 |
| 1 3/8 | JELPL207-106W3 | | | | | | | | | | | | |
| 1 7/16 | JELPL207-107W3 | | | | | | | | | | | | |
| 40 | JELP208W3 | 49.2 | 184 | 137 | 54 | 17 | 20 | 18 | 98 | 52 | 43.7 | 11 | M14 |
| 1 1/2 | JELP208-108W3 | 1 15/16 | 7 1/4 | 5 13/32 | 2 1/8 | 21/32 | 25/32 | 23/32 | 3 27/32 | 2 1/16 | 1.720 | 0.433 | 1/2 |
| 1 9/16 | JELP208-109W3 | | | | | | | | | | | | |

Remarks: 1) JELPL201 to JELPL205 has solid base.
2) If relubricatable type is neede, please order with suffix "D1".
3) JELPL208 has the same dimension as JELP208.

| Bearing number [2] | Housing [2] number | Mass of unit kg | lb |
|---|---|---|---|
| JEL201W3 | PL201 | 0.5 | |
| JEL201-008W3 | PL201 | 1.1 | |
| JEL202W3 | PL201 | 0.5 | |
| JEL202-009W3 | PL201 | 1.1 | |
| JEL202-010W3 | PL201 | | |
| JEL203W3 | PL201 | 0.5 | |
| JEL203-011W3 | PL201 | 1.1 | |
| JEL204W3 | PL204 | 0.7 | |
| JEL204-012W3 | PL204 | 1.5 | |
| JEL205W3 | PL205 | 0.8 | |
| JEL205-013W3 | PL205 | 1.8 | |
| JEL205-014W3 | PL205 | | |
| JEL205-015W3 | PL205 | | |
| JEL205-100W3 | PL205 | | |
| JEL206W3 | PL206 | 1.3 | |
| JEL206-101W3 | PL206 | 2.9 | |
| JEL206-102W3 | PL206 | | |
| JEL206-103W3 | PL206 | | |
| JEL206-104W3 | PL206 | | |
| JEL207W3 | PL207 | 1.6 | |
| JEL207-104W3 | PL207 | 3.5 | |
| JEL207-105W3 | PL207 | | |
| JEL207-106W3 | PL207 | | |
| JEL207-107W3 | PL207 | | |
| JEL208W3 | P208 | 2.0 | |
| JEL208-108W3 | P208 | 4.4 | |
| JEL208-109W3 | P208 | | |

## Pillow blocks cast housing low center height
## Eccentric locking collar type

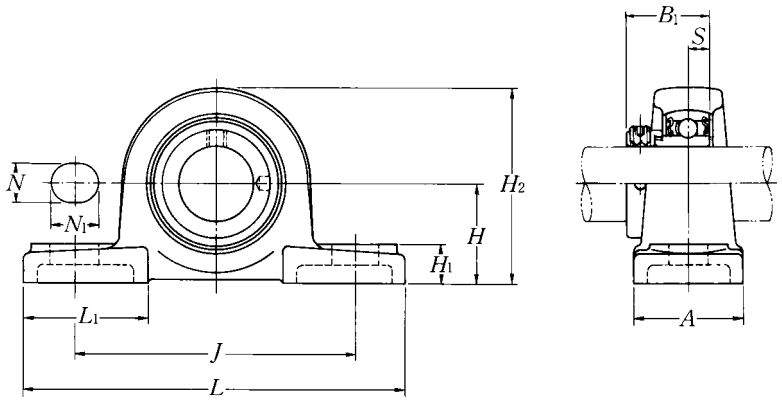


| Shaft dia. mm / inch | Unit number 1) 2) 3) | Nominal dimensions (mm / inch) H | L | J | A | N | N1 | H1 | H2 | L1 | B1 | S | Bolt size mm / inch |
|---|---|---|---|---|---|---|---|---|---|---|---|---|---|
| 45 | JELPL209W3 | 52.39 | 190 | 146 | 54 | 17 | 20 | 20 | 104 | 60 | 43.7 | 11 | M14 |
| 1 5/8 | JELPL209-110W3 | | | | | | | | | | | | |
| 1 11/16 | JELPL209-111W3 | 2 1/16 | 7 15/32 | 5 3/4 | 2 1/8 | 21/32 | 25/32 | 25/32 | 4 3/32 | 2 3/8 | 1.720 | 0.433 | 1/2 |
| 1 3/4 | JELPL209-112W3 | | | | | | | | | | | | |
| 50 | JELPL210W3 | 55.56 | 206 | 159 | 60 | 20 | 23 | 21 | 112 | 65 | 43.7 | 11 | M16 |
| 1 13/16 | JELPL210-113W3 | | | | | | | | | | | | |
| 1 7/8 | JELPL210-114W3 | 2 3/16 | 8 1/8 | 6 1/4 | 2 3/8 | 25/32 | 29/32 | 13/16 | 4 13/32 | 2 9/16 | 1.720 | 0.433 | 5/8 |
| 1 15/16 | JELPL210-115W3 | | | | | | | | | | | | |
| 2 | JELPL210-200W3 | | | | | | | | | | | | |
| 55 | JELPL211W3 | 61.91 | 219 | 171 | 60 | 20 | 23 | 23 | 124 | 65 | 48.4 | 12 | M16 |
| 2 | JELPL211-200W3 | | | | | | | | | | | | |
| 2 1/16 | JELPL211-201W3 | 2 7/16 | 8 5/8 | 6 23/32 | 2 3/8 | 25/32 | 29/32 | 29/32 | 4 7/8 | 2 9/16 | 1.906 | 0.472 | 5/8 |
| 2 1/8 | JELPL211-202W3 | | | | | | | | | | | | |
| 2 3/16 | JELPL211-203W3 | | | | | | | | | | | | |
| 60 | JELPL212W3 | 68.26 | 241 | 184 | 70 | 20 | 23 | 25 | 136 | 70 | 53.1 | 13.5 | M16 |
| 2 1/4 | JELPL212-204W3 | | | | | | | | | | | | |
| 2 5/16 | JELPL212-205W3 | 2 11/16 | 9 1/2 | 7 1/4 | 2 3/4 | 25/32 | 29/32 | 31/32 | 5 11/32 | 2 3/4 | 2.091 | 0.531 | 5/8 |
| 2 3/8 | JELPL212-206W3 | | | | | | | | | | | | |
| 2 7/16 | JELPL212-207W3 | | | | | | | | | | | | |

Remarks: 1) JELPL201 to JELPL205 has solid base.
2) If relubricatable type is neede, please order with suffix "D1".
3) JELPL208 has the same dimension as JELP208.

| Bearing number [2] | Housing [2] number | Mass of unit kg lb |
|---|---|---|
| JEL209W3 | PL209 | 2.2 |
| JEL209-110W3 | PL209 | |
| JEL209-111W3 | PL209 | 4.9 |
| JEL209-112W3 | PL209 | |
| JEL210W3 | PL210 | 2.8 |
| JEL210-113W3 | PL210 | |
| JEL210-114W3 | PL210 | 6.2 |
| JEL210-115W3 | PL210 | |
| JEL210-200W3 | PL210 | |
| JEL211W3 | PL211 | 3.5 |
| JEL211-200W3 | PL211 | |
| JEL211-201W3 | PL211 | 7.7 |
| JEL211-202W3 | PL211 | |
| JEL211-203W3 | PL211 | |
| JEL212W3 | PL212 | 4.7 |
| JEL212-204W3 | PL212 | |
| JEL212-205W3 | PL212 | 10 |
| JEL212-206W3 | PL212 | |
| JEL212-207W3 | PL212 | |

## Light pillow blocks cast housing
## Eccentric locking collar type

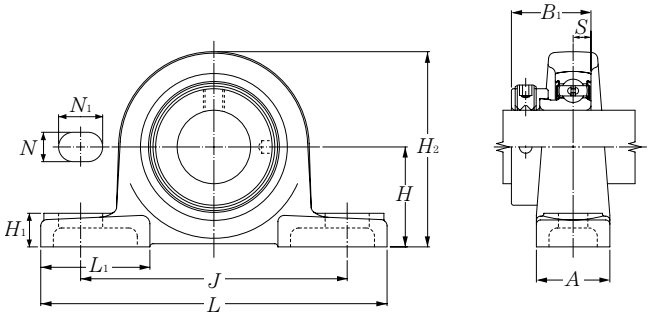


| Shaft dia. mm / inch | Unit number [1] | Nominal dimensions (mm / inch) $H$ | $L$ | $J$ | $A$ | $N$ | $N_1$ | $H_1$ | $H_2$ | $L_1$ | $B_1$ | $S$ | Bolt size mm / inch |
|---|---|---|---|---|---|---|---|---|---|---|---|---|---|
| 12 | AELPB201W3 | 30.2 | 114 | 87 | 25 | 11 | 16 | 12 | 57 | 38 | 28.6 | 6.5 | M8 |
| 1/2 | AELPB201-008W3 | 1 3/16 | 4 1/2 | 3 7/16 | 31/32 | 7/16 | 5/8 | 15/32 | 2 1/4 | 1 1/2 | 1.126 | 0.256 | 5/16 |
| 15 | AELPB202W3 | 30.2 | 114 | 87 | 25 | 11 | 16 | 12 | 57 | 38 | 28.6 | 6.5 | M8 |
| 9/16 | AELPB202-009W3 | 1 3/16 | 4 1/2 | 3 7/16 | 31/32 | 7/16 | 5/8 | 15/32 | 2 1/4 | 1 1/2 | 1.126 | 0.256 | 5/16 |
| 5/8 | AELPB202-010W3 | | | | | | | | | | | | |
| 17 | AELPB203W3 | 30.2 | 114 | 87 | 25 | 11 | 16 | 12 | 57 | 38 | 28.6 | 6.5 | M8 |
| 11/16 | AELPB203-011W3 | 1 3/16 | 4 1/2 | 3 7/16 | 31/32 | 7/16 | 5/8 | 15/32 | 2 1/4 | 1 1/2 | 1.126 | 0.256 | 5/16 |
| 20 | AELPB204W3 | 33.3 | 125 | 97 | 27 | 11 | 16 | 13 | 65 | 40 | 31 | 7.5 | M8 |
| 3/4 | AELPB204-012W3 | 1 5/16 | 4 29/32 | 3 13/16 | 1 1/16 | 7/16 | 5/8 | 1/2 | 2 9/16 | 1 9/16 | 1.220 | 0.295 | 5/16 |
| 25 | AELPB205W3 | 36.5 | 130 | 100 | 29 | 11 | 16 | 13 | 71 | 42 | 31 | 7.5 | M8 |
| 13/16 | AELPB205-013W3 | | | | | | | | | | | | |
| 7/8 | AELPB205-014W3 | 1 7/16 | 5 1/8 | 3 15/16 | 1 5/32 | 7/16 | 5/8 | 1/2 | 2 25/32 | 1 21/32 | 1.220 | 0.295 | 5/16 |
| 15/16 | AELPB205-015W3 | | | | | | | | | | | | |
| 1 | AELPB205-100W3 | | | | | | | | | | | | |
| 30 | AELPB206W3 | 42.9 | 156 | 120 | 33 | 14 | 21 | 14 | 83 | 52 | 35.7 | 9 | M12 |
| 1 1/16 | AELPB206-101W3 | | | | | | | | | | | | |
| 1 1/8 | AELPB206-102W3 | 1 11/16 | 6 5/32 | 4 23/32 | 1 5/16 | 9/16 | 13/16 | 9/16 | 3 9/32 | 2 1/16 | 1.406 | 0.354 | 1/2 |
| 1 3/16 | AELPB206-103W3 | | | | | | | | | | | | |
| 1 1/4 | AELPB206-104W3 | | | | | | | | | | | | |
| 35 | AELPB207W3 | 47.6 | 165 | 127 | 35 | 14 | 21 | 16 | 93 | 52 | 38.9 | 9.5 | M12 |
| 1 1/4 | AELPB207-104W3 | | | | | | | | | | | | |
| 1 5/16 | AELPB207-105W3 | 1 7/8 | 6 1/2 | 5 | 1 3/8 | 9/16 | 13/16 | 5/8 | 3 21/32 | 2 1/16 | 1.531 | 0.374 | 1/2 |
| 1 3/8 | AELPB207-106W3 | | | | | | | | | | | | |
| 1 7/16 | AELPB207-107W3 | | | | | | | | | | | | |
| 40 | AELPB208W3 | 50.8 | 184 | 140 | 37 | 14 | 22 | 18 | 102 | 52 | 43.7 | 11 | M12 |
| 1 1/2 | AELPB208-108W3 | 2 | 7 1/4 | 5 1/2 | 1 15/32 | 9/16 | 7/8 | 23/32 | 4 1/32 | 2 1/16 | 1.720 | 0.433 | 1/2 |
| 1 9/16 | AELPB208-109W3 | | | | | | | | | | | | |

Remarks: 1) If relubricatable type is neede, please order with suffix "D1".

| Bearing number [1] | Housing [1] number | Mass of unit kg | lb |
|---|---|---|---|
| AEL201W3 | PB201 | 0.4 | |
| AEL201-008W3 | PB201 | 0.9 | |
| AEL202W3 | PB201 | 0.4 | |
| AEL202-009W3<br>AEL202-010W3 | PB201 | 0.9 | |
| AEL203W3 | PB201 | 0.4 | |
| AEL203-011W3 | PB201 | 0.9 | |
| AEL204W3 | PB204 | 0.6 | |
| AEL204-012W3 | PB204 | 1.3 | |
| AEL205W3 | PB205 | 0.7 | |
| AEL205-013W3<br>AEL205-014W3<br>AEL205-015W3<br>AEL205-100W3 | PB205 | 1.5 | |
| AEL206W3 | PB206 | 1.1 | |
| AEL206-101W3<br>AEL206-102W3<br>AEL206-103W3<br>AEL206-104W3 | PB206 | 2.4 | |
| AEL207W3 | PB207 | 1.4 | |
| AEL207-104W3<br>AEL207-105W3<br>AEL207-106W3<br>AEL207-107W3 | PB207 | 3.1 | |
| AEL208W3 | PB208 | 2.0 | |
| AEL208-108W3<br>AEL208-109W3 | PB208 | 4.4 | |

## Pillow blocks pressed steel housing
## Eccentric locking collar type

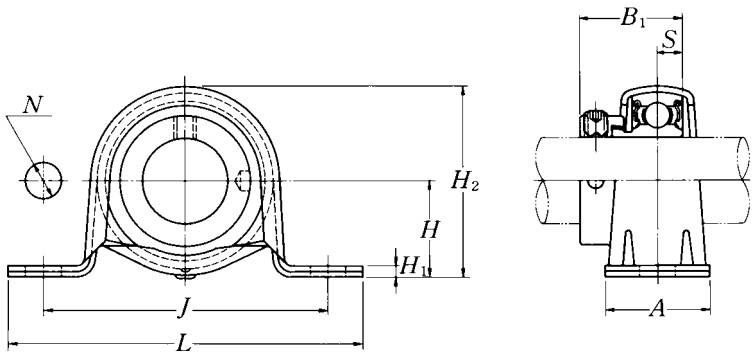


| Shaft dia. mm / inch | Unit number | Nominal dimensions mm / inch H | L | J | A | N | H1 | H2 | B1 | S | Bolt size mm / inch | Bearing number |
|---|---|---|---|---|---|---|---|---|---|---|---|---|
| 12 | AELPP201W3 | 22.2 | 86 | 68 | 25 | 9.5 | 3.2 | 43.8 | 28.6 | 6.5 | M 8 | AEL201W3 |
| 1/2 | AELPP201-008W3 | 7/8 | 3 3/8 | 2 11/16 | 31/32 | 3/8 | 0.126 | 1 23/32 | 1.126 | 0.256 | 5/16 | AEL201-008W3 |
| 15 | AELPP202W3 | 22.2 | 86 | 68 | 25 | 9.5 | 3.2 | 43.8 | 28.6 | 6.5 | M 8 | AEL202W3 |
| 9/16 | AELPP202-009W3 | 7/8 | 3 3/8 | 2 11/16 | 31/32 | 3/8 | 0.126 | 1 23/32 | 1.126 | 0.256 | 5/16 | AEL202-009W3 |
| 5/8 | AELPP202-010W3 | | | | | | | | | | | AEL202-010W3 |
| 17 | AELPP203W3 | 22.2 | 86 | 68 | 25 | 9.5 | 3.2 | 43.8 | 28.6 | 6.5 | M 8 | AEL203W3 |
| 11/16 | AELPP203-011W3 | 7/8 | 3 3/8 | 2 11/16 | 31/32 | 3/8 | 0.126 | 1 23/32 | 1.126 | 0.256 | 5/16 | AEL203-011W3 |
| 20 | AELPP204W3 | 25.4 | 98 | 76 | 32 | 9.5 | 3.2 | 50.5 | 31 | 7.5 | M 8 | AEL204W3 |
| 3/4 | AELPP204-012W3 | 1 | 3 27/32 | 3 | 1 1/4 | 3/8 | 0.126 | 2 | 1.220 | 0.295 | 5/16 | AEL204-012W3 |
| 25 | AELPP205W3 | 28.6 | 108 | 86 | 32 | 11.5 | 4 | 56.6 | 31 | 7.5 | M10 | AEL205W3 |
| 13/16 | AELPP205-013W3 | | | | | | | | | | | AEL205-013W3 |
| 7/8 | AELPP205-014W3 | 1 1/8 | 4 1/4 | 3 3/8 | 1 1/4 | 29/64 | 0.157 | 2 7/32 | 1.220 | 0.295 | 3/8 | AEL205-014W3 |
| 15/16 | AELPP205-015W3 | | | | | | | | | | | AEL205-015W3 |
| 1 | AELPP205-100W3 | | | | | | | | | | | AEL205-100W3 |
| 30 | AELPP206W3 | 33.3 | 117 | 95 | 38 | 11.5 | 4 | 66.3 | 35.7 | 9 | M10 | AEL206W3 |
| 1 1/16 | AELPP206-101W3 | | | | | | | | | | | AEL206-101W3 |
| 1 1/8 | AELPP206-102W3 | 1 5/16 | 4 19/32 | 3 3/4 | 1 1/2 | 29/64 | 0.157 | 2 5/8 | 1.406 | 0.354 | 3/8 | AEL206-102W3 |
| 1 3/16 | AELPP206-103W3 | | | | | | | | | | | AEL206-103W3 |
| 1 1/4 | AELPP206-104W3 | | | | | | | | | | | AEL206-104W3 |
| 35 | AELPP207W3 | 39.7 | 129 | 106 | 42 | 11.5 | 4.6 | 78 | 38.9 | 9.5 | M10 | AEL207W3 |
| 1 1/4 | AELPP207-104W3 | | | | | | | | | | | AEL207-104W3 |
| 1 5/16 | AELPP207-105W3 | 1 9/16 | 5 3/32 | 4 3/16 | 1 21/32 | 29/64 | 0.181 | 3 1/16 | 1.531 | 0.374 | 3/8 | AEL207-105W3 |
| 1 3/8 | AELPP207-106W3 | | | | | | | | | | | AEL207-106W3 |
| 1 7/16 | AELPP207-107W3 | | | | | | | | | | | AEL207-107W3 |

Remarks: 1) The permissible load only applies in applications where the load is stable and the speed is 2400 $min^{-1}$ or less.
The mounting surface should be flat.

| Housing number | Mass of unit kg lb | Max. load [1] recommended N lbf radial | axial |
|---|---|---|---|
| PP203<br>PP203 | 0.2<br>0.4 | 2 000<br>440 | 800<br>160 |
| PP203<br>PP203<br>PP203 | 0.2<br>0.4 | 2 000<br>440 | 800<br>160 |
| PP203<br>PP203 | 0.2<br>0.4 | 2 000<br>440 | 800<br>160 |
| PP204<br>PP204 | 0.3<br>0.7 | 2 500<br>550 | 1 000<br>200 |
| PP205<br>PP205<br>PP205<br>PP205<br>PP205 | 0.3<br>0.7 | 3 500<br>770 | 1 400<br>280 |
| PP206<br>PP206<br>PP206<br>PP206<br>PP206 | 0.5<br>1.1 | 4 000<br>880 | 1 600<br>320 |
| PP207<br>PP207<br>PP207<br>PP207<br>PP207 | 0.8<br>1.8 | 4 500<br>990 | 1 800<br>360 |

**Pillow blocks pressed steel housing with rubber ring**
**Eccentric locking collar type**

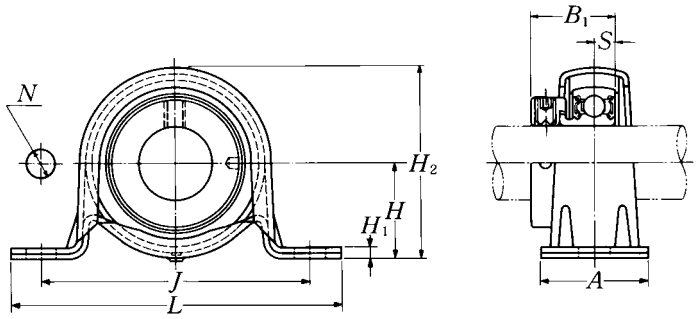


| Shaft dia. mm / inch | Unit number | Nominal dimensions H | L | J | A | N (mm / inch) | H1 | H2 | B1 | S | Bolt size mm / inch | Bearing number |
|---|---|---|---|---|---|---|---|---|---|---|---|---|
| **12** | **AELRPP201W3** | 25.4 | 98 | 76 | 32 | 9.5 | 3.2 | 50.5 | 28.6 | 6.5 | M 8 | AEL201W3 |
| 1/2 | **AELRPP201-008W3** | 1 | 3 27/32 | 3 | 1 1/4 | 3/8 | 0.126 | 2 | 1.126 | 0.256 | 5/16 | AEL201-008W3 |
| **15** | **AELRPP202W3** | 25.4 | 98 | 76 | 32 | 9.5 | 3.2 | 50.5 | 28.6 | 6.5 | M 8 | AEL202W3 |
| 9/16 | **AELRPP202-009W3** | 1 | 3 27/32 | 3 | 1 1/4 | 3/8 | 0.126 | 2 | 1.126 | 0.256 | 5/16 | AEL202-009W3 |
| 5/8 | **AELRPP202-010W3** | | | | | | | | | | | AEL202-010W3 |
| **17** | **AELRPP203W3** | 25.4 | 98 | 76 | 32 | 9.5 | 3.2 | 50.5 | 28.6 | 6.5 | M 8 | AEL203W3 |
| 11/16 | **AELRPP203-011W3** | 1 | 3 27/32 | 3 | 1 1/4 | 3/8 | 0.126 | 2 | 1.126 | 0.256 | 5/16 | AEL203-011W3 |
| **20** | **AELRPP204W3** | 28.6 | 108 | 86 | 32 | 11.5 | 4 | 56.6 | 31 | 7.5 | M10 | AEL204W3 |
| 3/4 | **AELRPP204-012W3** | 1 1/8 | 4 1/4 | 3 3/8 | 1 1/4 | 29/64 | 0.157 | 2 7/32 | 1.220 | 0.295 | 3/8 | AEL204-012W3 |
| **25** | **AELRPP205W3** | 33.3 | 117 | 95 | 38 | 11.5 | 4 | 66.3 | 31 | 7.5 | M10 | AEL205W3 |
| 13/16 | **AELRPP205-013W3** | | | | | | | | | | | AEL205-013W3 |
| 7/8 | **AELRPP205-014W3** | 1 5/16 | 4 19/32 | 3 3/4 | 1 1/2 | 29/64 | 0.157 | 2 5/8 | 1.220 | 0.295 | 3/8 | AEL205-014W3 |
| 15/16 | **AELRPP205-015W3** | | | | | | | | | | | AEL205-015W3 |
| **1** | **AELRPP205-100W3** | | | | | | | | | | | AEL205-100W3 |
| **30** | **AELRPP206W3** | 39.7 | 129 | 106 | 42 | 11.5 | 4.6 | 78 | 35.7 | 9 | M10 | AEL206W3 |
| 1 1/16 | **AELRPP206-101W3** | | | | | | | | | | | AEL206-101W3 |
| 1 1/8 | **AELRPP206-102W3** | 1 9/16 | 5 3/32 | 4 3/16 | 1 21/32 | 29/64 | 0.181 | 3 1/16 | 1.406 | 0.354 | 3/8 | AEL206-102W3 |
| 1 3/16 | **AELRPP206-103W3** | | | | | | | | | | | AEL206-103W3 |
| 1 1/4 | **AELRPP206-104W3** | | | | | | | | | | | AEL206-104W3 |

Remarks: 1) The permissible load only applies in applications where the load is stable and the speed is 2400 $min^{-1}$ or less.
The mounting surface should be flat.
2) When an anti-vibration rubber ring is used, the self alignment capability will be reduce.

| Housing number | | Mass of unit | Max. load [1] recommended | |
|---|---|---|---|---|
| | | kg lb | N lbf | |
| rubber ring | steel | | radial | axial |
| R201 | PP204 | 0.2 | 1 000 | 200 |
| R201 | PP204 | 0.4 | 220 | 40 |
| R201 | PP204 | 0.2 | 1 000 | 200 |
| R201 | PP204 | 0.4 | 220 | 40 |
| R201 | PP204 | | | |
| R201 | PP204 | 0.2 | 1 000 | 200 |
| R201 | PP204 | 0.4 | 220 | 40 |
| R204 | PP205 | 0.3 | 1 150 | 200 |
| R204 | PP205 | 0.7 | 250 | 40 |
| R205 | PP206 | 0.4 | 1 300 | 200 |
| R205 | PP206 | | | |
| R205 | PP206 | 0.9 | 280 | 40 |
| R205 | PP206 | | | |
| R205 | PP206 | | | |
| R206 | PP207 | 0.6 | 1 500 | 200 |
| R206 | PP207 | | | |
| R206 | PP207 | 1.3 | 330 | 40 |
| R206 | PP207 | | | |
| R206 | PP207 | | | |

## Square flanged units cast housing
## Eccentric locking collar type

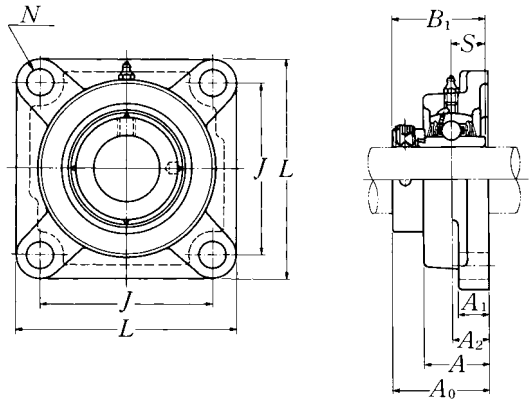


| Shaft dia. mm / inch | Unit number [1] | Nominal dimensions mm / inch L | J | A2 | A1 | A | N | A0 | B1 | S | Bolt size mm / inch | Bearing number |
|---|---|---|---|---|---|---|---|---|---|---|---|---|
| 20 | UELFU204D1W3 | 86 | 63.5 | 19 | 15 | 29.5 | 11.5 | 45.6 | 43.7 | 17.1 | M10 | UEL204D1W3 |
| 3/4 | UELFU204-012D1W3 | 3 3/8 | 2 1/2 | 3/4 | 19/32 | 1 5/32 | 29/64 | 1 51/64 | 1.720 | 0.673 | 3/8 | UEL204-012D1W3 |
| 25 | UELFU205D1W3 | 96 | 70 | 19 | 15 | 30 | 11.5 | 45.9 | 44.4 | 17.45 | M10 | UEL205D1W3 |
| 13/16 | UELFU205-013D1W3 | | | | | | | | | | | UEL205-013D1W3 |
| 7/8 | UELFU205-014D1W3 | 3 25/32 | 2 3/4 | 3/4 | 19/32 | 1 3/16 | 29/64 | 1 13/16 | 1.748 | 0.687 | 3/8 | UEL205-014D1W3 |
| 15/16 | UELFU205-015D1W3 | | | | | | | | | | | UEL205-015D1W3 |
| 1 | UELFU205-100D1W3 | | | | | | | | | | | UEL205-100D1W3 |
| 30 | UELFU206D1W3 | 109 | 82.5 | 20 | 16 | 33 | 11.5 | 50.1 | 48.4 | 18.25 | M10 | UEL206D1W3 |
| 1 1/16 | UELFU206-101D1W3 | | | | | | | | | | | UEL206-101D1W3 |
| 1 1/8 | UELFU206-102D1W3 | 4 9/32 | 3 1/4 | 25/32 | 5/8 | 1 5/16 | 29/64 | 1 31/32 | 1.906 | 0.719 | 3/8 | UEL206-102D1W3 |
| 1 3/16 | UELFU206-103D1W3 | | | | | | | | | | | UEL206-103D1W3 |
| 1 1/4 | UELFU206-104D1W3 | | | | | | | | | | | UEL206-104D1W3 |
| 35 | UELFU207D1W3 | 118 | 92 | 21 | 17 | 36 | 14 | 53.3 | 51.1 | 18.8 | M12 | UEL207D1W3 |
| 1 1/4 | UELFU207-104D1W3 | | | | | | | | | | | UEL207-104D1W3 |
| 1 5/16 | UELFU207-105D1W3 | 4 21/32 | 3 5/8 | 53/64 | 21/32 | 1 13/32 | 35/64 | 2 3/32 | 2.012 | 0.740 | 1/2 | UEL207-105D1W3 |
| 1 3/8 | UELFU207-106D1W3 | | | | | | | | | | | UEL207-106D1W3 |
| 1 7/16 | UELFU207-107D1W3 | | | | | | | | | | | UEL207-107D1W3 |
| 40 | UELFU208D1W3 | 131 | 101.5 | 24 | 17 | 39 | 14 | 58.9 | 56.3 | 21.4 | M12 | UEL208D1W3 |
| 1 1/2 | UELFU208-108D1W3 | 5 5/32 | 4 | 15/16 | 21/32 | 1 17/32 | 35/64 | 2 5/16 | 2.217 | 0.843 | 1/2 | UEL208-108D1W3 |
| 1 9/16 | UELFU208-109D1W3 | | | | | | | | | | | UEL208-109D1W3 |
| 45 | UELFU209D1W3 | 137 | 105 | 24 | 18 | 40 | 16 | 58.9 | 56.3 | 21.4 | M14 | UEL209D1W3 |
| 1 5/8 | UELFU209-110D1W3 | | | | | | | | | | | UEL209-110D1W3 |
| 1 11/16 | UELFU209-111D1W3 | 5 13/32 | 4 9/64 | 15/16 | 23/32 | 1 9/16 | 5/8 | 2 5/16 | 2.217 | 0.843 | 1/2 | UEL209-111D1W3 |
| 1 3/4 | UELFU209-112D1W3 | | | | | | | | | | | UEL209-112D1W3 |
| 50 | UELFU210D1W3 | 144 | 111 | 28 | 20 | 46 | 18 | 66.1 | 62.7 | 24.6 | M16 | UEL210D1W3 |
| 1 13/16 | UELFU210-113D1W3 | | | | | | | | | | | UEL210-113D1W3 |
| 1 7/8 | UELFU210-114D1W3 | 5 21/32 | 4 3/8 | 1 7/64 | 25/32 | 1 13/16 | 45/64 | 2 39/64 | 2.469 | 0.969 | 5/8 | UEL210-114D1W3 |
| 1 15/16 | UELFU210-115D1W3 | | | | | | | | | | | UEL210-115D1W3 |
| 2 | UELFU210-200D1W3 | | | | | | | | | | | UEL210-200D1W3 |

Remarks: 1) These numbers indicate relubricatable type. If maintenance free type is needed, please order without suffix "D1".
Note: Please refer to page 36 for size of grease fitting.

| Housing [1)] number | Mass of unit kg | lb |
|---|---|---|
| FU204D1 | 0.8 | |
| FU204D1 | | 1.8 |
| FU205D1 | 1.0 | |
| FU205D1 | | |
| FU205D1 | | 2.2 |
| FU205D1 | | |
| FU205D1 | | |
| FU206D1 | 1.4 | |
| FU206D1 | | |
| FU206D1 | | 3.1 |
| FU206D1 | | |
| FU206D1 | | |
| FU207D1 | 1.7 | |
| FU207D1 | | |
| FU207D1 | | 3.8 |
| FU207D1 | | |
| FU207D1 | | |
| FU208D1 | 2.2 | |
| FU208D1 | | 4.9 |
| FU208D1 | | |
| FU209D1 | 2.4 | |
| FU209D1 | | |
| FU209D1 | | 5.3 |
| FU209D1 | | |
| FU210D1 | 2.9 | |
| FU210D1 | | |
| FU210D1 | | 6.4 |
| FU210D1 | | |
| FU210D1 | | |

## Square flanged units cast housing
## Eccentric locking collar type

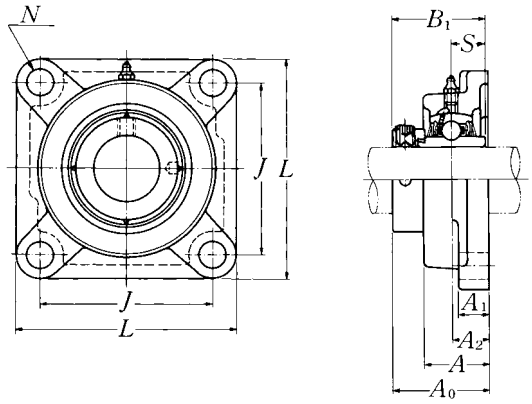


| Shaft dia. mm / inch | Unit number [1] | Nominal dimensions mm / inch L | J | A2 | A1 | A | N | A0 | B1 | S | Bolt size mm / inch | Bearing number |
|---|---|---|---|---|---|---|---|---|---|---|---|---|
| 55 | UELFU211D1W3 | 163 | 130 | 31 | 21 | 49 | 18 | 74.6 | 71.4 | 27.75 | M16 | UEL211D1W3 |
| 2 | UELFU211-200D1W3 | | | | | | | | | | | UEL211-200D1W3 |
| 2 1/16 | UELFU211-201D1W3 | 6 13/32 | 5 1/8 | 1 7/32 | 13/16 | 1 15/16 | 45/64 | 2 15/16 | 2.811 | 1.093 | 5/8 | UEL211-201D1W3 |
| 2 1/8 | UELFU211-202D1W3 | | | | | | | | | | | UEL211-202D1W3 |
| 2 3/16 | UELFU211-203D1W3 | | | | | | | | | | | UEL211-203D1W3 |
| 60 | UELFU212D1W3 | 175 | 143 | 34 | 21 | 53 | 18 | 80.8 | 77.8 | 30.95 | M16 | UEL212D1W3 |
| 2 1/4 | UELFU212-204D1W3 | | | | | | | | | | | UEL212-204D1W3 |
| 2 5/16 | UELFU212-205D1W3 | 6 7/8 | 5 5/8 | 1 11/32 | 13/16 | 2 3/32 | 45/64 | 3 3/16 | 3.063 | 1.219 | 5/8 | UEL212-205D1W3 |
| 2 3/8 | UELFU212-206D1W3 | | | | | | | | | | | UEL212-206D1W3 |
| 2 7/16 | UELFU212-207D1W3 | | | | | | | | | | | UEL212-207D1W3 |
| 65 | UELFU213D1W3 | 187 | 149 | 38 | 22 | 59 | 20.5 | 89.55 | 85.7 | 34.15 | M18 | UEL213D1W3 |
| 2 1/2 | UELFU213-208D1W3 | 7 3/8 | 5 55/64 | 1 1/2 | 7/8 | 2 5/16 | 13/16 | 3 17/32 | 3.374 | 1.344 | 5/8 | UEL213-208D1W3 |
| 2 9/16 | UELFU213-209D1W3 | | | | | | | | | | | UEL213-209D1W3 |
| 70 | UELFU214D1W3 | 193 | 152 | 38 | 22 | 62 | 20.5 | 89.55 | 85.7 | 34.15 | M18 | UEL214D1W3 |
| 2 5/8 | UELFU214-210D1W3 | | | | | | | | | | | UEL214-210D1W3 |
| 2 11/16 | UELFU214-211D1W3 | 7 19/32 | 5 63/64 | 1 1/2 | 7/8 | 2 7/16 | 13/16 | 3 17/32 | 3.374 | 1.344 | 5/8 | UEL214-211D1W3 |
| 2 3/4 | UELFU214-212D1W3 | | | | | | | | | | | UEL214-212D1W3 |
| 75 | UELFU215D1W3 | 200 | 159 | 41 | 22 | 64 | 20.5 | 95.7 | 92 | 37.3 | M18 | UEL215D1W3 |
| 2 13/16 | UELFU215-213D1W3 | | | | | | | | | | | UEL215-213D1W3 |
| 2 7/8 | UELFU215-214D1W3 | 7 7/8 | 6 17/64 | 1 39/64 | 7/8 | 2 33/64 | 13/16 | 3 49/64 | 3.622 | 1.469 | 5/8 | UEL215-214D1W3 |
| 2 15/16 | UELFU215-215D1W3 | | | | | | | | | | | UEL215-215D1W3 |
| 3 | UELFU215-300D1W3 | | | | | | | | | | | UEL215-300D1W3 |

Remarks: 1) These numbers indicate relubricatable type. If maintenance free type is needed, please order without suffix "D1".
Note: Please refer to page 36 for size of grease fitting.

| Housing [1)] number | Mass of unit kg | lb |
|---|---|---|
| FU211D1 | 3.9 | |
| FU211D1 | | |
| FU211D1 | 8.6 | |
| FU211D1 | | |
| FU211D1 | | |
| FU212D1 | 4.7 | |
| FU212D1 | | |
| FU212D1 | 10 | |
| FU212D1 | | |
| FU212D1 | | |
| FU213D1 | 6.3 | |
| FU213D1 | 14 | |
| FU213D1 | | |
| FU214D1 | 6.7 | |
| FU214D1 | | |
| FU214D1 | 15 | |
| FU214D1 | | |
| FU215D1 | 7.0 | |
| FU215D1 | | |
| FU215D1 | 15 | |
| FU215D1 | | |
| FU215D1 | | |

## Square flanged units cast housing
## Eccentric locking collar type

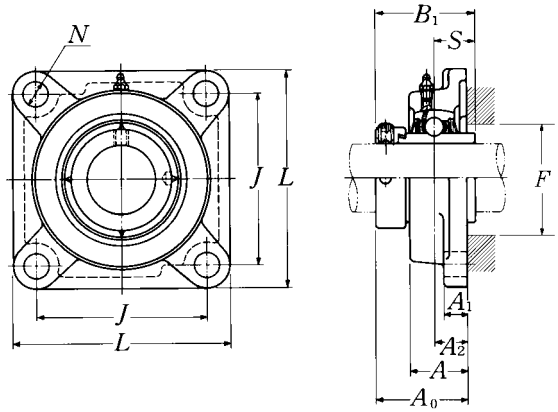


| Shaft dia. mm / inch | Unit number [1] | Nominal dimensions mm / inch L | J | A2 | A1 | A | N | A0 | B1 | S | F min. | Bolt size mm / inch |
|---|---|---|---|---|---|---|---|---|---|---|---|---|
| 20 | UELF204D1W3 | 86 | 64 | 15 | 11 | 25.5 | 12 | 41.6 | 43.7 | 17.1 | 34 | M10 |
| 3/4 | UELF204-012D1W3 | 3 3/8 | 2 33/64 | 19/32 | 7/16 | 1 | 15/32 | 1 41/64 | 1.720 | 0.673 | 1 11/32 | 3/8 |
| 25 | UELF205D1W3 | 95 | 70 | 16 | 13 | 27 | 12 | 42.9 | 44.4 | 17.45 | 38 | M10 |
| 13/16 | UELF205-013D1W3 | | | | | | | | | | | |
| 7/8 | UELF205-014D1W3 | 3 3/4 | 2 3/4 | 5/8 | 1/2 | 1 1/16 | 15/32 | 1 11/16 | 1.748 | 0.687 | 1 1/2 | 3/8 |
| 15/16 | UELF205-015D1W3 | | | | | | | | | | | |
| 1 | UELF205-100D1W3 | | | | | | | | | | | |
| 30 | UELF206D1W3 | 108 | 83 | 18 | 13 | 31 | 12 | 48.1 | 48.4 | 18.25 | 45 | M10 |
| 1 1/16 | UELF206-101D1W3 | | | | | | | | | | | |
| 1 1/8 | UELF206-102D1W3 | 4 1/4 | 3 17/64 | 45/64 | 1/2 | 1 7/32 | 15/32 | 1 57/64 | 1.906 | 0.719 | 1 25/32 | 3/8 |
| 1 3/16 | UELF206-103D1W3 | | | | | | | | | | | |
| 1 1/4 | UELF206-104D1W3 | | | | | | | | | | | |
| 35 | UELF207D1W3 | 117 | 92 | 19 | 15 | 34 | 14 | 51.3 | 51.1 | 18.8 | 51 | M12 |
| 1 1/4 | UELF207-104D1W3 | | | | | | | | | | | |
| 1 5/16 | UELF207-105D1W3 | 4 19/32 | 3 5/8 | 3/4 | 19/32 | 1 11/32 | 35/64 | 2 1/64 | 2.012 | 0.740 | 2 | 7/16 |
| 1 3/8 | UELF207-106D1W3 | | | | | | | | | | | |
| 1 7/16 | UELF207-107D1W3 | | | | | | | | | | | |
| 40 | UELF208D1W3 | 130 | 102 | 21 | 15 | 36 | 16 | 55.9 | 56.3 | 21.4 | 57 | M14 |
| 1 1/2 | UELF208-108D1W3 | 5 1/8 | 4 1/64 | 53/64 | 19/32 | 1 13/32 | 5/8 | 2 13/64 | 2.217 | 0.843 | 2 1/4 | 1/2 |
| 1 9/16 | UELF208-109D1W3 | | | | | | | | | | | |
| 45 | UELF209D1W3 | 137 | 105 | 22 | 16 | 38 | 16 | 56.9 | 56.3 | 21.4 | 62 | M14 |
| 1 5/8 | UELF209-110D1W3 | | | | | | | | | | | |
| 1 11/16 | UELF209-111D1W3 | 5 13/32 | 4 9/64 | 55/64 | 5/8 | 1 1/2 | 5/8 | 2 15/64 | 2.217 | 0.843 | 2 7/16 | 1/2 |
| 1 3/4 | UELF209-112D1W3 | | | | | | | | | | | |
| 50 | UELF210D1W3 | 143 | 111 | 22 | 16 | 40 | 16 | 60.1 | 62.7 | 24.6 | 67 | M14 |
| 1 13/16 | UELF210-113D1W3 | | | | | | | | | | | |
| 1 7/8 | UELF210-114D1W3 | 5 5/8 | 4 3/8 | 55/64 | 5/8 | 1 9/16 | 5/8 | 2 23/64 | 2.469 | 0.969 | 2 41/64 | 1/2 |
| 1 15/16 | UELF210-115D1W3 | | | | | | | | | | | |
| 2 | UELF210-200D1W3 | | | | | | | | | | | |

Remarks: 1) These numbers indicate relubricatable type. If maintenance free type is needed, please order without suffix "D1".
Note: Please refer to page 36 for size of grease fitting.

| Bearing number | Housing [1)] number | Mass of unit kg lb |
|---|---|---|
| UEL204D1W3 | F204D1 | 0.6 |
| UEL204-012D1W3 | F204D1 | 1.3 |
| UEL205D1W3 | F205D1 | 0.9 |
| UEL205-013D1W3 | F205D1 | 2.0 |
| UEL205-014D1W3 | F205D1 | |
| UEL205-015D1W3 | F205D1 | |
| UEL205-100D1W3 | F205D1 | |
| UEL206D1W3 | F206D1 | 1.2 |
| UEL206-101D1W3 | F206D1 | 2.6 |
| UEL206-102D1W3 | F206D1 | |
| UEL206-103D1W3 | F206D1 | |
| UEL206-104D1W3 | F206D1 | |
| UEL207D1W3 | F207D1 | 1.6 |
| UEL207-104D1W3 | F207D1 | 3.5 |
| UEL207-105D1W3 | F207D1 | |
| UEL207-106D1W3 | F207D1 | |
| UEL207-107D1W3 | F207D1 | |
| UEL208D1W3 | F208D1 | 1.9 |
| UEL208-108D1W3 | F208D1 | 4.2 |
| UEL208-109D1W3 | F208D1 | |
| UEL209D1W3 | F209D1 | 2.3 |
| UEL209-110D1W3 | F209D1 | 5.1 |
| UEL209-111 | F209D1 | |
| UEL209-112 | F209D1 | |
| UEL210D1W3 | F210D1 | 2.7 |
| UEL210-113D1W3 | F210D1 | 6.0 |
| UEL210-114D1W3 | F210D1 | |
| UEL210-115D1W3 | F210D1 | |
| UEL210-200D1W3 | F210D1 | |

## Square flanged units cast housing
## Eccentric locking collar type

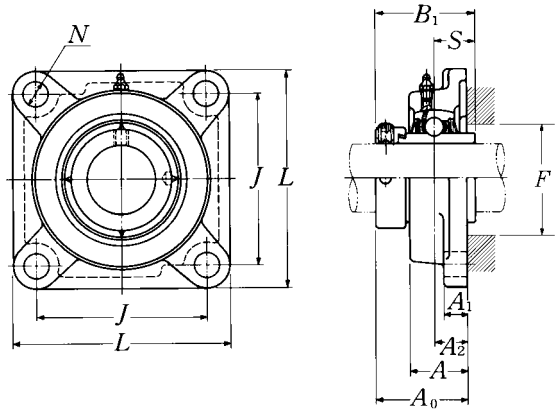


| Shaft dia. mm / inch | Unit number [1] | Nominal dimensions mm / inch: L | J | A2 | A1 | A | N | A0 | B1 | S | F min. | Bolt size mm / inch |
|---|---|---|---|---|---|---|---|---|---|---|---|---|
| 55 | UELF211D1W3 | 162 | 130 | 25 | 18 | 43 | 19 | 68.6 | 71.4 | 27.75 | 73 | M16 |
| 2 | UELF211-200D1W3 | | | | | | | | | | | |
| 2 1/16 | UELF211-201D1W3 | 6 3/8 | 5 1/8 | 63/64 | 23/32 | 1 11/16 | 3/4 | 2 45/64 | 2.811 | 1.093 | 2 7/8 | 5/8 |
| 2 1/8 | UELF211-202D1W3 | | | | | | | | | | | |
| 2 3/16 | UELF211-203D1W3 | | | | | | | | | | | |
| 60 | UELF212D1W3 | 175 | 143 | 29 | 18 | 48 | 19 | 75.8 | 77.8 | 30.95 | 81 | M16 |
| 2 1/4 | UELF212-204D1W3 | | | | | | | | | | | |
| 2 5/16 | UELF212-205D1W3 | 6 7/8 | 5 5/8 | 1 9/64 | 23/32 | 1 7/8 | 3/4 | 2 63/64 | 3.063 | 1.219 | 3 3/16 | 5/8 |
| 2 3/8 | UELF212-206D1W3 | | | | | | | | | | | |
| 2 7/16 | UELF212-207D1W3 | | | | | | | | | | | |
| 65 | UELF213D1W3 | 187 | 149 | 30 | 22 | 50 | 19 | 81.55 | 85.7 | 34.15 | 87 | M16 |
| 2 1/2 | UELF213-208D1W3 | 7 3/8 | 5 55/64 | 1 3/16 | 7/8 | 1 31/32 | 3/4 | 3 13/16 | 3.374 | 1.344 | 3 7/16 | 5/8 |
| 2 9/16 | UELF213-209D1W3 | | | | | | | | | | | |
| 70 | UELF214D1W3 | 193 | 152 | 31 | 22 | 54 | 19 | 82.55 | 85.7 | 34.15 | 91 | M16 |
| 2 5/8 | UELF214-210D1W3 | | | | | | | | | | | |
| 2 11/16 | UELF214-211D1W3 | 7 19/32 | 5 63/64 | 1 7/32 | 7/8 | 2 1/8 | 3/4 | 3 1/4 | 3.374 | 1.344 | 3 37/64 | 5/8 |
| 2 3/4 | UELF214-212D1W3 | | | | | | | | | | | |
| 75 | UELF215D1W3 | 200 | 159 | 34 | 22 | 56 | 19 | 88.7 | 92 | 37.3 | 97 | M16 |
| 2 13/16 | UELF215-213D1W3 | | | | | | | | | | | |
| 2 7/8 | UELF215-214D1W3 | 7 7/8 | 6 17/64 | 1 11/32 | 7/8 | 2 7/32 | 3/4 | 3 31/64 | 3.622 | 1.469 | 3 13/16 | 5/8 |
| 2 15/16 | UELF215-215D1W3 | | | | | | | | | | | |
| 3 | UELF215-300D1W3 | | | | | | | | | | | |

Remarks: 1) These numbers indicate relubricatable type. If maintenance free type is needed, please order without suffix "D1".
Note: Please refer to page 36 for size of grease fitting.

| Bearing number | Housing [1)] number | Mass of unit kg lb |
|---|---|---|
| UEL211D1W3 | F211D1 | 3.6 |
| UEL211-200D1W3 | F211D1 | 7.9 |
| UEL211-201D1W3 | F211D1 | |
| UEL211-202D1W3 | F211D1 | |
| UEL211-203D1W3 | F211D1 | |
| UEL212D1W3 | F212D1 | 4.2 |
| UEL212-204D1W3 | F212D1 | 9.3 |
| UEL212-205D1W3 | F212D1 | |
| UEL212-206D1W3 | F212D1 | |
| UEL212-207D1W3 | F212D1 | |
| UEL213D1W3 | F213D1 | 6.1 |
| UEL213-208D1W3 | F213D1 | 13 |
| UEL213-209D1W3 | F213D1 | |
| UEL214D1W3 | F214D1 | 6.6 |
| UEL214-210D1W3 | F214D1 | 15 |
| UEL214-211D1W3 | F214D1 | |
| UEL214-212D1W3 | F214D1 | |
| UEL215D1W3 | F215D1 | 6.9 |
| UEL215-213D1W3 | F215D1 | 15 |
| UEL215-214D1W3 | F215D1 | |
| UEL215-215D1W3 | F215D1 | |
| UEL215-300D1W3 | F215D1 | |

## Square flanged units cast housing
## Eccentric locking collar type

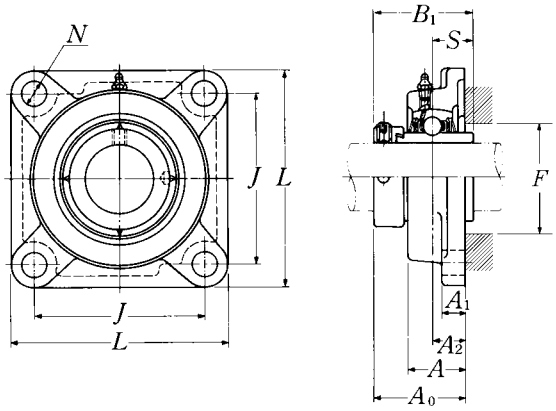


| Shaft dia. mm / inch | Unit number [1] | Nominal dimensions | | | | | | | | | | Bolt size mm / inch |
|---|---|---|---|---|---|---|---|---|---|---|---|---|
| | | | | | | mm | inch | | | | | |
| | | $L$ | $J$ | $A_2$ | $A_1$ | $A$ | $N$ | $A_0$ | $B_1$ | $S$ | $F$ min. | |
| **25** | **UELF305D1W3** | 110 | 80 | 16 | 13 | 29 | 16 | 46.1 | 46.8 | 16.7 | 41 | M14 |
| 13/16 | **UELF305-013D1W3** | | | | | | | | | | | |
| 7/8 | **UELF305-014D1W3** | 4 11/32 | 3 5/32 | 5/8 | 1/2 | 1 5/32 | 5/8 | 1 3/16 | 1.843 | 0.657 | 1 39/64 | 1/2 |
| 15/16 | **UELF305-015D1W3** | | | | | | | | | | | |
| **1** | **UELF305-100D1W3** | | | | | | | | | | | |
| **30** | **UELF306D1W3** | 125 | 95 | 18 | 15 | 32 | 16 | 50.5 | 50 | 17.5 | 49 | M14 |
| 1 1/16 | **UELF306-101D1W3** | | | | | | | | | | | |
| 1 1/8 | **UELF306-102D1W3** | 4 29/32 | 3 47/64 | 45/64 | 19/32 | 1 1/4 | 5/8 | 1 63/64 | 1.969 | 0.689 | 1 15/16 | 1/2 |
| 1 3/16 | **UELF306-103D1W3** | | | | | | | | | | | |
| **35** | **UELF307D1W3** | 135 | 100 | 20 | 16 | 36 | 19 | 53.3 | 51.6 | 18.3 | — | M16 |
| 1 1/4 | **UELF307-104D1W3** | | | | | | | | | | | |
| 1 5/16 | **UELF307-105D1W3** | 5 5/16 | 3 15/16 | 25/32 | 5/8 | 1 13/32 | 3/4 | 2 3/32 | 2.031 | 0.720 | — | 5/8 |
| 1 3/8 | **UELF307-106D1W3** | | | | | | | | | | | |
| 1 7/16 | **UELF307-107D1W3** | | | | | | | | | | | |
| **40** | **UELF308D1W3** | 150 | 112 | 23 | 17 | 40 | 19 | 60.3 | 57.1 | 19.8 | — | M16 |
| 1 1/2 | **UELF308-108D1W3** | 5 29/32 | 4 13/32 | 29/32 | 21/32 | 1 9/16 | 3/4 | 2 3/8 | 2.248 | 0.780 | — | 5/8 |
| 1 9/16 | **UELF308-109D1W3** | | | | | | | | | | | |
| **45** | **UELF309D1W3** | 160 | 125 | 25 | 18 | 44 | 19 | 63.9 | 58.7 | 19.8 | — | M16 |
| 1 5/8 | **UELF309-110D1W3** | | | | | | | | | | | |
| 1 11/16 | **UELF309-111D1W3** | 6 5/16 | 4 59/64 | 63/64 | 23/32 | 1 23/32 | 3/4 | 2 33/64 | 2.311 | 0.780 | — | 5/8 |
| 1 3/4 | **UELF309-112D1W3** | | | | | | | | | | | |
| **50** | **UELF310D1W3** | 175 | 132 | 28 | 19 | 48 | 23 | 70 | 66.6 | 24.6 | — | M20 |
| 1 13/16 | **UELF310-113D1W3** | | | | | | | | | | | |
| 1 7/8 | **UELF310-114D1W3** | 6 7/8 | 5 13/64 | 1 7/64 | 3/4 | 1 7/8 | 29/32 | 2 3/4 | 2.622 | 0.969 | — | 3/4 |
| 1 15/16 | **UELF310-115D1W3** | | | | | | | | | | | |
| **55** | **UELF311D1W3** | 185 | 140 | 30 | 20 | 52 | 23 | 75.2 | 73 | 27.8 | — | M20 |
| **2** | **UELF311-200D1W3** | | | | | | | | | | | |
| 2 1/16 | **UELF311-201D1W3** | 7 9/32 | 5 33/64 | 1 3/16 | 25/32 | 2 1/16 | 29/32 | 2 61/64 | 2.874 | 1.094 | — | 3/4 |
| 2 1/8 | **UELF311-202D1W3** | | | | | | | | | | | |
| 2 3/16 | **UELF311-203D1W3** | | | | | | | | | | | |

Remarks: 1) These numbers indicate relubricatable type. If maintenance free type is needed, please order without suffix "D1"
2) Inner race face does not protrude from the housing face except UELF305 and UELF316.

Note: Please refer to page 36 for size of grease fitting.

| Bearing number | Housing [1)] number | Mass of unit kg | lb |
|---|---|---|---|
| UEL305D1W3 | F305D1 | 1.2 | |
| UEL305-013D1W3 | F305D1 | 2.6 | |
| UEL305-014D1W3 | F305D1 | | |
| UEL305-015D1W3 | F305D1 | | |
| UEL305-100D1W3 | F305D1 | | |
| UEL306D1W3 | F306D1 | 1.8 | |
| UEL306-101D1W3 | F306D1 | 4.0 | |
| UEL306-102D1W3 | F306D1 | | |
| UEL306-103D1W3 | F306D1 | | |
| UEL307D1W3 | F307D1 | 2.2 | |
| UEL307-104D1W3 | F307D1 | 4.9 | |
| UEL307-105D1W3 | F307D1 | | |
| UEL307-106D1W3 | F307D1 | | |
| UEL307-107D1W3 | F307D1 | | |
| UEL308D1W3 | F308D1 | 2.9 | |
| UEL308-108D1W3 | F308D1 | 6.4 | |
| UEL308-109D1W3 | F308D1 | | |
| UEL309D1W3 | F309D1 | 3.6 | |
| UEL309-110D1W3 | F309D1 | 7.9 | |
| UEL309-111D1W3 | F309D1 | | |
| UEL309-112D1W3 | F309D1 | | |
| UEL310D1W3 | F310D1 | 4.6 | |
| UEL310-113D1W3 | F310D1 | 10 | |
| UEL310-114D1W3 | F310D1 | | |
| UEL310-115D1W3 | F310D1 | | |
| UEL311D1W3 | F311D1 | 5.6 | |
| UEL311-200D1W3 | F311D1 | 12 | |
| UEL311-201D1W3 | F311D1 | | |
| UEL311-202D1W3 | F311D1 | | |
| UEL311-203D1W3 | F311D1 | | |

## Square flanged units cast housing
## Eccentric locking collar type

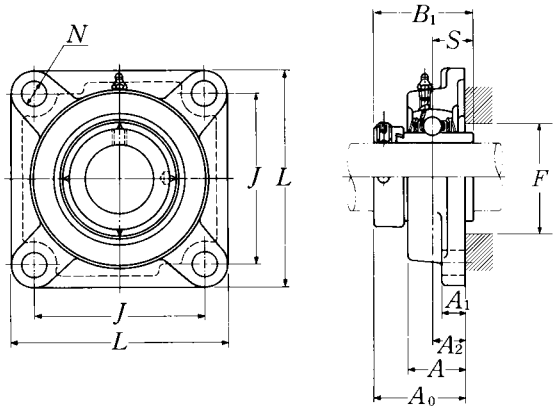


| Shaft dia. mm / inch | Unit number [1] | Nominal dimensions mm / inch: L | J | A2 | A1 | A | N | A0 | B1 | S | F min. | Bolt size mm / inch |
|---|---|---|---|---|---|---|---|---|---|---|---|---|
| 60 | UELF312D1W3 | 195 | 150 | 33 | 22 | 56 | 23 | 81.45 | 79.4 | 30.95 | — | M20 |
| 2 1/4 | UELF312-204D1W3 | | | | | | | | | | | |
| 2 5/16 | UELF312-205D1W3 | 7 11/16 | 5 29/32 | 1 19/64 | 7/8 | 2 7/32 | 29/32 | 3 13/64 | 3.126 | 1.219 | — | 3/4 |
| 2 3/8 | UELF312-206D1W3 | | | | | | | | | | | |
| 2 7/16 | UELF312-207D1W3 | | | | | | | | | | | |
| 65 | UELF313D1W3 | 208 | 166 | 33 | 22 | 58 | 23 | 86.15 | 85.7 | 32.55 | 93 | M20 |
| 2 1/2 | UELF313-208D1W3 | 8 3/16 | 6 17/32 | 1 19/64 | 7/8 | 2 9/32 | 29/32 | 3 25/64 | 3.374 | 1.281 | 3 21/32 | 3/4 |
| 2 9/16 | UELF313-209D1W3 | | | | | | | | | | | |
| 70 | UELF314D1W3 | 226 | 178 | 36 | 25 | 61 | 25 | 93.95 | 92.1 | 34.15 | — | M22 |
| 2 5/8 | UELF314-210D1W3 | | | | | | | | | | | |
| 2 11/16 | UELF314-211D1W3 | 8 29/32 | 6 1/64 | 1 27/64 | 31/32 | 2 13/32 | 63/64 | 3 45/64 | 3.626 | 1.344 | — | 7/8 |
| 2 3/4 | UELF314-212D1W3 | | | | | | | | | | | |
| 75 | UELF315D1W3 | 236 | 184 | 39 | 25 | 66 | 25 | 101.7 | 100 | 37.3 | 106 | M22 |
| 2 13/16 | UELF315-213D1W3 | | | | | | | | | | | |
| 2 7/8 | UELF315-214D1W3 | 9 9/32 | 7 1/4 | 1 17/32 | 31/32 | 2 19/32 | 63/64 | 4 | 3.937 | 1.469 | 4 11/64 | 7/8 |
| 2 15/16 | UELF315-215D1W3 | | | | | | | | | | | |
| 3 | UELF315-300D1W3 | | | | | | | | | | | |
| 80 | UELF316D1W3 | 250 | 196 | 38 | 27 | 68 | 31 | 103.9 | 106.4 | 40.5 | 112 | M27 |
| 3 1/16 | UELF316-301D1W3 | | | | | | | | | | | |
| 3 1/8 | UELF316-302D1W3 | 9 27/32 | 7 23/32 | 1 1/2 | 1 1/16 | 2 11/16 | 1 7/32 | 4 3/32 | 4.189 | 1.594 | 4 13/32 | 1 |
| 3 3/16 | UELF316-303D1W3 | | | | | | | | | | | |
| 85 | UELF317D1W3 | 260 | 204 | 44 | 27 | 74 | 31 | 111.45 | 109.5 | 42.05 | 119 | M27 |
| 3 1/4 | UELF317-304D1W3 | | | | | | | | | | | |
| 3 5/16 | UELF317-305D1W3 | 10 1/4 | 8 1/32 | 1 47/64 | 1 1/16 | 2 29/32 | 1 7/32 | 4 25/64 | 4.311 | 1.656 | 4 11/16 | 1 |
| 3 7/16 | UELF317-307D1W3 | | | | | | | | | | | |
| 90 | UELF318D1W3 | 280 | 216 | 44 | 30 | 76 | 35 | 116.25 | 115.9 | 43.65 | 125 | M30 |
| 3 7/16 | UELF318-307D1W3 | 11 1/32 | 8 1/2 | 1 47/64 | 1 3/16 | 3 | 1 3/8 | 4 37/64 | 4.563 | 1.719 | 4 59/64 | 1 1/8 |
| 3 1/2 | UELF318-308D1W3 | | | | | | | | | | | |

Remarks: 1) These numbers indicate relubricatable type. If maintenance free type is needed, please order without suffix "D1".
2) Inner race face does not protrude from the housing face except UELF305 and UELF316.

Note: Please refer to page 36 for size of grease fitting.

| Bearing number | Housing [1)] number | Mass of unit kg | lb |
|---|---|---|---|
| UEL312D1W3 | F312D1 | 6.7 | |
| UEL312-204D1W3 | F312D1 | | |
| UEL312-205D1W3 | F312D1 | 15 | |
| UEL312-206D1W3 | F312D1 | | |
| UEL312-207D1W3 | F312D1 | | |
| UEL313D1W3 | F313D1 | 8.4 | |
| UEL313-208D1W3 | F313D1 | 19 | |
| UEL313-209D1W3 | F313D1 | | |
| UEL314D1W3 | F314D1 | 10 | |
| UEL314-210D1W3 | F314D1 | | |
| UEL314-211D1W3 | F314D1 | 22 | |
| UEL314-212D1W3 | F314D1 | | |
| UEL315D1W3 | F315D1 | 12 | |
| UEL315-213D1W3 | F315D1 | | |
| UEL315-214D1W3 | F315D1 | 26 | |
| UEL315-215D1W3 | F315D1 | | |
| UEL315-300D1W3 | F315D1 | | |
| UEL316D1W3 | F316D1 | 15 | |
| UEL316-301D1W3 | F316D1 | | |
| UEL316-302D1W3 | F316D1 | 33 | |
| UEL316-303D1W3 | F316D1 | | |
| UEL317D1W3 | F317D1 | 16 | |
| UEL317-304D1W3 | F317D1 | | |
| UEL317-305D1W3 | F317D1 | 35 | |
| UEL317-307D1W3 | F317D1 | | |
| UEL318D1W3 | F318D1 | 20 | |
| UEL318-308D1W3 | F318D1 | 44 | |
| UEL318-308D1W3 | F318D1 | | |

## Square flanged units cast housing
## Eccentric locking collar type

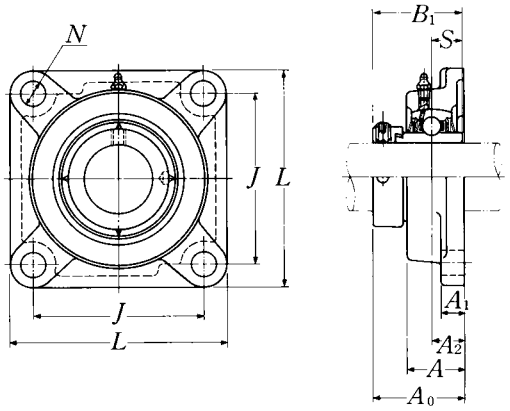


| Shaft dia. mm / inch | Unit number [1] | Nominal dimensions mm / inch L | J | A2 | A1 | A | N | A0 | B1 | S | Bolt size mm / inch | Bearing number |
|---|---|---|---|---|---|---|---|---|---|---|---|---|
| **95** | **UELF319D1W3** | 290 | 228 | 59 | 30 | 94 | 35 | 142.4 | 122.3 | 38.9 | M30 | UEL319D1W3 |
| **3 5/8** | **UELF319-310D1W3** | | | | | | | | | | | UEL319-310D1W3 |
| **3 11/16** | **UELF319-311D1W3** | 11 13/32 | 8 31/32 | 2 21/64 | 1 3/16 | 3 11/16 | 1 3/8 | 5 39/64 | 4.815 | 1.531 | 1 1/8 | UEL319-311D1W3 |
| **3 3/4** | **UELF319-312D1W3** | | | | | | | | | | | UEL319-312D1W3 |
| **100** | **UELF320D1W3** | 310 | 242 | 59 | 32 | 94 | 38 | 137.6 | 128.6 | 50 | M33 | UEL320D1W3 |
| **3 13/16** | **UELF320-313D1W3** | | | | | | | | | | | UEL320-313D1W3 |
| **3 7/8** | **UELF320-314D1W3** | 12 7/32 | 9 17/32 | 2 21/64 | 1 1/4 | 3 11/16 | 1 1/2 | 5 27/64 | 5.063 | 1.969 | 1 1/4 | UEL320-314D1W3 |
| **3 15/16** | **UELF320-315D1W3** | | | | | | | | | | | UEL320-315D1W3 |
| **4** | **UELF320-400D1W3** | | | | | | | | | | | UEL320-400D1W3 |
| **105** | **UELF321D1W3** | 310 | 242 | 59 | 32 | 94 | 38 | 150.3 | 139.7 | 48.4 | M33 | UEL321D1W3 |
| **110** | **UELF322D1W3** | 340 | 266 | 60 | 35 | 96 | 41 | 152.1 | 141.3 | 49.2 | M36 | UEL322D1W3 |

Remarks: 1) These numbers indicate relubricatable type. If maintenance free type is needed, please order without suffix "D1".
Note: Please refer to page 36 for size of grease fitting.

| Housing [1)] number | Mass of unit kg | lb |
|---|---|---|
| F319D1 | 24 | |
| F319D1 | | |
| F319D1 | 53 | |
| F319D1 | | |
| F320D1 | 29 | |
| F320D1 | | |
| F320D1 | 64 | |
| F320D1 | | |
| F320D1 | | |
| F321D1 | 28 | |
| F322D1 | 37 | |

## Square flanged units cast housing w/spigot joint
## Eccentric locking collar type

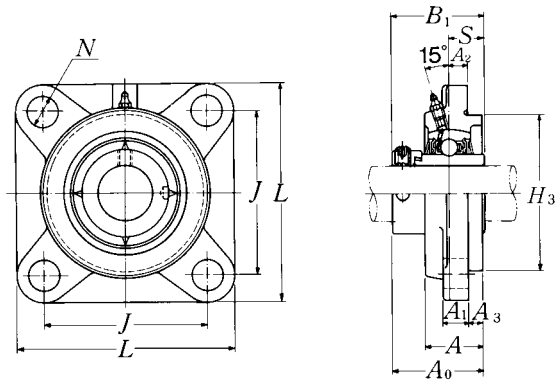


| Shaft dia. mm / inch | Unit number [1] | Nominal dimensions mm / inch L | J | A2 | N | A3 | A1 | A | H3 | A0 | B1 | S | Bolt size mm / inch |
|---|---|---|---|---|---|---|---|---|---|---|---|---|---|
| 25 | UELFS305D1W3 | 110 | 80 | 9 | 16 | 7 | 13 | 29 | 80 | 46.1 | 46.8 | 16.7 | M14 |
| 13/16 | UELFS305-013D1W3 | | | | | | | | | | | | |
| 7/8 | UELFS305-014D1W3 | 4 11/32 | 3 5/32 | 23/64 | 5/8 | 9/32 | 1/2 | 1 9/64 | 3.1496 | 1 13/16 | 1.843 | 0.657 | 1/2 |
| 15/16 | UELFS305-015D1W3 | | | | | | | | | | | | |
| 1 | UELFS305-100D1W3 | | | | | | | | | | | | |
| 30 | UELFS306D1W3 | 125 | 95 | 10 | 16 | 8 | 15 | 32 | 90 | 50.5 | 50 | 17.5 | M14 |
| 1 1/16 | UELFS306-101D1W3 | | | | | | | | | | | | |
| 1 1/8 | UELFS306-102D1W3 | 4 29/32 | 3 47/64 | 25/64 | 5/8 | 5/16 | 19/32 | 1 17/64 | 3.5433 | 1 63/64 | 1.969 | 0.689 | 1/2 |
| 1 3/16 | UELFS306-103D1W3 | | | | | | | | | | | | |
| 35 | UELFS307D1W3 | 135 | 100 | 11 | 19 | 9 | 16 | 36 | 100 | 53.3 | 51.6 | 18.3 | M16 |
| 1 1/4 | UELFS307-104D1W3 | | | | | | | | | | | | |
| 1 5/16 | UELFS307-105D1W3 | 5 5/16 | 3 15/16 | 7/16 | 3/4 | 23/64 | 5/8 | 1 13/32 | 3.9370 | 2 3/32 | 2.031 | 0.720 | 5/8 |
| 1 3/8 | UELFS307-106D1W3 | | | | | | | | | | | | |
| 1 7/16 | UELFS307-107D1W3 | | | | | | | | | | | | |
| 40 | UELFS308D1W3 | 150 | 112 | 13 | 19 | 10 | 17 | 40 | 115 | 60.3 | 57.1 | 19.8 | M16 |
| 1 1/2 | UELFS308-108D1W3 | 5 29/32 | 4 13/32 | 33/64 | 3/4 | 25/64 | 21/32 | 1 9/16 | 4.5276 | 2 3/8 | 2.248 | 0.780 | 5/8 |
| 1 9/16 | UELFS308-109D1W3 | | | | | | | | | | | | |
| 45 | UELFS309D1W3 | 160 | 125 | 14 | 19 | 11 | 18 | 44 | 125 | 63.9 | 58.7 | 19.8 | M16 |
| 1 5/8 | UELFS309-110D1W3 | | | | | | | | | | | | |
| 1 11/16 | UELFS309-111D1W3 | 6 5/16 | 4 59/64 | 35/64 | 3/4 | 7/16 | 23/32 | 1 47/64 | 4.9213 | 2 33/64 | 2.311 | 0.780 | 5/8 |
| 1 3/4 | UELFS309-112D1W3 | | | | | | | | | | | | |
| 50 | UELFS310D1W3 | 175 | 132 | 16 | 23 | 12 | 19 | 48 | 140 | 70 | 66.6 | 24.6 | M20 |
| 1 13/16 | UELFS310-113D1W3 | | | | | | | | | | | | |
| 1 7/8 | UELFS310-114D1W3 | 6 7/8 | 5 13/64 | 5/8 | 29/32 | 15/32 | 3/4 | 1 57/64 | 5.5118 | 2 3/4 | 2.622 | 0.969 | 3/4 |
| 1 15/16 | UELFS310-115D1W3 | | | | | | | | | | | | |
| 55 | UELFS311D1W3 | 185 | 140 | 17 | 23 | 13 | 20 | 52 | 150 | 75.2 | 73 | 27.8 | M20 |
| 2 | UELFS311-200D1W3 | | | | | | | | | | | | |
| 2 1/16 | UELFS311-201D1W3 | 7 9/32 | 5 33/64 | 43/64 | 29/32 | 33/64 | 25/32 | 2 3/64 | 5.9055 | 2 61/64 | 2.874 | 1.094 | 3/4 |
| 2 1/8 | UELFS311-202D1W3 | | | | | | | | | | | | |
| 2 3/16 | UELFS311-203D1W3 | | | | | | | | | | | | |

Remarks: 1) These numbers indicate relubricatable type. If maintenance free type is needed, please order without suffix "D1".
Note: Please refer to page 36 for size of grease fitting.

| Bearing number | Housing [1] number | Mass of unit kg | lb |
|---|---|---|---|
| UEL305D1W3 | FS305D1 | 1.3 | |
| UEL305-013D1W3 | FS305D1 | | |
| UEL305-014D1W3 | FS305D1 | 2.9 | |
| UEL305-015D1W3 | FS305D1 | | |
| UEL305-100D1W3 | FS305D1 | | |
| UEL306D1W3 | FS306D1 | 1.9 | |
| UEL306-101D1W3 | FS306D1 | | |
| UEL306-102D1W3 | FS306D1 | 4.2 | |
| UEL306-103D1W3 | FS306D1 | | |
| UEL307D1W3 | FS307D1 | 2.3 | |
| UEL307-104D1W3 | FS307D1 | | |
| UEL307-105D1W3 | FS307D1 | 5.1 | |
| UEL307-106D1W3 | FS307D1 | | |
| UEL307-107D1W3 | FS307D1 | | |
| UEL308D1W3 | FS308D1 | 3.3 | |
| UEL308-108D1W3 | FS308D1 | 7.3 | |
| UEL308-109D1W3 | FS308D1 | | |
| UEL309D1W3 | FS309D1 | 4.0 | |
| UEL309-110D1W3 | FS309D1 | | |
| UEL309-111D1W3 | FS309D1 | 8.8 | |
| UEL309-112D1W3 | FS309D1 | | |
| UEL310D1W3 | FS310D1 | 5.2 | |
| UEL310-113D1W3 | FS310D1 | | |
| UEL310-114D1W3 | FS310D1 | 11 | |
| UEL310-115D1W3 | FS310D1 | | |
| UEL311D1W3 | FS311D1 | 6.2 | |
| UEL311-200D1W3 | FS311D1 | | |
| UEL311-201D1W3 | FS311D1 | 14 | |
| UEL311-202D1W3 | FS311D1 | | |
| UEL311-203D1W3 | FS311D1 | | |

## Square flanged units cast housing w/spigot joint
## Eccentric locking collar type

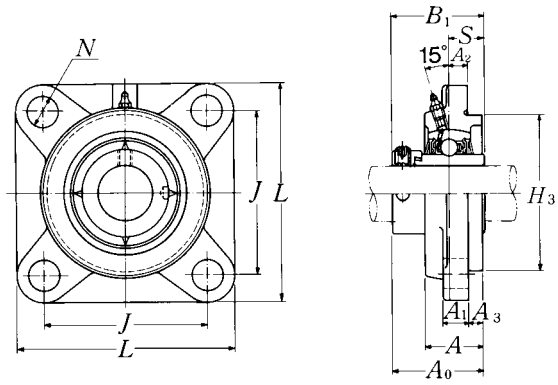


| Shaft dia. mm / inch | Unit number [1] | Nominal dimensions mm / inch L | J | A2 | N | A3 | A1 | A | H3 | A0 | B1 | S | Bolt size mm / inch |
|---|---|---|---|---|---|---|---|---|---|---|---|---|---|
| 60 | UELFS312D1W3 | 195 | 150 | 19 | 23 | 14 | 22 | 56 | 160 | 81.5 | 79.4 | 30.95 | M20 |
| 2 1/4 | UELFS312-204D1W3 | | | | | | | | | | | | |
| 2 5/16 | UELFS312-205D1W3 | 7 11/16 | 5 29/32 | 3/4 | 29/32 | 35/64 | 7/8 | 2 13/16 | 6.2992 | 3 13/64 | 3.126 | 1.219 | 3/4 |
| 2 3/8 | UELFS312-206D1W3 | | | | | | | | | | | | |
| 2 7/16 | UELFS312-207D1W3 | | | | | | | | | | | | |
| 65 | UELFS313D1W3 | 208 | 166 | 15 | 23 | 18 | 22 | 58 | 175 | 86.2 | 85.7 | 32.55 | M20 |
| 2 1/2 | UELFS313-208D1W3 | 8 3/16 | 6 17/32 | 19/32 | 29/32 | 45/64 | 7/8 | 2 9/32 | 6.8898 | 3 25/64 | 3.374 | 1.281 | 3/4 |
| 2 9/16 | UELFS313-209D1W3 | | | | | | | | | | | | |
| 70 | UELFS314D1W3 | 226 | 178 | 18 | 25 | 18 | 25 | 61 | 185 | 94.0 | 92.1 | 34.15 | M22 |
| 2 5/8 | UELFS314-210D1W3 | | | | | | | | | | | | |
| 2 11/16 | UELFS314-211D1W3 | 8 29/32 | 7 1/64 | 45/64 | 63/64 | 45/64 | 31/32 | 2 13/32 | 7.2835 | 3 45/64 | 3.626 | 1.344 | 7/8 |
| 2 3/4 | UELFS314-212D1W3 | | | | | | | | | | | | |
| 75 | UELFS315D1W3 | 236 | 184 | 21 | 25 | 18 | 25 | 66 | 200 | 101.7 | 100 | 37.3 | M22 |
| 2 13/16 | UELFS315-213D1W3 | | | | | | | | | | | | |
| 2 7/8 | UELFS315-214D1W3 | 9 9/32 | 7 1/4 | 53/64 | 63/64 | 45/64 | 31/32 | 2 19/32 | 7.8740 | 4 | 3.937 | 1.469 | 7/8 |
| 2 15/16 | UELFS315-215D1W3 | | | | | | | | | | | | |
| 3 | UELFS315-300D1W3 | | | | | | | | | | | | |
| 80 | UELFS316D1W3 | 250 | 196 | 18 | 31 | 20 | 27 | 68 | 210 | 103.9 | 106.4 | 40.5 | M27 |
| 3 1/16 | UELFS316-301D1W3 | | | | | | | | | | | | |
| 3 1/8 | UELFS316-302D1W3 | 9 27/32 | 7 23/32 | 45/64 | 1 7/32 | 25/32 | 1 1/16 | 2 43/64 | 8.2677 | 4 3/32 | 4.189 | 1.594 | 1 |
| 3 3/16 | UELFS316-303D1W3 | | | | | | | | | | | | |
| 85 | UELFS317D1W3 | 260 | 204 | 24 | 31 | 20 | 27 | 74 | 220 | 111.5 | 109.5 | 42.05 | M27 |
| 3 1/4 | UELFS317-304D1W3 | | | | | | | | | | | | |
| 3 5/16 | UELFS317-305D1W3 | 10 1/4 | 8 1/32 | 15/16 | 1 7/32 | 25/32 | 1 1/16 | 2 29/32 | 8.6614 | 4 25/64 | 4.311 | 1.656 | 1 |
| 3 7/16 | UELFS317-307D1W3 | | | | | | | | | | | | |
| 90 | UELFS318D1W3 | 280 | 216 | 24 | 35 | 20 | 30 | 76 | 240 | 116.3 | 115.9 | 43.65 | M30 |
| 3 7/16 | UELFS318-307D1W3 | 11 1/32 | 8 1/2 | 15/16 | 1 3/8 | 25/32 | 1 3/16 | 2 63/64 | 9.4488 | 4 37/64 | 4.563 | 1.719 | 1 1/8 |
| 3 1/2 | UELFS318-308D1W3 | | | | | | | | | | | | |

Remarks: 1) These numbers indicate relubricatable type. If maintenance free type is needed, please order without suffix "D1".
Note: Please refer to page 36 for size of grease fitting.

| Bearing number | Housing [1] number | Mass of unit kg | lb |
|---|---|---|---|
| UEL312D1W3 | FS312D1 | 7.4 | |
| UEL312-204D1W3 | FS312D1 | | |
| UEL312-205D1W3 | FS312D1 | 16 | |
| UEL312-206D1W3 | FS312D1 | | |
| UEL312-207D1W3 | FS312D1 | | |
| UEL313D1W3 | FS313D1 | 9.0 | |
| UEL313-208D1W3 | FS313D1 | 20 | |
| UEL313-209D1W3 | FS313D1 | | |
| UEL314D1W3 | FS314D1 | 11 | |
| UEL314-210D1W3 | FS314D1 | | |
| UEL314-211D1W3 | FS314D1 | 24 | |
| UEL314-212D1W3 | FS314D1 | | |
| UEL315D1W3 | FS315D1 | 13 | |
| UEL315-213D1W3 | FS315D1 | | |
| UEL315-214D1W3 | FS315D1 | 29 | |
| UEL315-215D1W3 | FS315D1 | | |
| UEL315-300D1W3 | FS315D1 | | |
| UEL316D1W3 | FS316D1 | 16 | |
| UEL316-301D1W3 | FS316D1 | | |
| UEL316-302D1W3 | FS316D1 | 35 | |
| UEL316-303D1W3 | FS316D1 | | |
| UEL317D1W3 | FS317D1 | 18 | |
| UEL317-304D1W3 | FS317D1 | | |
| UEL317-305D1W3 | FS317D1 | 40 | |
| UEL317-307D1W3 | FS317D1 | | |
| UEL318D1W3 | FS318D1 | 22 | |
| UEL318-307D1W3 | FS318D1 | 49 | |
| UEL318-308D1W3 | FS318D1 | | |

## Square flanged units cast housing w/spigot joint
## Eccentric locking collar type

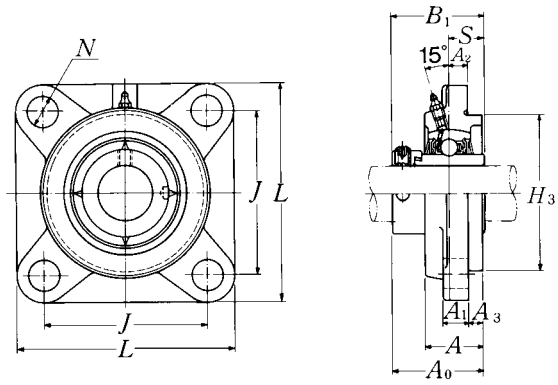


| Shaft dia. mm / inch | Unit number [1] | Nominal dimensions mm / inch L | J | A2 | N | A3 | A1 | A | H3 | A0 | B1 | S | Bolt size mm / inch |
|---|---|---|---|---|---|---|---|---|---|---|---|---|---|
| **95** | **UELFS319D1W3** | 290 | 228 | 39 | 35 | 20 | 30 | 94 | 250 | 142.4 | 122.3 | 38.9 | M30 |
| **3 5/8** | **UELFS319-310D1W3** | | | | | | | | | | | | |
| **3 11/16** | **UELFS319-311D1W3** | 11 13/32 | 8 31/32 | 1 17/32 | 1 3/8 | 25/32 | 1 3/16 | 3 45/64 | 9.8425 | 5 39/64 | 4.815 | 1.531 | 1 1/8 |
| **3 3/4** | **UELFS319-312D1W3** | | | | | | | | | | | | |
| **100** | **UELFS320D1W3** | 310 | 242 | 39 | 38 | 20 | 32 | 94 | 260 | 137.6 | 128.6 | 50 | M33 |
| **3 13/16** | **UELFS320-313D1W3** | | | | | | | | | | | | |
| **3 7/8** | **UELFS320-314D1W3** | 12 7/32 | 9 17/32 | 1 17/32 | 1 1/2 | 25/32 | 1 1/4 | 3 45/64 | 10.2362 | 5 27/64 | 5.063 | 1.969 | 1 1/4 |
| **3 15/16** | **UELFS320-315D1W3** | | | | | | | | | | | | |
| **4** | **UELFS320-400D1W3** | | | | | | | | | | | | |
| **105** | **UELFS321D1W3** | 310 | 242 | 39 | 38 | 20 | 32 | 94 | 260 | 150.3 | 139.7 | 48.4 | M33 |
| **110** | **UELFS322D1W3** | 340 | 266 | 35 | 41 | 25 | 35 | 96 | 300 | 152.1 | 141.3 | 49.2 | M36 |

Remarks: 1) These numbers indicate relubricatable type. If maintenance free type is needed, please order without suffix "D1".
Note: Please refer to page 36 for size of grease fitting.

| Bearing number | Housing [1)] number | Mass of unit kg lb |
|---|---|---|
| UEL319D1W3 | FS319D1 | 26 |
| UEL319-310D1W3 | FS319D1 | |
| UEL319-311D1W3 | FS319D1 | 57 |
| UEL319-312D1W3 | FS319D1 | |
| UEL320D1W3 | FS320D1 | 31 |
| UEL320-313D1W3 | FS320D1 | |
| UEL320-314D1W3 | FS320D1 | 68 |
| UEL320-315D1W3 | FS320D1 | |
| UEL320-400D1W3 | FS320D1 | |
| UEL321D1W3 | FS321D1 | 31 |
| UEL322D1W3 | FS322D1 | 41 |

## Round flanged units cast housing w/spigot joint
## Eccentric locking collar type

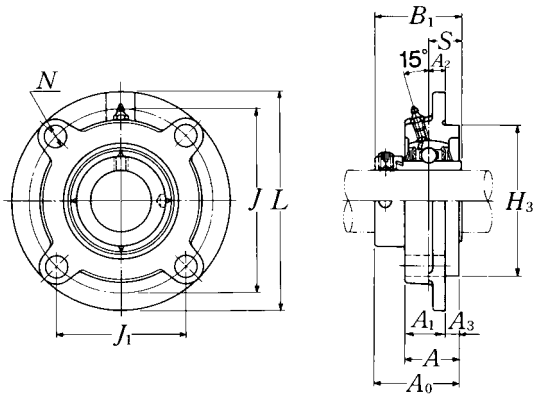


| Shaft dia. mm / inch | Unit number [1] | Nominal dimensions mm / inch L | J | (J1) | A2 | N | A3 | A1 | A | H3 | A0 | B1 | S | Bolt size mm / inch |
|---|---|---|---|---|---|---|---|---|---|---|---|---|---|---|
| 20 | UELFC204D1W3 | 100 | 78 | 55.2 | 10 | 12 | 5 | 20.5 | 25.5 | 62 | 41.6 | 43.7 | 17.1 | M10 |
| 3/4 | UELFC204-012D1W3 | 3 15/16 | 3 5/64 | 2 11/64 | 25/64 | 15/32 | 13/64 | 13/16 | 1 | 2.4409 | 1 41/64 | 1.720 | 0.673 | 3/8 |
| 25 | UELFC205D1W3 | 115 | 90 | 63.6 | 10 | 12 | 6 | 21 | 27 | 70 | 42.9 | 44.4 | 17.45 | M10 |
| 13/16 | UELFC205-013D1W3 | | | | | | | | | | | | | |
| 7/8 | UELFC205-014D1W3 | 4 17/32 | 3 35/64 | 2 1/2 | 25/64 | 15/32 | 15/64 | 13/16 | 1 1/16 | 2.7559 | 1 11/16 | 1.748 | 0.687 | 3/8 |
| 15/16 | UELFC205-015D1W3 | | | | | | | | | | | | | |
| 1 | UELFC205-100D1W3 | | | | | | | | | | | | | |
| 30 | UELFC206D1W3 | 125 | 100 | 70.7 | 10 | 12 | 8 | 23 | 31 | 80 | 48.1 | 48.4 | 18.25 | M10 |
| 1 1/16 | UELFC206-110D1W3 | | | | | | | | | | | | | |
| 1 1/8 | UELFC206-102D1W3 | 4 29/32 | 3 15/16 | 2 25/32 | 25/64 | 15/32 | 5/16 | 29/32 | 1 7/32 | 3.1496 | 1 57/64 | 1.906 | 0.719 | 3/8 |
| 1 3/16 | UELFC206-103D1W3 | | | | | | | | | | | | | |
| 1 1/4 | UELFC206-104D1W3 | | | | | | | | | | | | | |
| 35 | UELFC207D1W3 | 135 | 110 | 77.8 | 11 | 14 | 8 | 26 | 34 | 90 | 51.3 | 51.1 | 18.8 | M12 |
| 1 1/4 | UELFC207-104D1W3 | | | | | | | | | | | | | |
| 1 5/16 | UELFC207-105D1W3 | 5 5/16 | 4 21/64 | 3 1/16 | 7/16 | 35/64 | 5/16 | 1 1/32 | 1 11/32 | 3.5433 | 2 1/64 | 2.012 | 0.740 | 7/16 |
| 1 3/8 | UELFC207-106D1W3 | | | | | | | | | | | | | |
| 1 7/16 | UELFC207-107D1W3 | | | | | | | | | | | | | |
| 40 | UELFC208D1W3 | 145 | 120 | 84.9 | 11 | 14 | 10 | 26 | 36 | 100 | 55.9 | 56.3 | 21.4 | M12 |
| 1 1/2 | UELFC208-108D1W3 | 5 23/32 | 4 23/32 | 3 11/32 | 7/16 | 35/64 | 25/64 | 1 1/32 | 1 27/64 | 3.9370 | 2 13/64 | 2.217 | 0.843 | 7/16 |
| 1 9/16 | UELFC208-109D1W3 | | | | | | | | | | | | | |
| 45 | UELFC209D1W3 | 160 | 132 | 93.3 | 10 | 16 | 12 | 26 | 38 | 105 | 56.9 | 56.3 | 21.4 | M14 |
| 1 5/8 | UELFC209-110D1W3 | | | | | | | | | | | | | |
| 1 11/16 | UELFC209-111D1W3 | 6 5/16 | 5 13/64 | 3 43/64 | 25/64 | 5/8 | 15/32 | 1 1/32 | 1 1/2 | 4.1339 | 2 15/64 | 2.217 | 0.843 | 1/2 |
| 1 3/4 | UELFC209-112D1W3 | | | | | | | | | | | | | |
| 50 | UELFC210D1W3 | 165 | 138 | 97.6 | 10 | 16 | 12 | 28 | 40 | 110 | 60.1 | 62.7 | 24.6 | M14 |
| 1 13/16 | UELFC210-113D1W3 | | | | | | | | | | | | | |
| 1 7/8 | UELFC210-114D1W3 | 6 1/2 | 5 7/16 | 3 27/32 | 25/64 | 5/8 | 15/32 | 1 3/32 | 1 37/64 | 4.3307 | 2 23/64 | 2.469 | 0.969 | 1/2 |
| 1 15/16 | UELFC210-115D1W3 | | | | | | | | | | | | | |
| 2 | UELFC210-200D1W3 | | | | | | | | | | | | | |

Remarks: 1) These numbers indicate relubricatable type. If maintenance free type is needed, please order without suffix "D1".
Note: Please refer to page 36 for size of grease fitting.

| Bearing number | Housing [1] number | Mass of unit kg | lb |
|---|---|---|---|
| UEL204D1W3 | FC204D1 | 0.8 | |
| UEL204-012D1W3 | FC204D1 | 1.8 | |
| UEL205D1W3 | FC205D1 | 1.1 | |
| UEL205-013D1W3 | FC205D1 | 2.4 | |
| UEL205-014D1W3 | FC205D1 | | |
| UEL205-015D1W3 | FC205D1 | | |
| UEL205-100D1W3 | FC205D1 | | |
| UEL206D1W3 | FC206D1 | 1.4 | |
| UEL206-101D1W3 | FC206D1 | 3.1 | |
| UEL206-102D1W3 | FC206D1 | | |
| UEL206-103D1W3 | FC206D1 | | |
| UEL206-104D1W3 | FC206D1 | | |
| UEL207D1W3 | FC207D1 | 1.8 | |
| UEL207-104D1W3 | FC207D1 | 4.0 | |
| UEL207-105D1W3 | FC207D1 | | |
| UEL207-106D1W3 | FC207D1 | | |
| UEL207-107D1W3 | FC207D1 | | |
| UEL208D1W3 | FC208D1 | 2.1 | |
| UEL208-108D1W3 | FC208D1 | 4.6 | |
| UEL208-109D1W3 | FC208D1 | | |
| UEL209D1W3 | FC209D1 | 2.8 | |
| UEL209-110D1W3 | FC209D1 | 6.2 | |
| UEL209-111D1W3 | FC209D1 | | |
| UEL209-112D1W3 | FC209D1 | | |
| UEL210D1W3 | FC210D1 | 3.1 | |
| UEL210-113D1W3 | FC210D1 | 6.8 | |
| UEL210-114D1W3 | FC210D1 | | |
| UEL210-115D1W3 | FC210D1 | | |
| UEL210-200D1W3 | FC210D1 | | |

## Round flanged units cast housing w/spigot joint
## Eccentric locking collar type

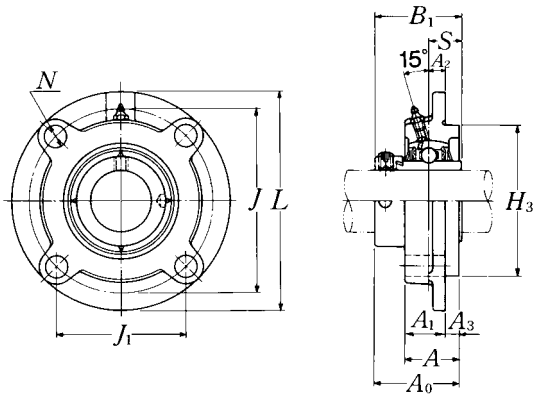


| Shaft dia. mm / inch | Unit number [1] | Nominal dimensions mm / inch L | J | (J1) | A2 | N | A3 | A1 | A | H3 | A0 | B1 | S | Bolt size mm / inch |
|---|---|---|---|---|---|---|---|---|---|---|---|---|---|---|
| 55 | UELFC211D1W3 | 185 | 150 | 106.1 | 13 | 19 | 12 | 31 | 43 | 125 | 68.6 | 71.4 | 27.75 | M16 |
| 2 | UELFC211-200D1W3 | | | | | | | | | | | | | |
| 2 1/16 | UELFC211-201D1W3 | 7 9/32 | 5 29/32 | 4 11/64 | 33/64 | 3/4 | 15/32 | 1 7/32 | 1 11/16 | 4.9213 | 2 45/64 | 2.811 | 1.093 | 5/8 |
| 2 1/8 | UELFC211-202D1W3 | | | | | | | | | | | | | |
| 2 3/16 | UELFC211-203D1W3 | | | | | | | | | | | | | |
| 60 | UELFC212D1W3 | 195 | 160 | 113.1 | 17 | 19 | 12 | 36 | 48 | 135 | 75.8 | 77.8 | 30.95 | M16 |
| 2 1/4 | UELFC212-204D1W3 | | | | | | | | | | | | | |
| 2 5/16 | UELFC212-205D1W3 | 7 11/16 | 6 19/64 | 4 29/64 | 43/64 | 3/4 | 15/32 | 1 13/32 | 1 57/64 | 5.3150 | 2 63/64 | 3.063 | 1.219 | 5/8 |
| 2 3/8 | UELFC212-206D1W3 | | | | | | | | | | | | | |
| 2 7/16 | UELFC212-207D1W3 | | | | | | | | | | | | | |
| 65 | UELFC213D1W3 | 205 | 170 | 120.2 | 16 | 19 | 14 | 36 | 50 | 145 | 81.6 | 85.7 | 34.15 | M16 |
| 2 1/2 | UELFC213-208D1W3 | 8 1/16 | 6 11/16 | 4 47/64 | 5/8 | 3/4 | 35/64 | 1 13/32 | 1 31/32 | 5.7087 | 3 7/32 | 3.374 | 1.344 | 5/8 |
| 2 9/16 | UELFC213-209D1W3 | | | | | | | | | | | | | |
| 70 | UELFC214D1W3 | 215 | 177 | 125.2 | 17 | 19 | 14 | 40 | 54 | 150 | 82.6 | 85.7 | 34.15 | M16 |
| 2 5/8 | UELFC214-210D1W3 | | | | | | | | | | | | | |
| 2 11/16 | UELFC214-211D1W3 | 8 15/32 | 6 31/32 | 4 59/64 | 43/64 | 3/4 | 35/64 | 1 9/16 | 2 1/8 | 5.9055 | 3 1/4 | 3.374 | 1.344 | 5/8 |
| 2 3/4 | UELFC214-212D1W3 | | | | | | | | | | | | | |
| 75 | UELFC215D1W3 | 220 | 184 | 130.1 | 18 | 19 | 16 | 40 | 56 | 160 | 88.7 | 92 | 37.3 | M16 |
| 2 13/16 | UELFC215-213D1W3 | | | | | | | | | | | | | |
| 2 7/8 | UELFC215-214D1W3 | 8 21/32 | 7 1/4 | 5 1/8 | 45/64 | 3/4 | 5/8 | 1 9/16 | 2 13/64 | 6.2992 | 3 31/64 | 3.622 | 1.469 | 5/8 |
| 2 15/16 | UELFC215-215D1W3 | | | | | | | | | | | | | |
| 3 | UELFC215-300D1W3 | | | | | | | | | | | | | |

Remarks: 1) These numbers indicate relubricatable type. If maintenance free type is needed, please order without suffix "D1".
Note: Please refer to page 36 for size of grease fitting.

| Bearing number | Housing [1)] number | Mass of unit kg | lb |
|---|---|---|---|
| UEL211D1W3 | FC211D1 | 4.3 | |
| UEL211-200D1W3 | FC211D1 | | |
| UEL211-201D1W3 | FC211D1 | 9.5 | |
| UEL211-202D1W3 | FC211D1 | | |
| UEL211-203D1W3 | FC211D1 | | |
| UEL212D1W3 | FC212D1 | 5.2 | |
| UEL212-204D1W3 | FC212D1 | | |
| UEL212-205D1W3 | FC212D1 | 11 | |
| UEL212-206D1W3 | FC212D1 | | |
| UEL212-207D1W3 | FC212D1 | | |
| UEL213D1W3 | FC213D1 | 6.5 | |
| UEL213-208D1W3 | FC213D1 | 14 | |
| UEL213-209D1W3 | FC213D1 | | |
| UEL214D1W3 | FC214D1 | 7.4 | |
| UEL214-210D1W3 | FC214D1 | | |
| UEL214-211D1W3 | FC214D1 | 16 | |
| UEL214-212D1W3 | FC214D1 | | |
| UEL215D1W3 | FC215D1 | 7.8 | |
| UEL215-213D1W3 | FC215D1 | | |
| UEL215-214D1W3 | FC215D1 | 17 | |
| UEL215-215D1W3 | FC215D1 | | |
| UEL215-300D1W3 | FC215D1 | | |

## Rhombus flanged units cast housing
## Eccentric locking collar type

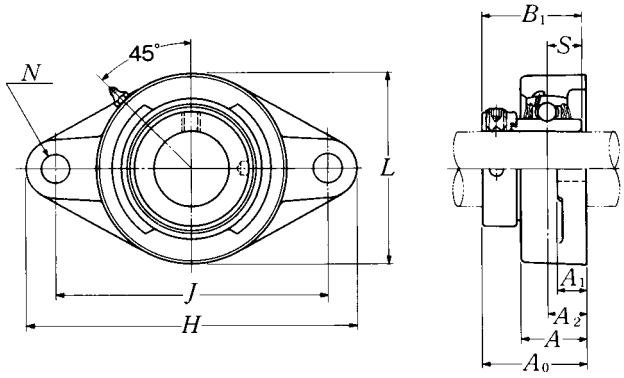


| Shaft dia. mm / inch | Unit number [1] | Nominal dimensions mm / inch H | J | A2 | A1 | A | N | L | A0 | B1 | S | Bolt size mm / inch |
|---|---|---|---|---|---|---|---|---|---|---|---|---|
| 20 | UELFLU204D1W3 | 113 | 90 | 19 | 15 | 29.5 | 11.5 | 61 | 45.6 | 43.7 | 17.1 | M10 |
| 3/4 | UELFLU204-012D1W3 | 4 7/16 | 3 35/64 | 3/4 | 19/32 | 1 5/32 | 29/64 | 2 13/32 | 1 51/64 | 1.720 | 0.673 | 5/16 |
| 25 | UELFLU205D1W3 | 125 | 99 | 19 | 15 | 30 | 11.5 | 70 | 45.9 | 44.4 | 17.45 | M10 |
| 13/16 | UELFLU205-013D1W3 | | | | | | | | | | | |
| 7/8 | UELFLU205-014D1W3 | 4 29/32 | 3 57/64 | 3/4 | 19/32 | 1 3/16 | 29/64 | 2 3/4 | 1 13/16 | 1.748 | 0.687 | 3/8 |
| 15/16 | UELFLU205-015D1W3 | | | | | | | | | | | |
| 1 | UELFLU205-100D1W3 | | | | | | | | | | | |
| 30 | UELFLU206D1W3 | 142 | 116.5 | 20 | 16 | 33 | 11.5 | 83 | 50.1 | 48.4 | 18.25 | M10 |
| 1 1/16 | UELFLU206-101D1W3 | | | | | | | | | | | |
| 1 1/8 | UELFLU206-102D1W3 | 5 19/32 | 4 19/32 | 25/32 | 5/8 | 1 5/16 | 29/64 | 3 9/32 | 1 31/32 | 1.906 | 0.719 | 3/8 |
| 1 3/16 | UELFLU206-103D1W3 | | | | | | | | | | | |
| 1 1/4 | UELFLU206-104D1W3 | | | | | | | | | | | |
| 35 | UELFLU207D1W3 | 156 | 130 | 21 | 17 | 36 | 14 | 96 | 53.3 | 51.1 | 18.8 | M12 |
| 1 1/4 | UELFLU207-104D1W3 | | | | | | | | | | | |
| 1 5/16 | UELFLU207-105D1W3 | 6 5/32 | 5 1/8 | 53/64 | 21/32 | 1 13/32 | 35/64 | 3 25/32 | 2 3/32 | 2.012 | 0.740 | 1/2 |
| 1 3/8 | UELFLU207-106D1W3 | | | | | | | | | | | |
| 1 7/16 | UELFLU207-107D1W3 | | | | | | | | | | | |
| 40 | UELFLU208D1W3 | 172 | 143.5 | 24 | 17 | 39 | 14 | 105 | 58.9 | 56.3 | 21.4 | M12 |
| 1 1/2 | UELFLU208-108D1W3 | 6 25/32 | 5 21/32 | 15/16 | 21/32 | 1 17/32 | 35/64 | 4 1/8 | 2 5/16 | 2.217 | 0.843 | 1/2 |
| 1 9/16 | UELFLU208-109D1W3 | | | | | | | | | | | |
| 45 | UELFLU209D1W3 | 180 | 148.5 | 24 | 18 | 40 | 16 | 111 | 58.9 | 56.3 | 21.4 | M14 |
| 1 5/8 | UELFLU209-110D1W3 | | | | | | | | | | | |
| 1 11/16 | UELFLU209-111D1W3 | 7 3/32 | 5 27/32 | 15/16 | 23/32 | 1 9/16 | 5/8 | 4 3/8 | 2 5/16 | 2.217 | 0.843 | 1/2 |
| 1 3/4 | UELFLU209-112D1W3 | | | | | | | | | | | |
| 50 | UELFLU210D1W3 | 190 | 157 | 28 | 20 | 46 | 18 | 116 | 66.1 | 62.7 | 24.6 | M16 |
| 1 13/16 | UELFLU210-113D1W3 | | | | | | | | | | | |
| 1 7/8 | UELFLU210-114D1W3 | 7 15/32 | 6 3/16 | 1 7/64 | 25/32 | 1 13/16 | 45/64 | 4 9/16 | 2 39/64 | 2.469 | 0.969 | 5/8 |
| 1 15/16 | UELFLU210-115D1W3 | | | | | | | | | | | |
| 2 | UELFLU210-200D1W3 | | | | | | | | | | | |

Remarks: 1) These numbers indicate relubricatable type. If maintenance free type is needed, please order without suffix "D1".
Note: Please refer to page 36 for size of grease fitting.

| Bearing number | Housing [1] number | Mass of unit kg lb |
|---|---|---|
| UEL204D1W3 | FLU204D1 | 0.6 |
| UEL204-012D1W3 | FLU204D1 | 1.3 |
| UEL205D1W3 | FLU205D1 | 0.7 |
| UEL205-013D1W3 | FLU205D1 | 1.5 |
| UEL205-014D1W3 | FLU205D1 | |
| UEL205-015D1W3 | FLU205D1 | |
| UEL205-100D1W3 | FLU205D1 | |
| UEL206D1W3 | FLU206D1 | 1.1 |
| UEL206-101D1W3 | FLU206D1 | 2.4 |
| UEL206-102D1W3 | FLU206D1 | |
| UEL206-103D1W3 | FLU206D1 | |
| UEL206-104D1W3 | FLU206D1 | |
| UEL207D1W3 | FLU207D1 | 1.5 |
| UEL207-104D1W3 | FLU207D1 | 3.3 |
| UEL207-105D1W3 | FLU207D1 | |
| UEL207-106D1W3 | FLU207D1 | |
| UEL207-107D1W3 | FLU207D1 | |
| UEL208D1W3 | FLU208D1 | 1.9 |
| UEL208-108D1W3 | FLU208D1 | 4.2 |
| UEL208-109D1W3 | FLU208D1 | |
| UEL209D1W3 | FLU209D1 | 2.3 |
| UEL209-110D1W3 | FLU209D1 | 5.1 |
| UEL209-111D1W3 | FLU209D1 | |
| UEL209-112D1W3 | FLU209D1 | |
| UEL210D1W3 | FLU210D1 | 2.9 |
| UEL210-113D1W3 | FLU210D1 | 6.4 |
| UEL210-114D1W3 | FLU210D1 | |
| UEL210-115D1W3 | FLU210D1 | |
| UEL210-200D1W3 | FLU210D1 | |

## Rhombus flanged units cast housing
## Eccentric locking collar type

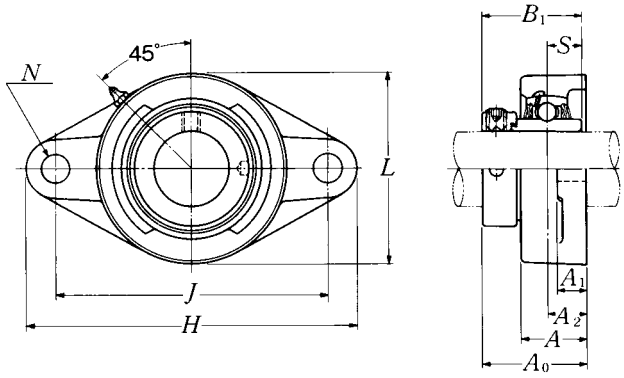


| Shaft dia. mm / inch | Unit number [1] | Nominal dimensions H | J | A2 | A1 | A (mm / inch) | N | L | A0 | B1 | S | Bolt size mm / inch |
|---|---|---|---|---|---|---|---|---|---|---|---|---|
| 55 | UELFLU211D1W3 | 217 | 184 | 31 | 21 | 49 | 18 | 134 | 74.6 | 71.4 | 27.75 | M16 |
| 2 | UELFLU211-200D1W3 | | | | | | | | | | | |
| 2 1/16 | UELFLU211-201D1W3 | 8 17/32 | 7 1/4 | 1 7/32 | 13/16 | 1 15/16 | 45/64 | 5 9/32 | 2 15/16 | 2.811 | 1.093 | 5/8 |
| 2 1/8 | UELFLU211-202D1W3 | | | | | | | | | | | |
| 2 3/16 | UELFLU211-203D1W3 | | | | | | | | | | | |
| 60 | UELFLU212D1W3 | 235 | 202 | 34 | 21 | 53 | 18 | 138 | 80.8 | 77.8 | 30.95 | M16 |
| 2 1/4 | UELFLU212-204D1W3 | | | | | | | | | | | |
| 2 5/16 | UELFLU212-205D1W3 | 9 1/4 | 7 61/64 | 1 11/32 | 13/16 | 2 3/32 | 45/64 | 5 7/16 | 3 3/16 | 3.063 | 1.219 | 5/8 |
| 2 3/8 | UELFLU212-206D1W3 | | | | | | | | | | | |
| 2 7/16 | UELFLU212-207D1W3 | | | | | | | | | | | |
| 65 | UELFLU213D1W3 | 248 | 210 | 38 | 22 | 59 | 20.5 | 152 | 89.55 | 85.7 | 34.15 | M18 |
| 2 1/2 | UELFLU213-208D1W3 | 9 3/4 | 8 17/64 | 1 1/2 | 7/8 | 2 5/16 | 13/16 | 5 31/32 | 3 17/32 | 3.374 | 1.344 | 5/8 |
| 2 9/16 | UELFLU213-209D1W3 | | | | | | | | | | | |
| 70 | UELFLU214D1W3 | 257 | 216 | 38 | 22 | 62 | 20.5 | 159 | 89.55 | 85.7 | 34.15 | M18 |
| 2 5/8 | UELFLU214-210D1W3 | | | | | | | | | | | |
| 2 11/16 | UELFLU214-211D1W3 | 10 1/8 | 8 1/2 | 1 1/2 | 7/8 | 2 7/16 | 13/16 | 6 1/4 | 3 17/32 | 3.374 | 1.344 | 5/8 |
| 2 3/4 | UELFLU214-212D1W3 | | | | | | | | | | | |
| 75 | UELFLU215D1W3 | 266 | 225 | 41 | 22 | 65 | 20.5 | 165 | 95.7 | 92 | 37.3 | M18 |
| 2 13/16 | UELFLU215-213D1W3 | | | | | | | | | | | |
| 2 7/8 | UELFLU215-214D1W3 | 10 15/32 | 8 55/64 | 1 39/64 | 7/8 | 2 9/16 | 13/16 | 6 1/2 | 3 49/64 | 3.622 | 1.469 | 5/8 |
| 2 15/16 | UELFLU215-215D1W3 | | | | | | | | | | | |
| 3 | UELFLU215-300D1W3 | | | | | | | | | | | |

Remarks: 1) These numbers indicate relubricatable type. If maintenance free type is needed, please order without suffix "D1".
Note: Please refer to page 36 for size of grease fitting.

| Bearing number | Housing [1] number | Mass of unit kg lb |
|---|---|---|
| UEL211D1W3 | FLU211D1 | 3.6 |
| UEL211-200D1W3 | FLU211D1 | 7.9 |
| UEL211-201D1W3 | FLU211D1 | |
| UEL211-202D1W3 | FLU211D1 | |
| UEL211-203D1W3 | FLU211D1 | |
| UEL212D1W3 | FLU212D1 | 4.0 |
| UEL212-204D1W3 | FLU212D1 | 8.8 |
| UEL212-205D1W3 | FLU212D1 | |
| UEL212-206D1W3 | FLU212D1 | |
| UEL212-207D1W3 | FLU212D1 | |
| UEL213D1W3 | FLU213D1 | 5.6 |
| UEL213-208D1W3 | FLU213D1 | 12 |
| UEL213-209D1W3 | FLU213D1 | |
| UEL214D1W3 | FLU214D1 | 6.3 |
| UEL214-210D1W3 | FLU214D1 | 14 |
| UEL214-211D1W3 | FLU214D1 | |
| UEL214-212D1W3 | FLU214D1 | |
| UEL215D1W3 | FLU215D1 | 6.8 |
| UEL215-213D1W3 | FLU215D1 | 15 |
| UEL215-214D1W3 | FLU215D1 | |
| UEL215-215D1W3 | FLU215D1 | |
| UEL215-300D1W3 | FLU215D1 | |

## Rhombus flanged units cast housing
## Eccentric locking collar type

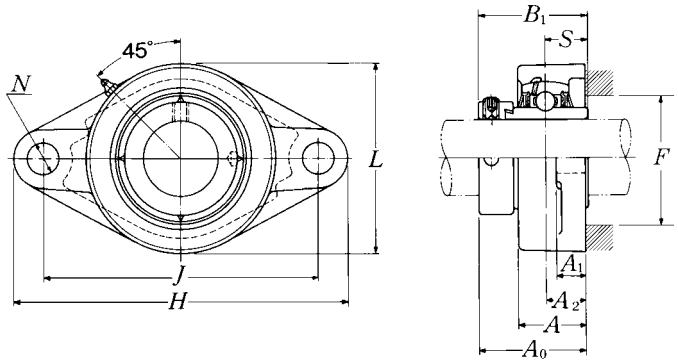


| Shaft dia. mm / inch | Unit number [1] | Nominal dimensions H | J | A2 | A1 | A (mm / inch) | N | L | A0 | B1 | S | F min. | Bolt size mm / inch |
|---|---|---|---|---|---|---|---|---|---|---|---|---|---|
| 20 | UELFL204D1W3 | 113 | 90 | 15 | 11 | 25.5 | 12 | 60 | 41.6 | 43.7 | 17.1 | 34 | M10 |
| 3/4 | UELFL204-012D1W3 | 4 7/16 | 3 35/64 | 19/32 | 7/16 | 1 | 15/32 | 2 3/8 | 1 41/64 | 1.720 | 0.673 | 1 11/32 | 3/8 |
| 25 | UELFL205D1W3 | 130 | 99 | 16 | 13 | 27 | 16 | 68 | 42.9 | 44.4 | 17.45 | 38 | M14 |
| 13/16 | UELFL205-013D1W3 | | | | | | | | | | | | |
| 7/8 | UELFL205-014D1W3 | 5 1/8 | 3 57/64 | 5/8 | 1/2 | 1 1/16 | 5/8 | 2 11/64 | 1 11/16 | 1.748 | 0.687 | 1 1/2 | 1/2 |
| 15/16 | UELFL205-015D1W3 | | | | | | | | | | | | |
| 1 | UELFL205-100D1W3 | | | | | | | | | | | | |
| 30 | UELFL206D1W3 | 148 | 117 | 18 | 13 | 31 | 16 | 80 | 48.1 | 48.4 | 18.25 | 45 | M14 |
| 1 1/6 | UELFL206-101D1W3 | | | | | | | | | | | | |
| 1 1/8 | UELFL206-102D1W3 | 5 13/16 | 4 9/64 | 45/64 | 1/2 | 1 7/32 | 5/8 | 3 5/32 | 1 57/64 | 1.906 | 0.719 | 1 25/32 | 1/2 |
| 1 3/16 | UELFL206-103D1W3 | | | | | | | | | | | | |
| 1 1/4 | UELFL206-104D1W3 | | | | | | | | | | | | |
| 35 | UELFL207D1W3 | 161 | 130 | 19 | 15 | 34 | 16 | 90 | 51.3 | 51.1 | 18.8 | 51 | M14 |
| 1 1/4 | UELFL207-104D1W3 | | | | | | | | | | | | |
| 1 5/16 | UELFL207-105D1W3 | 6 11/32 | 5 1/8 | 3/4 | 19/32 | 1 11/32 | 5/8 | 3 17/32 | 2 1/64 | 2.012 | 0.740 | 2 | 1/2 |
| 1 3/8 | UELFL207-106D1W3 | | | | | | | | | | | | |
| 1 7/16 | UELFL207-107D1W3 | | | | | | | | | | | | |
| 40 | UELFL208D1W3 | 175 | 144 | 21 | 15 | 36 | 16 | 100 | 55.9 | 56.3 | 21.4 | 57 | M14 |
| 1 1/2 | UELFL208-108D1W3 | 6 7/8 | 5 43/64 | 53/64 | 19/32 | 1 13/32 | 5/8 | 3 15/16 | 2 13/16 | 2.217 | 0.843 | 2 1/4 | 1/2 |
| 1 9/16 | UELFL208-109D1W3 | | | | | | | | | | | | |
| 45 | UELFL209D1W3 | 188 | 148 | 22 | 16 | 38 | 19 | 108 | 56.9 | 56.3 | 21.4 | 62 | M16 |
| 1 5/8 | UELFL209-110D1W3 | | | | | | | | | | | | |
| 1 11/16 | UELFL209-111D1W3 | 7 13/32 | 5 53/64 | 55/64 | 5/8 | 1 1/2 | 3/4 | 4 1/4 | 2 15/64 | 2.217 | 0.843 | 2 7/16 | 5/8 |
| 1 3/4 | UELFL209-112D1W3 | | | | | | | | | | | | |
| 50 | UELFL210D1W3 | 197 | 157 | 22 | 16 | 40 | 19 | 115 | 60.1 | 62.7 | 24.6 | 67 | M16 |
| 1 13/16 | UELFL210-113D1W3 | | | | | | | | | | | | |
| 1 7/8 | UELFL210-114D1W3 | 7 3/4 | 6 3/16 | 55/64 | 5/8 | 1 9/16 | 3/4 | 4 17/32 | 2 23/64 | 2.469 | 0.969 | 2 41/64 | 5/8 |
| 1 15/16 | UELFL210-115D1W3 | | | | | | | | | | | | |
| 2 | UELFL210-200D1W3 | | | | | | | | | | | | |

Remarks: 1) These numbers indicate relubricatable type. If maintenance free type is needed, please order without suffix "D1".
Note: Please refer to page 36 for size of grease fitting.

| Bearing number | Housing [1] number | Mass of unit kg | lb |
|---|---|---|---|
| UEL204D1W3 | FL204D1 | 0.5 | |
| UEL204-012D1W3 | FL204D1 | 1.1 | |
| UEL205D1W3 | FL205D1 | 0.7 | |
| UEL205-013D1W3 | FL205D1 | 1.5 | |
| UEL205-014D1W3 | FL205D1 | | |
| UEL205-015D1W3 | FL205D1 | | |
| UEL205-100D1W3 | FL205D1 | | |
| UEL206D1W3 | FL206D1 | 1.0 | |
| UEL206-101D1W3 | FL206D1 | 2.2 | |
| UEL206-102D1W3 | FL206D1 | | |
| UEL206-103D1W3 | FL206D1 | | |
| UEL206-104D1W3 | FL206D1 | | |
| UEL207D1W3 | FL207D1 | 1.3 | |
| UEL207-104D1W3 | FL207D1 | 2.9 | |
| UEL207-105D1W3 | FL207D1 | | |
| UEL207-106D1W3 | FL207D1 | | |
| UEL207-107D1W3 | FL207D1 | | |
| UEL208D1W3 | FL208D1 | 1.6 | |
| UEL208-108D1W3 | FL208D1 | 3.5 | |
| UEL208-109D1W3 | FL208D1 | | |
| UEL209D1W3 | FL209D1 | 2.0 | |
| UEL209-110D1W3 | FL209D1 | 4.4 | |
| UEL209-111D1W3 | FL209D1 | | |
| UEL209-112D1W3 | FL209D1 | | |
| UEL210D1W3 | FL210D1 | 2.2 | |
| UEL210-113D1W3 | FL210D1 | 4.9 | |
| UEL210-114D1W3 | FL210D1 | | |
| UEL210-115D1W3 | FL210D1 | | |
| UEL210-200D1W3 | FL210D1 | | |

## Rhombus flanged units cast housing
## Eccentric locking collar type

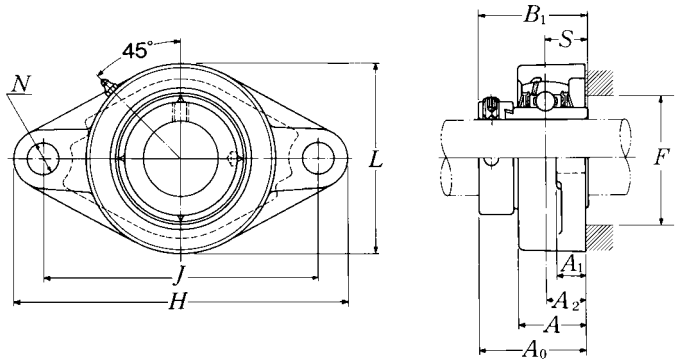


| Shaft dia. mm / inch | Unit number [1] | Nominal dimensions H | J | A2 | A1 | A (mm / inch) | N | L | A0 | B1 | S | F min. | Bolt size mm / inch |
|---|---|---|---|---|---|---|---|---|---|---|---|---|---|
| 55 | UELFL211D1W3 | 224 | 184 | 25 | 18 | 43 | 19 | 130 | 68.6 | 71.4 | 27.75 | 73 | M16 |
| 2 | UELFL211-200D1W3 | | | | | | | | | | | | |
| 2 1/16 | UELFL211-201D1W3 | 8 13/16 | 7 1/4 | 63/64 | 23/32 | 1 11/16 | 3/4 | 5 1/8 | 2 45/64 | 2.811 | 1.093 | 2 7/8 | 5/8 |
| 2 1/8 | UELFL211-202D1W3 | | | | | | | | | | | | |
| 2 3/16 | UELFL211-203D1W3 | | | | | | | | | | | | |
| 60 | UELFL212D1W3 | 250 | 202 | 29 | 18 | 48 | 23 | 140 | 75.8 | 77.8 | 30.95 | 81 | M20 |
| 2 1/4 | UELFL212-204D1W3 | | | | | | | | | | | | |
| 2 5/16 | UELFL212-205D1W3 | 9 27/32 | 7 61/64 | 1 9/64 | 23/32 | 1 7/8 | 29/32 | 5 1/2 | 2 63/64 | 3.063 | 1.219 | 3 3/16 | 3/4 |
| 2 3/8 | UELFL212-206D1W3 | | | | | | | | | | | | |
| 2 7/16 | UELFL212-207D1W3 | | | | | | | | | | | | |
| 65 | UELFL213D1W3 | 258 | 210 | 30 | 22 | 50 | 23 | 155 | 81.55 | 85.7 | 34.15 | 87 | M20 |
| 2 1/2 | UELFL213-208D1W3 | 10 5/32 | 8 17/64 | 1 3/16 | 7/8 | 1 31/32 | 29/32 | 6 3/32 | 3 13/64 | 3.374 | 1.344 | 3 7/16 | 3/4 |
| 2 9/16 | UELFL213-209D1W3 | | | | | | | | | | | | |
| 70 | UELFL214D1W3 | 265 | 216 | 31 | 22 | 54 | 23 | 160 | 82.55 | 85.7 | 34.15 | 91 | M20 |
| 2 5/8 | UELFL214-210D1W3 | | | | | | | | | | | | |
| 2 11/16 | UELFL214-211D1W3 | 10 7/16 | 8 1/2 | 1 7/32 | 7/8 | 2 1/8 | 29/32 | 6 5/16 | 3 1/4 | 3.374 | 1.344 | 3 37/64 | 3/4 |
| 2 3/4 | UELFL214-212D1W3 | | | | | | | | | | | | |
| 75 | UELFL215D1W3 | 275 | 225 | 34 | 22 | 56 | 23 | 165 | 88.7 | 92 | 37.3 | 97 | M20 |
| 2 13/16 | UELFL215-213D1W3 | | | | | | | | | | | | |
| 2 7/8 | UELFL215-214D1W3 | 10 13/16 | 8 55/64 | 1 11/32 | 7/8 | 2 7/32 | 29/32 | 6 1/2 | 3 31/64 | 3.622 | 1.469 | 3 13/16 | 3/4 |
| 2 15/16 | UELFL215-215D1W3 | | | | | | | | | | | | |
| 3 | UELFL215-300D1W3 | | | | | | | | | | | | |

Remarks: 1) These numbers indicate relubricatable type. If maintenance free type is needed, please order without suffix "D1".
Note: Please refer to page 36 for size of grease fitting.

| Bearing number | Housing [1)] number | Mass of unit kg lb |
|---|---|---|
| UEL211D1W3 | FL211D1 | 3.2 |
| UEL211-200D1W3 | FL211D1 | 7.1 |
| UEL211-201D1W3 | FL211D1 | |
| UEL211-202D1W3 | FL211D1 | |
| UEL211-203D1W3 | FL211D1 | |
| UEL212D1W3 | FL212D1 | 4.1 |
| UEL212-204D1W3 | FL212D1 | 9.0 |
| UEL212-205D1W3 | FL212D1 | |
| UEL212-206D1W3 | FL212D1 | |
| UEL212-207D1W3 | FL212D1 | |
| UEL213D1W3 | FL213D1 | 5.5 |
| UEL213-208D1W3 | FL213D1 | 12 |
| UEL213-209D1W3 | FL213D1 | |
| UEL214D1W3 | FL214D1 | 5.8 |
| UEL214-210D1W3 | FL214D1 | 13 |
| UEL214-211D1W3 | FL214D1 | |
| UEL214-212D1W3 | FL214D1 | |
| UEL215D1W3 | FL215D1 | 6.3 |
| UEL215-213D1W3 | FL215D1 | 14 |
| UEL215-214D1W3 | FL215D1 | |
| UEL215-215D1W3 | FL215D1 | |
| UEL215-300D1W3 | FL215D1 | |

## Rhombus flanged units cast housing
## Eccentric locking collar type

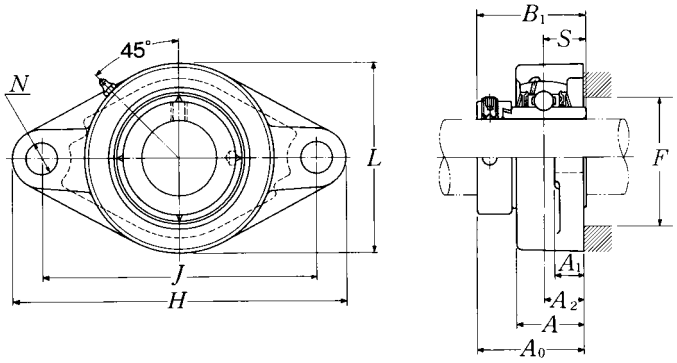


| Shaft dia. mm / inch | Unit number [1] | Nominal dimensions H | J | A2 | A1 | A (mm) | N (inch) | L | A0 | B1 | S | F min. | Bolt size mm / inch |
|---|---|---|---|---|---|---|---|---|---|---|---|---|---|
| 25 | UELFL305D1W3 | 150 | 113 | 16 | 13 | 29 | 19 | 80 | 46.1 | 46.8 | 16.7 | 41 | M16 |
| 13/16 | UELFL305-013D1W3 | | | | | | | | | | | | |
| 7/8 | UELFL305-014D1W3 | 5 29/32 | 4 29/64 | 5/8 | 1/2 | 1 5/32 | 3/4 | 3 5/32 | 1 13/16 | 1.843 | 0.657 | 1 39/64 | 5/8 |
| 15/16 | UELFL305-015D1W3 | | | | | | | | | | | | |
| 1 | UELFL305-100D1W3 | | | | | | | | | | | | |
| 30 | UELFL306D1W3 | 180 | 134 | 18 | 15 | 32 | 23 | 90 | 50.5 | 50 | 17.5 | 49 | M20 |
| 1 1/16 | UELFL306-101D1W3 | | | | | | | | | | | | |
| 1 1/8 | UELFL306-102D1W3 | 7 3/32 | 5 9/32 | 45/64 | 19/32 | 1 1/4 | 29/32 | 3 17/32 | 1 63/64 | 1.969 | 0.689 | 1 15/16 | 3/4 |
| 1 3/16 | UELFL306-103D1W3 | | | | | | | | | | | | |
| 35 | UELFL307D1W3 | 185 | 141 | 20 | 16 | 36 | 23 | 100 | 53.3 | 51.6 | 18.3 | — | M20 |
| 1 1/4 | UELFL307-104D1W3 | | | | | | | | | | | | |
| 1 5/16 | UELFL307-105D1W3 | 7 9/32 | 5 35/64 | 25/32 | 5/8 | 1 13/32 | 29/32 | 3 15/16 | 2 3/32 | 2.031 | 0.720 | — | 3/4 |
| 1 3/8 | UELFL307-106D1W3 | | | | | | | | | | | | |
| 1 7/16 | UELFL307-107D1W3 | | | | | | | | | | | | |
| 40 | UELFL308D1W3 | 200 | 158 | 23 | 17 | 40 | 23 | 112 | 60.3 | 57.1 | 19.8 | — | M20 |
| 1 1/2 | UELFL308-108D1W3 | 7 7/8 | 6 7/32 | 29/32 | 21/32 | 1 9/16 | 29/32 | 4 13/32 | 2 3/8 | 2.248 | 0.780 | — | 3/4 |
| 1 9/16 | UELFL308-109D1W3 | | | | | | | | | | | | |
| 45 | UELFL309D1W3 | 230 | 177 | 25 | 18 | 44 | 25 | 125 | 63.9 | 58.7 | 19.8 | — | M22 |
| 1 5/8 | UELFL309-110D1W3 | | | | | | | | | | | | |
| 1 11/16 | UELFL309-111D1W3 | 9 1/16 | 6 31/32 | 63/64 | 23/32 | 1 23/32 | 63/64 | 4 29/32 | 2 33/64 | 2.311 | 0.780 | — | 7/8 |
| 1 3/4 | UELFL309-112D1W3 | | | | | | | | | | | | |
| 50 | UELFL310D1W3 | 240 | 187 | 28 | 19 | 48 | 25 | 140 | 70 | 66.6 | 24.6 | — | M22 |
| 1 13/16 | UELFL310-113D1W3 | | | | | | | | | | | | |
| 1 7/8 | UELFL310-114D1W3 | 9 7/16 | 7 23/64 | 1 7/64 | 3/4 | 1 7/8 | 63/64 | 5 1/2 | 2 3/4 | 2.622 | 0.969 | — | 7/8 |
| 1 15/16 | UELFL310-115D1W3 | | | | | | | | | | | | |
| 55 | UELFL311D1W3 | 250 | 198 | 30 | 20 | 52 | 25 | 150 | 75.2 | 73 | 27.8 | — | M22 |
| 2 | UELFL311-200D1W3 | | | | | | | | | | | | |
| 2 1/16 | UELFL311-201D1W3 | 9 27/32 | 7 51/64 | 1 3/16 | 25/32 | 2 1/16 | 63/64 | 5 29/32 | 2 61/64 | 2.874 | 1.094 | — | 7/8 |
| 2 1/8 | UELFL311-202D1W3 | | | | | | | | | | | | |
| 2 3/16 | UELFL311-203D1W3 | | | | | | | | | | | | |

Remarks: 1) These numbers indicate relubricatable type. If maintenance free type is needed, please order without suffix "D1".
2) Inner race face does not protrude from the housing face except UELFL305 and UELFL316.
Note: Please refer to page 36 for size of grease fitting.

| Bearing number | Housing [1] number | Mass of unit kg lb |
|---|---|---|
| UEL305D1W3 | FL305D1 | 1.0 |
| UEL305-013D1W3 | FL305D1 | 2.2 |
| UEL305-014D1W3 | FL305D1 | |
| UEL305-015D1W3 | FL305D1 | |
| UEL305-100D1W3 | FL305D1 | |
| UEL306D1W3 | FL306D1 | 1.6 |
| UEL306-101D1W3 | FL306D1 | 3.5 |
| UEL306-102D1W3 | FL306D1 | |
| UEL306-103D1W3 | FL306D1 | |
| UEL307D1W3 | FL307D1 | 1.8 |
| UEL307-104D1W3 | FL307D1 | 4.0 |
| UEL307-105D1W3 | FL307D1 | |
| UEL307-106D1W3 | FL307D1 | |
| UEL307-107D1W3 | FL307D1 | |
| UEL308D1W3 | FL308D1 | 2.3 |
| UEL308-108D1W3 | FL308D1 | 5.1 |
| UEL308-109D1W3 | FL308D1 | |
| UEL309D1W3 | FL309D1 | 3.1 |
| UEL309-110D1W3 | FL309D1 | 6.8 |
| UEL309-111D1W3 | FL309D1 | |
| UEL309-112D1W3 | FL309D1 | |
| UEL310D1W3 | FL310D1 | 4.2 |
| UEL310-113D1W3 | FL310D1 | 9.3 |
| UEL310-114D1W3 | FL310D1 | |
| UEL310-115D1W3 | FL310D1 | |
| UEL311D1W3 | FL311D1 | 4.9 |
| UEL311-200D1W3 | FL311D1 | 11 |
| UEL311-201D1W3 | FL311D1 | |
| UEL311-202D1W3 | FL311D1 | |
| UEL311-203D1W3 | FL311D1 | |

## Rhombus flanged units cast housing
## Eccentric locking collar type

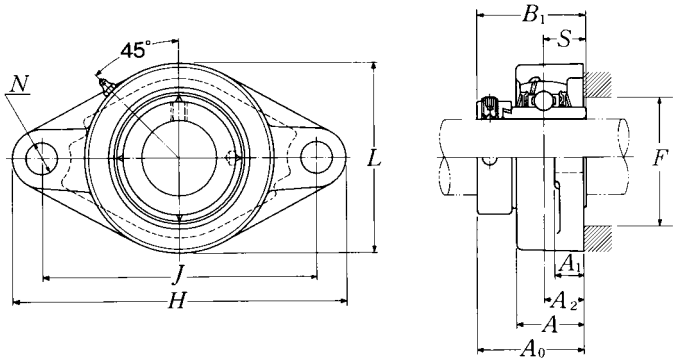


| Shaft dia. mm / inch | Unit number [1] | Nominal dimensions H | J | A2 | A1 | A (mm) | N (inch) | L | A0 | B1 | S | F min. | Bolt size mm / inch |
|---|---|---|---|---|---|---|---|---|---|---|---|---|---|
| 60 | UELFL312D1W3 | 270 | 212 | 33 | 22 | 56 | 31 | 160 | 81.45 | 79.4 | 30.95 | — | M27 |
| 2 1/4 | UELFL312-204D1W3 | | | | | | | | | | | | |
| 2 5/16 | UELFL312-205D1W3 | 10 5/8 | 8 11/32 | 1 19/64 | 7/8 | 2 7/32 | 1 7/32 | 6 5/16 | 3 13/64 | 3.126 | 1.219 | — | 1 |
| 2 3/8 | UELFL312-206D1W3 | | | | | | | | | | | | |
| 2 7/16 | UELFL312-207D1W3 | | | | | | | | | | | | |
| 65 | UELFL313D1W3 | 295 | 240 | 33 | 25 | 58 | 31 | 175 | 86.15 | 85.7 | 32.55 | 93 | M27 |
| 2 1/2 | UELFL313-208D1W3 | 11 5/8 | 9 29/64 | 1 19/64 | 31/32 | 2 9/32 | 1 7/32 | 6 7/8 | 3 25/64 | 3.374 | 1.281 | 3 21/32 | 1 |
| 2 9/16 | UELFL313-209D1W3 | | | | | | | | | | | | |
| 70 | UELFL314D1W3 | 315 | 250 | 36 | 28 | 61 | 35 | 185 | 93.95 | 92.1 | 34.15 | — | M30 |
| 2 5/8 | UELFL314-210D1W3 | | | | | | | | | | | | |
| 2 11/16 | UELFL314-211D1W3 | 12 13/32 | 9 27/32 | 1 27/64 | 1 3/32 | 2 13/32 | 1 3/8 | 7 9/32 | 3 45/64 | 3.626 | 1.344 | — | 1 1/8 |
| 2 3/4 | UELFL314-212D1W3 | | | | | | | | | | | | |
| 75 | UELFL315D1W3 | 320 | 260 | 39 | 30 | 66 | 35 | 195 | 101.7 | 100 | 37.3 | 106 | M30 |
| 2 13/16 | UELFL315-213D1W3 | | | | | | | | | | | | |
| 2 7/8 | UELFL315-214D1W3 | 12 19/32 | 10 15/64 | 1 17/32 | 1 3/16 | 2 19/32 | 1 3/8 | 7 11/16 | 4 | 3.937 | 1.469 | 4 11/64 | 1 1/8 |
| 2 15/16 | UELFL315-215D1W3 | | | | | | | | | | | | |
| 3 | UELFL315-300D1W3 | | | | | | | | | | | | |
| 80 | UELFL316D1W3 | 355 | 285 | 38 | 32 | 68 | 38 | 210 | 103.9 | 106.4 | 40.5 | 112 | M33 |
| 3 1/16 | UELFL316-301D1W3 | | | | | | | | | | | | |
| 3 1/8 | UELFL316-302D1W3 | 13 31/32 | 11 7/32 | 1 1/2 | 1 1/4 | 2 11/16 | 1 1/2 | 8 9/32 | 4 3/32 | 4.189 | 1.594 | 4 13/32 | 1 1/4 |
| 3 3/16 | UELFL316-303D1W3 | | | | | | | | | | | | |
| 85 | UELFL317D1W3 | 370 | 300 | 44 | 32 | 74 | 38 | 220 | 111.45 | 109.5 | 42.05 | 119 | M33 |
| 3 1/4 | UELFL317-304D1W3 | | | | | | | | | | | | |
| 3 5/16 | UELFL317-305D1W3 | 14 9/16 | 11 13/16 | 1 47/64 | 1 1/4 | 2 29/32 | 1 1/2 | 8 21/32 | 4 25/64 | 4.311 | 1.656 | 4 11/16 | 1 1/4 |
| 3 7/16 | UELFL317-307D1W3 | | | | | | | | | | | | |
| 90 | UELFL318D1W3 | 385 | 315 | 44 | 36 | 76 | 38 | 235 | 116.25 | 115.9 | 43.65 | 125 | M33 |
| 3 7/16 | UELFL318-307D1W3 | 15 5/32 | 12 13/32 | 1 47/64 | 1 13/32 | 3 | 1 1/2 | 9 1/4 | 4 37/64 | 4.563 | 1.719 | 4 59/64 | 1 1/4 |
| 3 1/2 | UELFL318-308D1W3 | | | | | | | | | | | | |

Remarks: 1) These numbers indicate relubricatable type. If maintenance free type is needed, please order without suffix "D1".
2) Inner race face does not protrude from the housing face except UELFL305 and UELFL316.

Note: Please refer to page 36 for size of grease fitting.

| Bearing number | Housing [1] number | Mass of unit kg | lb |
|---|---|---|---|
| UEL312D1W3 | FL312D1 | 6.1 | |
| UEL312-204D1W3 | FL312D1 | | |
| UEL312-205D1W3 | FL312D1 | 13 | |
| UEL312-206D1W3 | FL312D1 | | |
| UEL312-207D1W3 | FL312D1 | | |
| UEL313D1W3 | FL313D1 | 8.0 | |
| UEL313-208D1W3 | FL313D1 | 18 | |
| UEL313-209D1W3 | FL313D1 | | |
| UEL314D1W3 | FL314D1 | 9.2 | |
| UEL314-210D1W3 | FL314D1 | | |
| UEL314-211D1W3 | FL314D1 | 20 | |
| UEL314-212D1W3 | FL314D1 | | |
| UEL315D1W3 | FL315D1 | 10 | |
| UEL315-213D1W3 | FL315D1 | | |
| UEL315-214D1W3 | FL315D1 | 22 | |
| UEL315-215D1W3 | FL315D1 | | |
| UEL315-300D1W3 | FL315D1 | | |
| UEL316D1W3 | FL316D1 | 14 | |
| UEL316-301D1W3 | FL316D1 | | |
| UEL316-302D1W3 | FL316D1 | 31 | |
| UEL316-303D1W3 | FL316D1 | | |
| UEL317D1W3 | FL317D1 | 16 | |
| UEL317-304D1W3 | FL317D1 | | |
| UEL317-305D1W3 | FL317D1 | 35 | |
| UEL317-307D1W3 | FL317D1 | | |
| UEL318D1W3 | FL318D1 | 19 | |
| UEL318-307D1W3 | FL318D1 | 42 | |
| UEL318-308D1W3 | FL318D1 | | |

## Rhombus flanged units cast housing
## Eccentric locking collar type

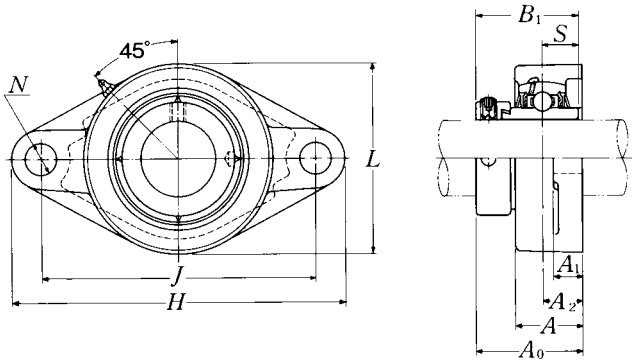


| Shaft dia. mm / inch | Unit number 1) 2) | Nominal dimensions mm / inch H | J | A2 | A1 | A | N | L | A0 | B1 | S | Bolt size mm / inch | Bearing number |
|---|---|---|---|---|---|---|---|---|---|---|---|---|---|
| **95** | **UELFL319D1W3** | 405 | 330 | 59 | 40 | 94 | 41 | 250 | 142.4 | 122.3 | 38.9 | M36 | UEL319D1W3 |
| **3 5/8** | **UELFL319-310D1W3** | | | | | | | | | | | | UEL319-310D1W3 |
| **3 11/16** | **UELFL319-311D1W3** | 15 15/16 | 12 63/64 | 2 21/64 | 1 9/16 | 3 11/16 | 1 39/64 | 9 27/32 | 5 39/64 | 4.815 | 1.531 | 1 3/8 | UEL319-311D1W3 |
| **3 3/4** | **UELFL319-312D1W3** | | | | | | | | | | | | UEL319-312D1W3 |
| **100** | **UELFL320D1W3** | 440 | 360 | 59 | 40 | 94 | 44 | 270 | 137.6 | 128.6 | 50 | M39 | UEL320D1W3 |
| **3 13/16** | **UELFL320-313D1W3** | | | | | | | | | | | | UEL320-313D1W3 |
| **3 7/8** | **UELFL320-314D1W3** | 17 5/16 | 14 11/64 | 2 21/64 | 1 9/16 | 3 11/16 | 1 47/64 | 10 5/8 | 5 27/64 | 5.063 | 1.969 | 1 1/2 | UEL320-314D1W3 |
| **3 15/16** | **UELFL320-315D1W3** | | | | | | | | | | | | UEL320-315D1W3 |
| **4** | **UELFL320-400D1W3** | | | | | | | | | | | | UEL320-400D1W3 |
| **105** | **UELFL321D1W3** | 440 | 360 | 59 | 40 | 94 | 44 | 270 | 150.3 | 139.7 | 48.4 | M39 | UEL321D1W3 |
| **110** | **UELFL322D1W3** | 470 | 390 | 60 | 42 | 96 | 44 | 300 | 152.1 | 141.3 | 49.2 | M39 | UEL322D1W3 |

Remarks: 1) These numbers indicate relubricatable type. If maintenance free type is needed, please order without suffix "D1".
Note: Please refer to page 36 for size of grease fitting.

| Housing [1)] number | Mass of unit kg | lb |
|---|---|---|
| FL319D1 | 24 | |
| FL319D1 | | |
| FL319D1 | 53 | |
| FL319D1 | | |
| FL320D1 | 28 | |
| FL320D1 | | |
| FL320D1 | 62 | |
| FL320D1 | | |
| FL320D1 | | |
| FL321D1 | 30 | |
| FL322D1 | 36 | |

## Light rhombus flanged units cast housing
## Eccentric locking collar type

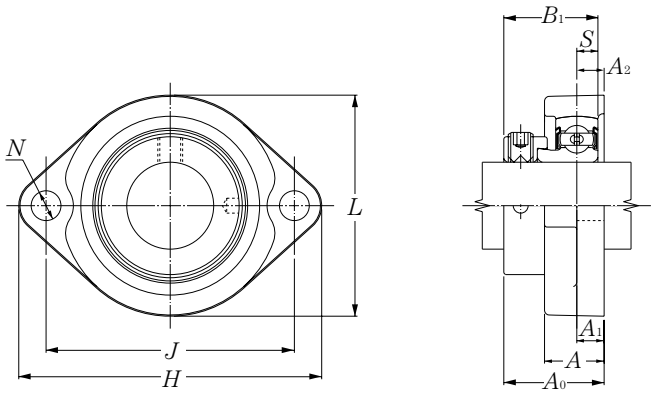


| Shaft dia. mm / inch | Unit number [1] | Nominal dimensions H | J | A2 | A1 | A (mm / inch) | N | L | A0 | B1 | S | Bolt size mm / inch | Bearing number [1] |
|---|---|---|---|---|---|---|---|---|---|---|---|---|---|
| 12 | AELFB201W3 | 81 | 63.5 | 9.5 | 9.5 | 18 | 7 | 56 | 31.6 | 28.6 | 6.5 | M6 | AEL201W3 |
| 1/2 | AELFB201-008W3 | 3 3/16 | 2 1/2 | 3/8 | 3/8 | 23/32 | 9/32 | 2 7/32 | 1 1/4 | 1.126 | 0.256 | 1/4 | AEL201-008W3 |
| 15 | AELFB202W3 | 81 | 63.5 | 9.5 | 9.5 | 18 | 7 | 56 | 31.6 | 28.6 | 6.5 | M6 | AEL202W3 |
| 9/16 | AELFB202-009W3 | 3 3/16 | 2 1/2 | 3/8 | 3/8 | 23/32 | 9/32 | 2 7/32 | 1 1/4 | 1.126 | 0.256 | 1/4 | AEL202-009W3 |
| 5/8 | AELFB202-010W3 | | | | | | | | | | | | AEL202-010W3 |
| 17 | AELFB203W3 | 81 | 63.5 | 9.5 | 9.5 | 18 | 7 | 56 | 31.6 | 28.6 | 6.5 | M6 | AEL203W3 |
| 11/16 | AELFB203-011W3 | 3 3/16 | 2 1/2 | 3/8 | 3/8 | 23/32 | 9/32 | 2 7/32 | 1 1/4 | 1.126 | 0.256 | 1/4 | AEL203-011W3 |
| 20 | AELFB204W3 | 90 | 71.5 | 11 | 11 | 20 | 10 | 61 | 34.5 | 31 | 7.5 | M8 | AEL204W3 |
| 3/4 | AELFB204-012W3 | 3 35/64 | 2 13/16 | 7/16 | 7/16 | 25/32 | 25/64 | 2 13/32 | 1 23/64 | 1.220 | 0.295 | 5/16 | AEL204-012W3 |
| 25 | AELFB205W3 | 95 | 76 | 11 | 11 | 20 | 10 | 64 | 34.5 | 31 | 7.5 | M8 | AEL205W3 |
| 13/16 | AELFB205-013W3 | | | | | | | | | | | | AEL205-013W3 |
| 7/8 | AELFB205-014W3 | 3 3/4 | 2 63/64 | 7/16 | 7/16 | 25/32 | 25/64 | 2 17/32 | 1 23/64 | 1.220 | 0.295 | 5/16 | AEL205-014W3 |
| 15/16 | AELFB205-015W3 | | | | | | | | | | | | AEL205-015W3 |
| 1 | AELFB205-100W3 | | | | | | | | | | | | AEL205-100W3 |
| 30 | AELFB206W3 | 113 | 90.5 | 12 | 12 | 22.5 | 12 | 76 | 38.7 | 35.7 | 9 | M10 | AEL206W3 |
| 1 1/16 | AELFB206-101W3 | | | | | | | | | | | | AEL206-101W3 |
| 1 1/8 | AELFB206-102W3 | 4 7/16 | 3 9/16 | 15/32 | 15/32 | 7/8 | 15/32 | 3 | 1 17/32 | 1.406 | 0.354 | 3/8 | AEL206-102W3 |
| 1 3/16 | AELFB206-103W3 | | | | | | | | | | | | AEL206-103W3 |
| 1 1/4 | AELFB206-104W3 | | | | | | | | | | | | AEL206-104W3 |
| 35 | AELFB207W3 | 122 | 100 | 11 | 13 | 24 | 12 | 89 | 40.4 | 38.9 | 9.5 | M10 | AEL207W3 |
| 1 1/4 | AELFB207-104W3 | | | | | | | | | | | | AEL207-104W3 |
| 1 5/16 | AELFB207-105W3 | 4 51/64 | 3 15/16 | 7/16 | 1/2 | 15/16 | 15/32 | 3 1/2 | 1 19/32 | 1.531 | 0.374 | 3/8 | AEL207-105W3 |
| 1 3/8 | AELFB207-106W3 | | | | | | | | | | | | AEL207-106W3 |
| 1 7/16 | AELFB207-107W3 | | | | | | | | | | | | AEL207-107W3 |

Remarks: 1) If relubricatable type is needed, please order with suffix "D1".

| Housing [1)] number | Mass of unit kg | lb |
|---|---|---|
| FB201 | 0.3 | |
| FB201 | 0.7 | |
| FB201 | 0.3 | |
| FB201 | 0.7 | |
| FB201 | 0.3 | |
| FB201 | 0.7 | |
| FB204 | 0.4 | |
| FB204 | 0.9 | |
| FB205 | 0.4 | |
| FB205 | 0.9 | |
| FB206 | 0.6 | |
| FB206 | 1.3 | |
| FB207 | 0.9 | |
| FB207 | 2.0 | |

## Light rhombus flanged units cast housing
## Eccentric locking collar type

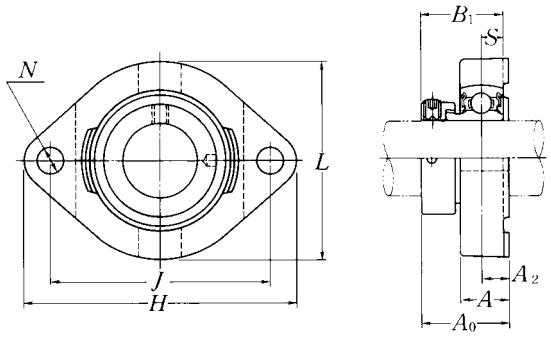


| Shaft dia. mm / inch | Unit number 1) | Nominal dimensions H | J | A2 | A | N | L | A0 | B1 | S | Bolt size mm / inch | Bearing 1) number | Housing 1) number | Mass of unit kg / lb |
|---|---|---|---|---|---|---|---|---|---|---|---|---|---|---|
| | | mm | | | | | inch | | | | | | | |
| 12 | AELFD201W3 | 81 | 63 | 8.5 | 15 | 7 | 59 | 30.6 | 28.6 | 6.5 | M 6 | AEL201W3 | FD201 | 0.3 |
| 1/2 | AELFD201-008W3 | 3 3/16 | 2 31/64 | 21/64 | 19/32 | 9/32 | 2 5/16 | 1 13/64 | 1.126 | 0.256 | 1/4 | AEL201-008W3 | FD201 | 0.7 |
| 15 | AELFD202W3 | 81 | 63 | 8.5 | 15 | 7 | 59 | 30.6 | 28.6 | 6.5 | M 6 | AEL202W3 | FD201 | 0.3 |
| 9/16 | AELFD202-009W3 | 3 3/16 | 2 31/64 | 21/64 | 19/32 | 9/32 | 2 5/16 | 1 13/64 | 1.126 | 0.256 | 1/4 | AEL202-009W3 | FD201 | 0.7 |
| 5/8 | AELFD202-010W3 | | | | | | | | | | | AEL202-010W3 | FD201 | |
| 17 | AELFD203W3 | 81 | 63 | 8.5 | 15 | 7 | 59 | 30.6 | 28.6 | 6.5 | M 6 | AEL203W3 | FD201 | 0.3 |
| 11/16 | AELFD203-011W3 | 3 3/16 | 2 31/64 | 21/64 | 19/32 | 9/32 | 2 5/16 | 1 13/64 | 1.126 | 0.256 | 1/4 | AEL203-011W3 | FD201 | 0.7 |
| 20 | AELFD204W3 | 90 | 71 | 9.5 | 17 | 10 | 67 | 33 | 31 | 7.5 | M 8 | AEL204W3 | FD204 | 0.4 |
| 3/4 | AELFD204-012W3 | 3 17/32 | 2 51/64 | 3/8 | 21/32 | 25/64 | 2 5/8 | 1 19/64 | 1.220 | 0.295 | 5/16 | AEL204-012W3 | FD204 | 0.9 |
| 25 | AELFD205W3 | 95 | 76 | 9.5 | 17 | 10 | 71 | 33 | 31 | 7.5 | M 8 | AEL205W3 | FD205 | 0.5 |
| 13/16 | AELFD205-013W3 | | | | | | | | | | | AEL205-013W3 | FD205 | |
| 7/8 | AELFD205-014W3 | 3 3/4 | 2 63/64 | 3/8 | 21/32 | 25/64 | 2 25/32 | 1 19/64 | 1.220 | 0.295 | 5/16 | AEL205-014W3 | FD205 | 1.1 |
| 15/16 | AELFD205-015W3 | | | | | | | | | | | AEL205-015W3 | FD205 | |
| 1 | AELFD205-100W3 | | | | | | | | | | | AEL205-100W3 | FD205 | |
| 30 | AELFD206W3 | 113 | 90 | 12 | 21 | 12 | 84 | 38.7 | 35.7 | 9 | M10 | AEL206W3 | FD206 | 0.8 |
| 1 1/16 | AELFD206-101W3 | | | | | | | | | | | AEL206-101W3 | FD206 | |
| 1 1/8 | AELFD206-102W3 | 4 7/16 | 3 17/32 | 15/32 | 13/16 | 15/32 | 3 5/16 | 1 17/32 | 1.406 | 0.354 | 3/8 | AEL206-102W3 | FD206 | 1.8 |
| 1 3/16 | AELFD206-103W3 | | | | | | | | | | | AEL206-103W3 | FD206 | |
| 1 1/4 | AELFD206-104W3 | | | | | | | | | | | AEL206-104W3 | FD206 | |
| 35 | AELFD207W3 | 125 | 100 | 12.5 | 22 | 12 | 94 | 41.9 | 38.9 | 9.5 | M10 | AEL207W3 | FD207 | 1.1 |
| 1 1/4 | AELFD207-104W3 | | | | | | | | | | | AEL207-104W3 | FD207 | |
| 1 5/16 | AELFD207-105W3 | 4 29/32 | 3 15/16 | 31/64 | 7/8 | 15/32 | 3 11/16 | 1 21/32 | 1.531 | 0.374 | 3/8 | AEL207-105W3 | FD207 | 2.4 |
| 1 3/8 | AELFD207-106W3 | | | | | | | | | | | AEL207-106W3 | FD207 | |
| 1 7/16 | AELFD207-107W3 | | | | | | | | | | | AEL207-107W3 | FD207 | |
| 40 | AELFD208W3 | 148 | 119 | 14.5 | 25 | 13.5 | 104 | 47.2 | 43.7 | 11 | M12 | AEL208W3 | FD208 | 1.5 |
| 1 1/2 | AELFD208-108W3 | 5 53/64 | 4 11/16 | 37/64 | 31/32 | 17/32 | 4 3/32 | 1 27/32 | 1.720 | 0.433 | 7/16 | AEL208-108W3 | FD208 | 3.3 |
| 1 9/16 | AELFD208-109W3 | | | | | | | | | | | AEL208-109W3 | FD208 | |

Remarks: 1) If relubricatable type is needed, please order with prefix "A-" and suffix "D1".
Example: A-AELFD201D1W3

## Light rhombus flanged units cast housing
## Eccentric locking collar type

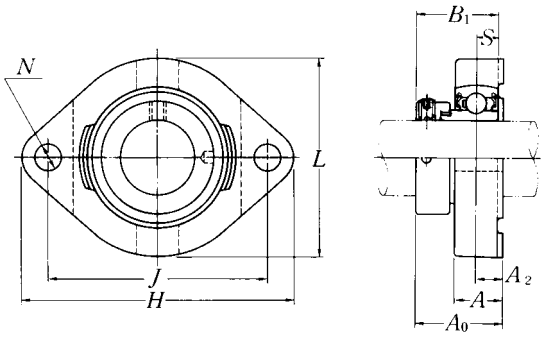


| Shaft dia. mm / inch | Unit number 1) | Nominal dimensions mm / inch H | J | A2 | A | N | L | A0 | B1 | S | Bolt size mm / inch | Bearing 1) number | Housing 1) number | Mass of unit kg / lb |
|---|---|---|---|---|---|---|---|---|---|---|---|---|---|---|
| 12 | JELFD201W3 | 81 | 63 | 8.5 | 15 | 7 | 59 | 30.6 | 28.6 | 6.5 | M 6 | JEL201W3 | FD201 | 0.3 |
| 1/2 | JELFD201-008W3 | 3 3/16 | 2 31/64 | 21/64 | 19/32 | 9/32 | 2 5/16 | 1 13/64 | 1.126 | 0.256 | 1/4 | JEL201-008W3 | FD201 | 0.7 |
| 15 | JELFD202W3 | 81 | 63 | 8.5 | 15 | 7 | 59 | 30.6 | 28.6 | 6.5 | M 6 | JEL202W3 | FD201 | 0.3 |
| 9/16 | JELFD202-009W3 | 3 3/16 | 2 31/64 | 21/64 | 19/32 | 9/32 | 2 5/16 | 1 13/64 | 1.126 | 0.256 | 1/4 | JEL202-009W3 | FD201 | 0.7 |
| 5/8 | JELFD202-010W3 | | | | | | | | | | | JEL202-010W3 | FD201 | |
| 17 | JELFD203W3 | 81 | 63 | 8.5 | 15 | 7 | 59 | 30.6 | 28.6 | 6.5 | M 6 | JEL203W3 | FD201 | 0.3 |
| 11/16 | JELFD203-011W3 | 3 3/16 | 2 31/64 | 21/64 | 19/32 | 9/32 | 2 5/16 | 1 13/64 | 1.126 | 0.256 | 1/4 | JEL203-011W3 | FD201 | 0.7 |
| 20 | JELFD204W3 | 90 | 71 | 9.5 | 17 | 10 | 67 | 33 | 31 | 7.5 | M 8 | JEL204W3 | FD204 | 0.4 |
| 3/4 | JELFD204-012W3 | 3 17/32 | 2 51/64 | 3/8 | 21/32 | 25/64 | 2 5/8 | 1 19/64 | 1.220 | 0.295 | 5/16 | JEL204-012W3 | FD204 | 0.9 |
| 25 | JELFD205W3 | 95 | 76 | 9.5 | 17 | 10 | 71 | 33 | 31 | 7.5 | M 8 | JEL205W3 | FD205 | 0.5 |
| 13/16 | JELFD205-013W3 | | | | | | | | | | | JEL205-013W3 | FD205 | |
| 7/8 | JELFD205-014W3 | 3 3/4 | 2 63/64 | 3/8 | 21/32 | 25/64 | 2 25/32 | 1 19/64 | 1.220 | 0.295 | 5/16 | JEL205-014W3 | FD205 | 0.9 |
| 15/16 | JELFD205-015W3 | | | | | | | | | | | JEL205-015W3 | FD205 | |
| 1 | JELFD205-100W3 | | | | | | | | | | | JEL205-100W3 | FD205 | |
| 30 | JELFD206W3 | 113 | 90 | 12 | 21 | 12 | 84 | 38.7 | 35.7 | 9 | M10 | JEL206W3 | FD206 | 0.8 |
| 1 1/16 | JELFD206-101W3 | | | | | | | | | | | JEL206-101W3 | FD206 | |
| 1 1/8 | JELFD206-102W3 | 4 7/16 | 3 17/32 | 15/32 | 13/16 | 15/32 | 3 5/16 | 1 17/32 | 1.406 | 0.354 | 3/8 | JEL206-102W3 | FD206 | 1.8 |
| 1 3/16 | JELFD206-103W3 | | | | | | | | | | | JEL206-103W3 | FD206 | |
| 1 1/4 | JELFD206-104W3 | | | | | | | | | | | JEL206-104W3 | FD206 | |
| 35 | JELFD207W3 | 125 | 100 | 12.5 | 22 | 12 | 94 | 41.9 | 38.9 | 9.5 | M10 | JEL207W3 | FD207 | 1.1 |
| 1 1/4 | JELFD207-104W3 | | | | | | | | | | | JEL207-104W3 | FD207 | |
| 1 5/16 | JELFD207-105W3 | 4 29/32 | 3 15/16 | 31/64 | 7/8 | 15/32 | 3 11/16 | 1 21/32 | 1.531 | 0.374 | 3/8 | JEL207-105W3 | FD207 | 2.4 |
| 1 3/8 | JELFD207-106W3 | | | | | | | | | | | JEL207-106W3 | FD207 | |
| 1 7/16 | JELFD207-107W3 | | | | | | | | | | | JEL207-107W3 | FD207 | |
| 40 | JELFD208W3 | 148 | 119 | 14.5 | 25 | 13.5 | 104 | 47.2 | 43.7 | 11 | M12 | JEL208W3 | FD208 | 1.5 |
| 1 1/2 | JELFD208-108W3 | 5 53/64 | 4 11/16 | 37/64 | 31/32 | 17/32 | 4 3/32 | 1 27/32 | 1.720 | 0.433 | 7/16 | JEL208-108W3 | FD208 | 3.3 |
| 1 9/16 | JELFD208-109W3 | | | | | | | | | | | JEL208-109W3 | FD208 | |

Remarks: 1) If relubricatable type is needed, please order with prefix "A-" and suffix "D1".
Example: A-JELFD201D1W3

## Round flanged units pressed steel housing
## Eccentric locking collar type

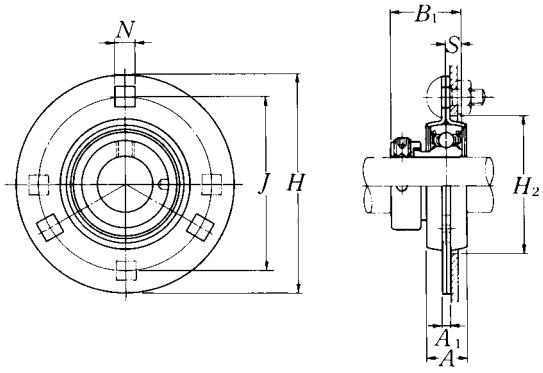


| Shaft dia. mm / inch | Unit number | Nominal dimensions mm / inch: H | J | A1 | N 1) | A | B1 | S | H2 min. | Bolt size mm / inch | Max. load recommended N radial | lbf axial | Bearing number |
|---|---|---|---|---|---|---|---|---|---|---|---|---|---|
| 12 | AELPF201W3 | 81 | 63.5 | 4 | 7.1 | 14 | 28.6 | 6.5 | 49 | M6 | 2 700 | 1 350 | AEL201W3 |
| 1/2 | AELPF201-008W3 | 3 3/16 | 2 1/2 | 0.157 | 9/32 | 9/16 | 1.126 | 0.256 | 1 59/64 | 1/4 | 600 | 300 | AEL201-008W3 |
| 15 | AELPF202W3 | 81 | 63.5 | 4 | 7.1 | 14 | 28.6 | 6.5 | 49 | M6 | 2 700 | 1 350 | AEL202W3 |
| 9/16 | AELPF202-009W3 | 3 3/16 | 2 1/2 | 0.157 | 9/32 | 9/16 | 1.126 | 0.256 | 1 59/64 | 1/4 | 600 | 300 | AEL202-009W3 |
| 5/8 | AELPF202-010W3 | | | | | | | | | | | | AEL202-010W3 |
| 17 | AELPF203W3 | 81 | 63.5 | 4 | 7.1 | 14 | 28.6 | 6.5 | 49 | M6 | 2 700 | 1 350 | AEL203W3 |
| 11/16 | AELPF203-011W3 | 3 3/16 | 2 1/2 | 0.157 | 9/32 | 9/16 | 1.126 | 0.256 | 1 59/64 | 1/4 | 600 | 300 | AEL203-011W3 |
| 20 | AELPF204W3 | 90 | 71.5 | 4 | 9 | 16 | 31 | 7.5 | 56 | M8 | 3 000 | 1 500 | AEL204W3 |
| 3/4 | AELPF204-012W3 | 3 17/32 | 2 13/16 | 0.157 | 23/64 | 5/8 | 1.220 | 0.295 | 2 13/64 | 5/16 | 660 | 330 | AEL204-012W3 |
| 25 | AELPF205W3 | 95 | 76 | 4 | 9 | 18 | 31 | 7.5 | 60 | M8 | 4 000 | 2 000 | AEL205W3 |
| 13/16 | AELPF205-013W3 | | | | | | | | | | | | AEL205-013W3 |
| 7/8 | AELPF205-014W3 | 3 3/4 | 2 63/64 | 0.157 | 23/64 | 23/32 | 1.220 | 0.295 | 2 23/64 | 5/16 | 880 | 440 | AEL205-014W3 |
| 15/16 | AELPF205-015W3 | | | | | | | | | | | | AEL205-015W3 |
| 1 | AELPF205-100W3 | | | | | | | | | | | | AEL205-100W3 |
| 30 | AELPF206W3 | 113 | 90.5 | 5.2 | 11 | 18 | 35.7 | 9 | 71 | M10 | 5 000 | 2 500 | AEL206W3 |
| 1 1/16 | AELPF206-101W3 | | | | | | | | | | | | AEL206-101W3 |
| 1 1/8 | AELPF206-102W3 | 4 7/16 | 3 9/16 | 0.205 | 7/16 | 23/32 | 1.406 | 0.354 | 2 51/64 | 3/8 | 1 100 | 550 | AEL206-102W3 |
| 1 3/16 | AELPF206-103W3 | | | | | | | | | | | | AEL206-103W3 |
| 1 1/4 | AELPF206-104W3 | | | | | | | | | | | | AEL206-104W3 |
| 35 | AELPF207W3 | 122 | 100 | 5.2 | 11 | 20 | 38.9 | 9.5 | 81 | M10 | 6 000 | 3 000 | AEL207W3 |
| 1 1/4 | AELPF207-104W3 | | | | | | | | | | | | AEL207-104W3 |
| 1 5/16 | AELPF207-105W3 | 4 13/16 | 3 15/16 | 0.205 | 7/16 | 25/32 | 1.531 | 0.374 | 3 3/16 | 3/8 | 1 300 | 650 | AEL207-105W3 |
| 1 3/8 | AELPF207-106W3 | | | | | | | | | | | | AEL207-106W3 |
| 1 7/16 | AELPF207-107W3 | | | | | | | | | | | | AEL207-107W3 |
| 40 | AELPF208W3 | 148 | 119 | 6.8 | 13.5 | 21 | 43.7 | 11 | 91 | M12 | 7 000 | 3 500 | AEL208W3 |
| 1 1/2 | AELPF208-108W3 | 5 13/16 | 4 11/16 | 0.268 | 17/32 | 13/16 | 1.720 | 0.433 | 3 37/64 | 1/2 | 1 500 | 750 | AEL208-108W3 |
| 1 9/16 | AELPF208-109W3 | | | | | | | | | | | | AEL208-109W3 |

Remarks: 1) AELPF208 has four bolt holes.
2) The permissible load only applies in applications where the load is stable and the speed is 2400 $min^{-1}$ or less.

| Housing number | Mass of unit kg | lb |
|---|---|---|
| PF203 | 0.3 | |
| PF203 | | 0.7 |
| PF203 | 0.3 | |
| PF203 | | 0.7 |
| PF203 | | |
| PF203 | 0.3 | |
| PF203 | | 0.7 |
| PF204 | 0.3 | |
| PF204 | | 0.7 |
| PF205 | 0.4 | |
| PF205 | | |
| PF205 | | 0.9 |
| PF205 | | |
| PF205 | | |
| PF206 | 0.6 | |
| PF206 | | |
| PF206 | | 1.3 |
| PF206 | | |
| PF206 | | |
| PF207 | 0.8 | |
| PF207 | | |
| PF207 | | 1.8 |
| PF207 | | |
| PF207 | | |
| PF208 | 1.4 | |
| PF208 | | 3.1 |
| PF208 | | |

## Round flanged units pressed steel housing
## Eccentric locking collar type

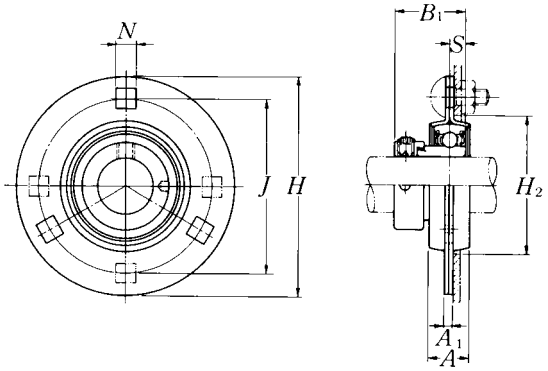


| Shaft dia. mm / inch | Unit number | Nominal dimensions mm / inch: H | J | A1 | N 1) | A | B1 | S | H2 min. | Bolt size mm / inch | Max. load recommended N radial | lbf axial | Bearing number |
|---|---|---|---|---|---|---|---|---|---|---|---|---|---|
| 12 | JELPF201W3 | 81 | 63.5 | 4 | 7.1 | 14 | 28.6 | 6.5 | 49 | M6 | 2 700 | 1 350 | JEL201W3 |
| 1/2 | JELPF201-008W3 | 3 3/16 | 2 1/2 | 0.157 | 9/32 | 9/16 | 1.126 | 0.256 | 1 59/64 | 1/4 | 600 | 300 | JEL201-008W3 |
| 15 | JELPF202W3 | 81 | 63.5 | 4 | 7.1 | 14 | 28.6 | 6.5 | 49 | M6 | 2 700 | 1 350 | JEL202W3 |
| 9/16 | JELPF202-009W3 | 3 3/16 | 2 1/2 | 0.157 | 9/32 | 9/16 | 1.126 | 0.256 | 1 59/64 | 1/4 | 600 | 300 | JEL202-009W3 |
| 5/8 | JELPF202-010W3 | | | | | | | | | | | | JEL202-010W3 |
| 17 | JELPF203W3 | 81 | 63.5 | 4 | 7.1 | 14 | 28.6 | 6.5 | 49 | M6 | 2 700 | 1 350 | JEL203W3 |
| 11/16 | JELPF203-011W3 | 3 3/16 | 2 1/2 | 0.157 | 9/32 | 9/16 | 1.126 | 0.256 | 1 59/64 | 1/4 | 600 | 300 | JEL203-011W3 |
| 20 | JELPF204W3 | 90 | 71.5 | 4 | 9 | 16 | 31 | 7.5 | 56 | M8 | 3 000 | 1 500 | JEL204W3 |
| 3/4 | JELPF204-012W3 | 3 17/32 | 2 13/16 | 0.157 | 23/64 | 5/8 | 1.220 | 0.295 | 2 13/64 | 5/16 | 660 | 330 | JEL204-012W3 |
| 25 | JELPF205W3 | 95 | 76 | 4 | 9 | 18 | 31 | 7.5 | 60 | M8 | 4 000 | 2 000 | JEL205W3 |
| 13/16 | JELPF205-013W3 | | | | | | | | | | | | JEL205-013W3 |
| 7/8 | JELPF205-014W3 | 3 3/4 | 2 63/64 | 0.157 | 23/64 | 23/32 | 1.220 | 0.295 | 2 23/64 | 5/16 | 800 | 440 | JEL205-014W3 |
| 15/16 | JELPF205-015W3 | | | | | | | | | | | | JEL205-015W3 |
| 1 | JELPF205-100W3 | | | | | | | | | | | | JEL205-100W3 |
| 30 | JELPF206W3 | 113 | 90.5 | 5.2 | 11 | 18 | 35.7 | 9 | 71 | M10 | 5 000 | 2 500 | JEL206W3 |
| 1 1/16 | JELPF206-101W3 | | | | | | | | | | | | JEL206-101W3 |
| 1 1/8 | JELPF206-102W3 | 4 7/16 | 3 9/16 | 0.205 | 7/16 | 23/32 | 1.406 | 0.354 | 2 51/64 | 3/8 | 1 100 | 550 | JEL206-102W3 |
| 1 3/16 | JELPF206-103W3 | | | | | | | | | | | | JEL206-103W3 |
| 1 1/4 | JELPF206-104W3 | | | | | | | | | | | | JEL206-104W3 |
| 35 | JELPF207W3 | 122 | 100 | 5.2 | 11 | 20 | 38.9 | 9.5 | 81 | M10 | 6 000 | 3 000 | JEL207W3 |
| 1 1/4 | JELPF207-104W3 | | | | | | | | | | | | JEL207-104W3 |
| 1 5/16 | JELPF207-105W3 | 4 13/16 | 3 15/16 | 0.205 | 7/16 | 25/32 | 1.531 | 0.374 | 3 3/16 | 3/8 | 1 300 | 650 | JEL207-105W3 |
| 1 3/8 | JELPF207-106W3 | | | | | | | | | | | | JEL207-106W3 |
| 1 7/16 | JELPF207-107W3 | | | | | | | | | | | | JEL207-107W3 |
| 40 | JELPF208W3 | 148 | 119 | 6.8 | 13.5 | 21 | 43.7 | 11 | 91 | M12 | 7 000 | 3 500 | JEL208W3 |
| 1 1/2 | JELPF208-108W3 | 5 3/16 | 4 11/16 | 0.268 | 17/32 | 13/16 | 1.720 | 0.433 | 3 37/64 | 1/2 | 1 500 | 750 | JEL208-108W3 |
| 1 9/16 | JELPF208-109W3 | | | | | | | | | | | | JEL208-109W3 |

Remarks: 1) JELPF208 has four bolt holes.
2) The permissible load only applies in applications where the load is stable and the speed is 2400 $min^{-1}$ or less.

| Housing number | Mass of unit kg | lb |
|---|---|---|
| PF203 | 0.3 | |
| PF203 | 0.7 | |
| PF203 | 0.2 | |
| PF203 | 0.4 | |
| PF203 | | |
| PF203 | 0.2 | |
| PF203 | 0.4 | |
| PF204 | 0.3 | |
| PF204 | 0.7 | |
| PF205 | 0.4 | |
| PF205 | | |
| PF205 | 0.9 | |
| PF205 | | |
| PF205 | | |
| PF206 | 0.6 | |
| PF206 | | |
| PF206 | 1.3 | |
| PF206 | | |
| PF206 | | |
| PF207 | 0.8 | |
| PF207 | | |
| PF207 | 1.8 | |
| PF207 | | |
| PF207 | | |
| PF208 | 1.4 | |
| PF208 | 3.1 | |
| PF208 | | |

## Round flanged units pressed steel housing with rubber ring
## Eccentric locking collar type

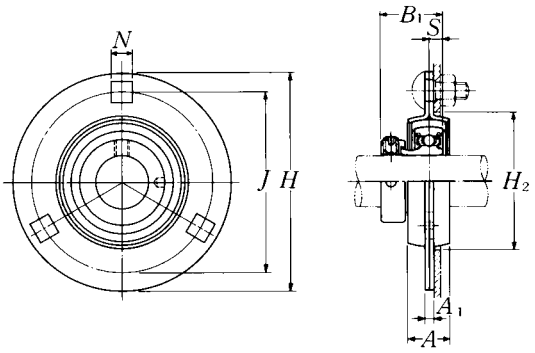


| Shaft dia. mm / inch | Unit number | Nominal dimensions mm / inch: H | J | A1 | N | A | B1 | S | H2 min. | Bolt size mm / inch | Max. load recommended N radial | lbf axial | Bearing number |
|---|---|---|---|---|---|---|---|---|---|---|---|---|---|
| 12 | AELRPF201W3 | 90 | 71.5 | 4 | 9 | 16 | 28.6 | 6.5 | 56 | M8 | 1 000 | 200 | AEL201W3 |
| 1/2 | AELRPF201-008W3 | 3 17/32 | 2 13/16 | 0.157 | 23/64 | 5/8 | 1.126 | 0.256 | 2 13/64 | 5/16 | 220 | 40 | AEL201-008W3 |
| 15 | AELRPF202W3 | 90 | 71.5 | 4 | 9 | 16 | 28.6 | 6.5 | 56 | M8 | 1 000 | 200 | AEL202W3 |
| 9/16 | AELRPF202-009W3 | 3 17/32 | 2 13/16 | 0.157 | 23/64 | 5/8 | 1.126 | 0.256 | 2 13/64 | 5/16 | 220 | 40 | AEL202-009W3 |
| 5/8 | AELRPF202-010W3 | | | | | | | | | | | | AEL202-010W3 |
| 17 | AELRPF203W3 | 90 | 71.5 | 4 | 9 | 16 | 28.6 | 6.5 | 56 | M8 | 1 000 | 200 | AEL203W3 |
| 11/16 | AELRPF203-011W3 | 3 17/32 | 2 13/16 | 0.157 | 23/64 | 5/8 | 1.126 | 0.256 | 2 13/64 | 5/16 | 220 | 40 | AEL203-011W3 |
| 20 | AELRPF204W3 | 95 | 76 | 4 | 9 | 18 | 31 | 7.5 | 60 | M8 | 1 150 | 200 | AEL204W3 |
| 3/4 | AELRPF204-012W3 | 3 3/4 | 2 63/64 | 0.157 | 23/64 | 23/32 | 1.220 | 0.295 | 2 23/64 | 5/16 | 250 | 40 | AEL204-012W3 |
| 25 | AELRPF205W3 | 113 | 90.5 | 5.2 | 11 | 18 | 31 | 7.5 | 71 | M10 | 1 300 | 200 | AEL205W3 |
| 13/16 | AELRPF205-013W3 | | | | | | | | | | | | AEL205-013W3 |
| 7/8 | AELRPF205-014W3 | 4 7/16 | 3 9/16 | 0.205 | 7/16 | 23/32 | 1.220 | 0.295 | 2 51/64 | 3/8 | 280 | 40 | AEL205-014W3 |
| 15/16 | AELRPF205-015W3 | | | | | | | | | | | | AEL205-015W3 |
| 1 | AELRPF205-100W3 | | | | | | | | | | | | AEL205-100W3 |
| 30 | AELRPF206W3 | 122 | 100 | 5.2 | 11 | 20 | 35.7 | 9 | 81 | M10 | 1 500 | 200 | AEL206W3 |
| 1 1/16 | AELRPF206-101W3 | | | | | | | | | | | | AEL206-101W3 |
| 1 1/8 | AELRPF206-102W3 | 4 13/16 | 3 15/16 | 0.205 | 7/16 | 25/32 | 1.406 | 0.354 | 3 3/16 | 3/8 | 330 | 40 | AEL206-102W3 |
| 1 3/16 | AELRPF206-103W3 | | | | | | | | | | | | AEL206-103W3 |
| 1 1/4 | AELRPF206-104W3 | | | | | | | | | | | | AEL206-104W3 |

| Housing number | | Mass of unit |
|---|---|---|
| Rubber | Steel | kg lb |
| R201 | PF204 | 0.3 |
| R201 | PF204 | 0.7 |
| R201 | PF204 | 0.3 |
| R201 | PF204 | 0.7 |
| R201 | PF204 | |
| R201 | PF204 | 0.3 |
| R201 | PF204 | 0.7 |
| R204 | PF205 | 0.4 |
| R204 | PF205 | 0.9 |
| R205 | PF206 | 0.5 |
| R205 | PF206 | 1.1 |
| R205 | PF206 | |
| R205 | PF206 | |
| R205 | PF206 | |
| R206 | PF207 | 0.7 |
| R206 | PF207 | 1.5 |
| R206 | PF207 | |
| R206 | PF207 | |
| R206 | PF207 | |

## Rhombus flanged units pressed steel housing
## Eccentric locking collar type

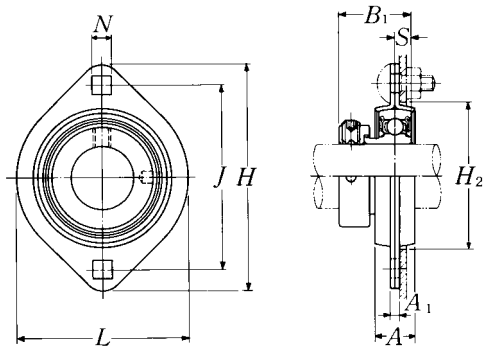


| Shaft dia. mm / inch | Unit number | Nominal dimensions mm / inch: H | J | A1 | N | A | L | B1 | S | H2 | Bolt size mm / inch | Max. load recommended N radial | lbf axial |
|---|---|---|---|---|---|---|---|---|---|---|---|---|---|
| 12 | AELPFL201W3 | 81 | 63.5 | 4 | 7.1 | 14 | 59 | 28.6 | 6.5 | 49 | M 6 | 2 700 | 1 350 |
| 1/2 | AELPFL201-008W3 | 3 3/16 | 2 1/2 | 0.157 | 9/32 | 9/16 | 2 5/16 | 1.126 | 0.256 | 1 59/64 | 1/4 | 600 | 300 |
| 15 | AELPFL202W3 | 81 | 63.5 | 4 | 7.1 | 14 | 59 | 28.6 | 6.5 | 49 | M 6 | 2 700 | 1 350 |
| 9/16 | AELPFL202-009W3 | 3 3/16 | 2 1/2 | 0.157 | 9/32 | 9/16 | 2 5/16 | 1.126 | 0.256 | 1 59/64 | 1/4 | 600 | 300 |
| 5/8 | AELPFL202-010W3 | | | | | | | | | | | | |
| 17 | AELPFL203W3 | 81 | 63.5 | 4 | 7.1 | 14 | 59 | 28.6 | 6.5 | 49 | M 6 | 2 700 | 1 350 |
| 11/16 | AELPFL203-011W3 | 3 3/16 | 2 1/2 | 0.157 | 9/32 | 9/16 | 2 5/16 | 1.126 | 0.256 | 1 59/64 | 1/4 | 600 | 300 |
| 20 | AELPFL204W3 | 90 | 71.5 | 4 | 9 | 16 | 67 | 31 | 7.5 | 56 | M 8 | 3 000 | 1 500 |
| 3/4 | AELPFL204-012W3 | 3 17/32 | 2 13/16 | 0.157 | 23/64 | 5/8 | 2 5/8 | 1.220 | 0.295 | 2 13/64 | 5/16 | 660 | 330 |
| 25 | AELPFL205W3 | 95 | 76 | 4 | 9 | 18 | 71 | 31 | 7.5 | 60 | M 8 | 4 000 | 2 000 |
| 13/16 | AELPFL205-013W3 | | | | | | | | | | | | |
| 7/8 | AELPFL205-014W3 | 3 3/4 | 2 63/64 | 0.157 | 23/64 | 23/32 | 2 25/32 | 1.220 | 0.295 | 2 23/64 | 5/16 | 880 | 440 |
| 15/16 | AELPFL205-015W3 | | | | | | | | | | | | |
| 1 | AELPFL205-100W3 | | | | | | | | | | | | |
| 30 | AELPFL206W3 | 113 | 90.5 | 5.2 | 11 | 18 | 84 | 35.7 | 9 | 71 | M10 | 5 000 | 2 500 |
| 1 1/16 | AELPFL206-101W3 | | | | | | | | | | | | |
| 1 1/8 | AELPFL206-102W3 | 4 7/16 | 3 9/16 | 0.205 | 7/16 | 23/32 | 3 5/16 | 1.406 | 0.354 | 2 51/64 | 3/8 | 1 100 | 550 |
| 1 3/16 | AELPFL206-103W3 | | | | | | | | | | | | |
| 1 1/4 | AELPFL206-104W3 | | | | | | | | | | | | |
| 35 | AELPFL207W3 | 122 | 100 | 5.2 | 11 | 20 | 94 | 38.9 | 9.5 | 81 | M10 | 6 000 | 3 000 |
| 1 1/4 | AELPFL207-104W3 | | | | | | | | | | | | |
| 1 5/16 | AELPFL207-105W3 | 4 13/16 | 3 15/16 | 0.205 | 7/16 | 25/32 | 3 11/16 | 1.531 | 0.374 | 3 3/16 | 3/8 | 1 300 | 650 |
| 1 3/8 | AELPFL207-106W3 | | | | | | | | | | | | |
| 1 7/16 | AELPFL207-107W3 | | | | | | | | | | | | |
| 40 | AELPFL208W3 | 148 | 119 | 6.8 | 13.5 | 21 | 100 | 43.7 | 11 | 91 | M12 | 6 000 | 3 000 |
| 1 1/2 | AELPFL208-108W3 | 5 13/16 | 4 11/16 | 0.268 | 17/32 | 13/16 | 3 15/16 | 1.720 | 0.433 | 3 37/64 | 1/2 | 1 300 | 650 |
| 1 9/16 | AELPFL208-109W3 | | | | | | | | | | | | |

Remarks: 1) The permissible load only applies in applications where the load is stable and the speed is 2400 $min^{-1}$ or less.

| Bearing number | Housing number | Mass of unit kg lb |
|---|---|---|
| AEL201W3 | PFL203 | 0.3 |
| AEL201-008W3 | PFL203 | 0.7 |
| AEL202W3 | PFL203 | 0.3 |
| AEL202-009W3 | PFL203 | 0.7 |
| AEL202-010W3 | PFL203 | |
| AEL203W3 | PFL203 | 0.3 |
| AEL203-011W3 | PFL203 | 0.7 |
| AEL204W3 | PFL204 | 0.3 |
| AEL204-012W3 | PFL204 | 0.7 |
| AEL205W3 | PFL205 | 0.4 |
| AEL205-013W3 | PFL205 | 0.9 |
| AEL205-014W3 | PFL205 | |
| AEL205-015W3 | PFL205 | |
| AEL205-100W3 | PFL205 | |
| AEL206W3 | PFL206 | 0.6 |
| AEL206-101W3 | PFL206 | 1.3 |
| AEL206-102W3 | PFL206 | |
| AEL206-103W3 | PFL206 | |
| AEL206-104W3 | PFL206 | |
| AEL207W3 | PFL207 | 0.9 |
| AEL207-104W3 | PFL207 | 2.0 |
| AEL207-105W3 | PFL207 | |
| AEL207-106W3 | PFL207 | |
| AEL207-107W3 | PFL207 | |
| AEL208W3 | PFL208 | 1.3 |
| AEL208-108W3 | PFL208 | 2.9 |
| AEL208-109W3 | PFL208 | |

## Rhombus flanged units pressed steel housing
## Eccentric locking collar type

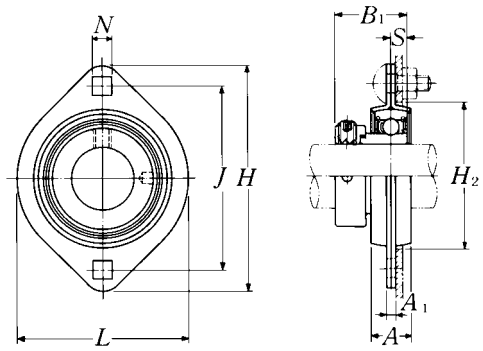


| Shaft dia. mm / inch | Unit number | Nominal dimensions H | J | A1 | N | A | L | B1 | S | H2 | Bolt size mm / inch | Max. load recommended N radial | lbf axial |
|---|---|---|---|---|---|---|---|---|---|---|---|---|---|
| | | | | | | mm | inch | | | | | | |
| 12 | JELPFL201W3 | 81 | 63 | 4 | 7.1 | 14 | 59 | 28.6 | 6.5 | 49 | M 6 | 2 700 | 1 350 |
| 1/2 | JELPFL201-008W3 | 3 3/16 | 2 31/64 | 0.157 | 9/32 | 9/16 | 2 5/16 | 1.126 | 0.256 | 1 59/64 | 1/4 | 600 | 300 |
| 15 | JELPFL202W3 | 81 | 63 | 4 | 7.1 | 14 | 59 | 28.6 | 6.5 | 49 | M 6 | 2 700 | 1 350 |
| 9/16 | JELPFL202-009W3 | 3 3/16 | 2 31/64 | 0.157 | 9/32 | 9/16 | 2 5/16 | 1.126 | 0.256 | 1 59/64 | 1/4 | 600 | 300 |
| 5/8 | JELPFL202-010W3 | | | | | | | | | | | | |
| 17 | JELPFL203W3 | 81 | 63 | 4 | 7.1 | 14 | 59 | 28.6 | 6.5 | 49 | M 6 | 2 700 | 1 350 |
| 11/16 | JELPFL203-011W3 | 3 3/16 | 2 31/64 | 0.157 | 9/32 | 9/16 | 2 5/16 | 1.126 | 0.256 | 1 59/64 | 1/4 | 600 | 300 |
| 20 | JELPFL204W3 | 90 | 71 | 4 | 9 | 16 | 67 | 31 | 7.5 | 56 | M 8 | 3 000 | 1 500 |
| 3/4 | JELPFL204-012W3 | 3 17/32 | 2 51/64 | 0.157 | 23/64 | 5/8 | 2 5/8 | 1.220 | 0.295 | 2 13/64 | 5/16 | 660 | 330 |
| 25 | JELPFL205W3 | 95 | 76 | 4 | 9 | 18 | 71 | 31 | 7.5 | 60 | M 8 | 4 000 | 2 000 |
| 13/16 | JELPFL205-013W3 | | | | | | | | | | | | |
| 7/8 | JELPFL205-014W3 | 3 3/4 | 2 63/64 | 0.157 | 23/64 | 23/32 | 2 25/32 | 1.220 | 0.295 | 2 23/64 | 5/16 | 880 | 440 |
| 15/16 | JELPFL205-015W3 | | | | | | | | | | | | |
| 1 | JELPFL205-100W3 | | | | | | | | | | | | |
| 30 | JELPFL206W3 | 113 | 90 | 5.2 | 11 | 18 | 84 | 35.7 | 9 | 71 | M10 | 5 000 | 2 500 |
| 1 1/16 | JELPFL206-101W3 | | | | | | | | | | | | |
| 1 1/8 | JELPFL206-102W3 | 4 7/16 | 3 35/64 | 0.205 | 7/16 | 23/32 | 3 5/16 | 1.406 | 0.354 | 2 51/64 | 3/8 | 1 100 | 550 |
| 1 3/16 | JELPFL206-103W3 | | | | | | | | | | | | |
| 1 1/4 | JELPFL206-104W3 | | | | | | | | | | | | |
| 35 | JELPFL207W3 | 122 | 100 | 5.2 | 11 | 20 | 94 | 38.9 | 9.5 | 81 | M10 | 6 000 | 3 000 |
| 1 1/4 | JELPFL207-104W3 | | | | | | | | | | | | |
| 1 5/16 | JELPFL207-105W3 | 4 13/16 | 3 15/16 | 0.205 | 7/16 | 25/32 | 3 11/16 | 1.531 | 0.374 | 3 3/16 | 3/8 | 1 300 | 650 |
| 1 3/8 | JELPFL207-106W3 | | | | | | | | | | | | |
| 1 7/16 | JELPFL207-107W3 | | | | | | | | | | | | |
| 40 | JELPFL208W3 | 148 | 119 | 6.8 | 13.5 | 21 | 100 | 43.7 | 11 | 91 | M12 | 6 000 | 3 000 |
| 1 1/2 | JELPFL208-108W3 | 5 13/16 | 4 11/16 | 0.268 | 17/32 | 13/16 | 3 15/16 | 1.720 | 0.433 | 3 37/64 | 1/2 | 1 300 | 650 |
| 1 9/16 | JELPFL208-109W3 | | | | | | | | | | | | |

Remarks: 1) The permissible load only applies in applications where the load is stable and the speed is 2400 $min^{-1}$ or less.

| Bearing number | Housing number | Mass of unit kg lb |
|---|---|---|
| JEL201W3 | PFL203 | 0.3 |
| JEL201-008W3 | PFL203 | 0.7 |
| JEL202W3 | PFL203 | 0.3 |
| JEL202-009W3 | PFL203 | 0.7 |
| JEL202-010W3 | PFL203 | |
| JEL203W3 | PFL203 | 0.3 |
| JEL203-011W3 | PFL203 | 0.7 |
| JEL204W3 | PFL204 | 0.3 |
| JEL204-012W3 | PFL204 | 0.7 |
| JEL205W3 | PFL205 | 0.4 |
| JEL205-013W3 | PFL205 | 0.9 |
| JEL205-014W3 | PFL205 | |
| JEL205-015W3 | PFL205 | |
| JEL205-100W3 | PFL205 | |
| JEL206W3 | PFL206 | 0.7 |
| JEL206-101W3 | PFL206 | 1.5 |
| JEL206-102W3 | PFL206 | |
| JEL206-103W3 | PFL206 | |
| JEL206-104W3 | PFL206 | |
| JEL207W3 | PFL207 | 0.9 |
| JEL207-104W3 | PFL207 | 2.0 |
| JEL207-105W3 | PFL207 | |
| JEL207-106W3 | PFL207 | |
| JEL207-107W3 | PFL207 | |
| JEL208W3 | PFL208 | 1.3 |
| JEL208-108W3 | PFL208 | 2.9 |
| JEL208-109W3 | PFL208 | |

## Take-up units cast housing
## Eccentric locking collar type

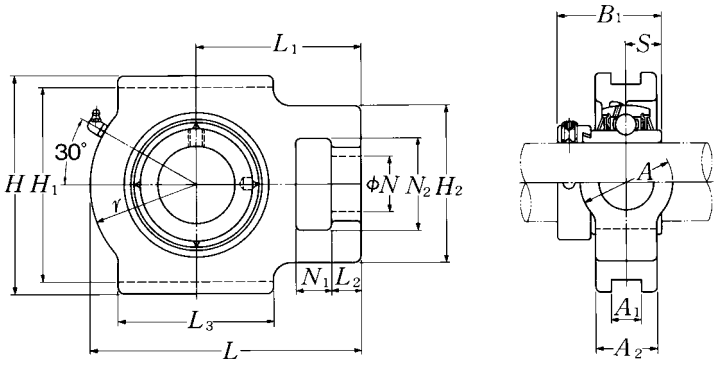


| Shaft dia. mm / inch | Unit number [1] | Nominal dimensions (mm / inch) $N_1$ | $L_2$ | $H_2$ | $N_2$ | $N$ | $L_3$ | $A_1$ | $H_1$ | $H$ | $L$ | $A_2$ | $A$ | $r$ | $L_1$ | $B_1$ | $S$ |
|---|---|---|---|---|---|---|---|---|---|---|---|---|---|---|---|---|---|
| 20 | UELT204D1W3 | 16 | 12 | 51 | 32 | 19 | 51 | 12 | 76 | 89 | 94 | 21 | 32 | 33 | 61 | 43.7 | 17.1 |
| 3/4 | UELT204-012D1W3 | 5/8 | 15/32 | 2 | 1 1/4 | 3/4 | 2 | 0.472 | 2 63/64 | 3 1/2 | 3 11/16 | 13/16 | 1 1/4 | 1 5/16 | 2 13/32 | 1.720 | 0.673 |
| 25 | UELT205D1W3 | 16 | 12 | 51 | 32 | 19 | 51 | 12 | 76 | 89 | 97 | 24 | 32 | 35 | 62 | 44.4 | 17.45 |
| 13/16 | UELT205-013D1W3 | | | | | | | | | | | | | | | | |
| 7/8 | UELT205-014D1W3 | 5/8 | 15/32 | 2 | 1 1/4 | 3/4 | 2 | 0.472 | 2 63/64 | 3 1/2 | 3 13/16 | 15/16 | 1 1/4 | 1 3/8 | 2 7/16 | 1.748 | 0.687 |
| 15/16 | UELT205-015D1W3 | | | | | | | | | | | | | | | | |
| 1 | UELT205-100D1W3 | | | | | | | | | | | | | | | | |
| 30 | UELT206D1W3 | 16 | 12 | 56 | 37 | 22 | 57 | 12 | 89 | 102 | 113 | 28 | 37 | 43 | 70 | 48.4 | 18.25 |
| 1 1/16 | UELT206-101D1W3 | | | | | | | | | | | | | | | | |
| 1 1/8 | UELT206-102D1W3 | 5/8 | 15/32 | 2 7/32 | 1 15/32 | 7/8 | 2 1/4 | 0.472 | 3 1/2 | 4 1/32 | 4 7/16 | 1 3/32 | 1 15/32 | 1 11/16 | 2 3/4 | 1.906 | 0.719 |
| 1 3/16 | UELT206-103D1W3 | | | | | | | | | | | | | | | | |
| 1 1/4 | UELT206-104D1W3 | | | | | | | | | | | | | | | | |
| 35 | UELT207D1W3 | 16 | 15 | 64 | 37 | 22 | 64 | 12 | 89 | 102 | 129 | 30 | 37 | 51 | 78 | 51.1 | 18.8 |
| 1 1/4 | UELT207-104D1W3 | | | | | | | | | | | | | | | | |
| 1 5/16 | UELT207-105D1W3 | 5/8 | 19/32 | 2 17/32 | 1 15/32 | 7/8 | 2 17/32 | 0.472 | 3 1/2 | 4 1/32 | 5 3/32 | 1 3/16 | 1 15/32 | 2 | 3 1/16 | 2.012 | 0.740 |
| 1 3/8 | UELT207-106D1W3 | | | | | | | | | | | | | | | | |
| 1 7/16 | UELT207-107D1W3 | | | | | | | | | | | | | | | | |
| 40 | UELT208D1W3 | 19 | 18 | 83 | 49 | 29 | 83 | 16 | 102 | 114 | 144 | 33 | 49 | 56 | 88 | 56.3 | 21.4 |
| 1 1/2 | UELT208-108D1W3 | 3/4 | 23/32 | 3 9/32 | 1 15/16 | 1 5/32 | 3 9/32 | 0.630 | 4 1/64 | 4 1/2 | 5 21/32 | 1 5/16 | 1 15/16 | 2 7/32 | 3 15/32 | 2.217 | 0.843 |
| 1 9/16 | UELT208-109D1W3 | | | | | | | | | | | | | | | | |
| 45 | UELT209D1W3 | 19 | 18 | 83 | 49 | 29 | 83 | 16 | 102 | 117 | 145 | 35 | 49 | 57 | 88 | 56.3 | 21.4 |
| 1 5/8 | UELT209-110D1W3 | | | | | | | | | | | | | | | | |
| 1 11/16 | UELT209-111D1W3 | 3/4 | 23/32 | 3 9/32 | 1 15/16 | 1 5/32 | 3 9/32 | 0.630 | 4 1/64 | 4 19/32 | 5 23/32 | 1 3/8 | 1 15/16 | 2 1/4 | 3 15/32 | 2.217 | 0.843 |
| 1 3/4 | UELT209-112D1W3 | | | | | | | | | | | | | | | | |
| 50 | UELT210D1W3 | 19 | 18 | 83 | 49 | 29 | 86 | 16 | 102 | 117 | 151 | 37 | 49 | 59 | 92 | 62.7 | 24.6 |
| 1 13/16 | UELT210-113D1W3 | | | | | | | | | | | | | | | | |
| 1 7/8 | UELT210-114D1W3 | 3/4 | 23/32 | 3 9/32 | 1 15/16 | 1 5/32 | 3 3/8 | 0.630 | 4 1/64 | 4 19/32 | 5 15/16 | 1 15/32 | 1 15/16 | 2 5/16 | 3 5/8 | 2.469 | 0.969 |
| 1 15/16 | UELT210-115D1W3 | | | | | | | | | | | | | | | | |
| 2 | UELT210-200D1W3 | | | | | | | | | | | | | | | | |

Remarks: 1) These numbers indicate relubricatable type. If maintenance free type is needed, please order without suffix "D1".
Note: Please refer to page 36 for size of grease fitting.

| Bearing number | Housing [1)] number | Mass of unit kg | lb |
|---|---|---|---|
| UEL204D1W3 | T204D1 | 0.6 | |
| UEL204-012D1W3 | T204D1 | 1.3 | |
| UEL205D1W3 | T205D1 | 0.9 | |
| UEL205-013D1W3 | T205D1 | 2.0 | |
| UEL205-014D1W3 | T205D1 | | |
| UEL205-015D1W3 | T205D1 | | |
| UEL205-100D1W3 | T205D1 | | |
| UEL206D1W3 | T206D1 | 1.4 | |
| UEL206-101D1W3 | T206D1 | 3.1 | |
| UEL206-102D1W3 | T206D1 | | |
| UEL206-103D1W3 | T206D1 | | |
| UEL206-104D1W3 | T206D1 | | |
| UEL207D1W3 | T207D1 | 1.7 | |
| UEL207-104D1W3 | T207D1 | 3.8 | |
| UEL207-105D1W3 | T207D1 | | |
| UEL207-106D1W3 | T207D1 | | |
| UEL207-107D1W3 | T207D1 | | |
| UEL208D1W3 | T208D1 | 2.5 | |
| UEL208-108D1W3 | T208D1 | 5.5 | |
| UEL208-109D1W3 | T208D1 | | |
| UEL209D1W3 | T209D1 | 2.5 | |
| UEL209-110D1W3 | T209D1 | 5.5 | |
| UEL209-111D1W3 | T209D1 | | |
| UEL209-112D1W3 | T209D1 | | |
| UEL210D1W3 | T210D1 | 2.7 | |
| UEL210-113D1W3 | T210D1 | 6.0 | |
| UEL210-114D1W3 | T210D1 | | |
| UEL210-115D1W3 | T210D1 | | |
| UEL210-200D1W3 | T210D1 | | |

## Take-up units cast housing
## Eccentric locking collar type

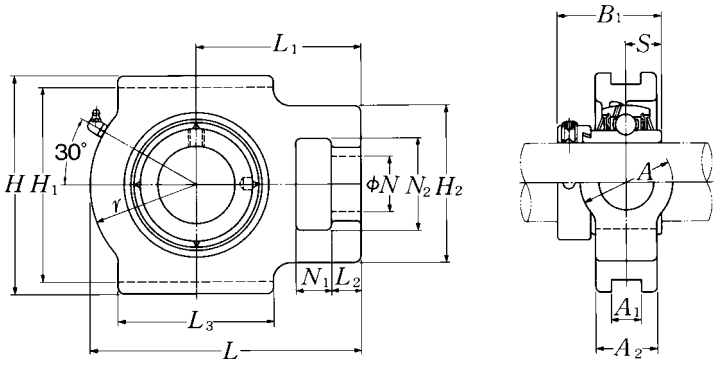


| Shaft dia. mm / inch | Unit number [1] | Nominal dimensions mm / inch | | | | | | | | | | | | | | | |
|---|---|---|---|---|---|---|---|---|---|---|---|---|---|---|---|---|---|
| | | $N_1$ | $L_2$ | $H_2$ | $N_2$ | $N$ | $L_3$ | $A_1$ | $H_1$ | $H$ | $L$ | $A_2$ | $A$ | $r$ | $L_1$ | $B_1$ | $S$ |
| **55** | **UELT211D1W3** | 25 | 21 | 102 | 64 | 35 | 95 | 22 | 130 | 146 | 171 | 38 | 64 | 65 | 106 | 71.4 | 27.75 |
| **2** | **UELT211-200D1W3** | | | | | | | | | | | | | | | | |
| **2 1/16** | **UELT211-201D1W3** | 31/32 | 13/16 | 4 1/32 | 2 17/32 | 1 3/8 | 3 3/4 | 0.866 | 5 1/8 | 5 3/4 | 6 23/32 | 1 1/2 | 2 17/32 | 2 9/16 | 4 3/16 | 2.811 | 1.093 |
| **2 1/8** | **UELT211-202D1W3** | | | | | | | | | | | | | | | | |
| **2 3/16** | **UELT211-203D1W3** | | | | | | | | | | | | | | | | |
| **60** | **UELT212D1W3** | 32 | 21 | 102 | 64 | 35 | 102 | 22 | 130 | 146 | 194 | 42 | 64 | 75 | 119 | 77.8 | 30.95 |
| **2 1/4** | **UELT212-204D1W3** | | | | | | | | | | | | | | | | |
| **2 5/16** | **UELT212-205D1W3** | 1 1/4 | 13/16 | 4 1/32 | 2 17/32 | 1 3/8 | 4 1/32 | 0.866 | 5 1/8 | 5 3/4 | 7 5/8 | 1 21/32 | 2 17/32 | 2 15/16 | 4 11/16 | 3.063 | 1.219 |
| **2 3/8** | **UELT212-206D1W3** | | | | | | | | | | | | | | | | |
| **2 7/16** | **UELT212-207D1W3** | | | | | | | | | | | | | | | | |
| **65** | **UELT213D1W3** | 32 | 23 | 111 | 70 | 41 | 121 | 26 | 151 | 167 | 224 | 44 | 70 | 87 | 137 | 85.7 | 34.15 |
| **2 1/2** | **UELT213-208D1W3** | 1 1/4 | 29/32 | 4 3/8 | 2 3/4 | 1 5/8 | 4 3/4 | 1.024 | 5 15/16 | 6 9/16 | 8 13/16 | 1 23/32 | 2 3/4 | 3 7/16 | 5 13/32 | 3.374 | 1.344 |
| **2 9/16** | **UELT213-209D1W3** | | | | | | | | | | | | | | | | |
| **70** | **UELT214D1W3** | 32 | 23 | 111 | 70 | 41 | 121 | 26 | 151 | 167 | 224 | 46 | 70 | 87 | 137 | 85.7 | 34.15 |
| **2 5/8** | **UELT214-210D1W3** | | | | | | | | | | | | | | | | |
| **2 11/16** | **UELT214-211D1W3** | 1 1/4 | 29/32 | 4 3/8 | 2 3/4 | 1 5/8 | 4 3/4 | 1.024 | 5 15/16 | 6 9/16 | 8 13/16 | 1 13/16 | 2 3/4 | 3 7/16 | 5 13/32 | 3.374 | 1.344 |
| **2 3/4** | **UELT214-212D1W3** | | | | | | | | | | | | | | | | |
| **75** | **UELT215D1W3** | 32 | 23 | 111 | 70 | 41 | 121 | 26 | 151 | 167 | 232 | 48 | 70 | 92 | 140 | 92 | 37.3 |
| **2 13/16** | **UELT215-213D1W3** | | | | | | | | | | | | | | | | |
| **2 7/8** | **UELT215-214D1W3** | 1 1/4 | 29/32 | 4 3/8 | 2 3/4 | 1 5/8 | 4 3/4 | 1.024 | 5 15/16 | 6 9/16 | 9 1/8 | 1 7/8 | 2 3/4 | 3 5/8 | 5 1/2 | 3.622 | 1.469 |
| **2 15/16** | **UELT215-215D1W3** | | | | | | | | | | | | | | | | |
| **3** | **UELT215-300D1W3** | | | | | | | | | | | | | | | | |

Remarks: 1) These numbers indicate relubricatable type. If maintenance free type is needed, please order without suffix "D1".
Note: Please refer to page 36 for size of grease fitting.

| Bearing number | Housing [1)] number | Mass of unit kg | lb |
|---|---|---|---|
| UEL211D1W3 | T211D1 | 4.2 | |
| UEL211-200D1W3 | T211D1 | | |
| UEL211-201D1W3 | T211D1 | 9.3 | |
| UEL211-202D1W3 | T211D1 | | |
| UEL211-203D1W3 | T211D1 | | |
| UEL212D1W3 | T212D1 | 5.2 | |
| UEL212-204D1W3 | T212D1 | | |
| UEL212-205D1W3 | T212D1 | 11 | |
| UEL212-206D1W3 | T212D1 | | |
| UEL212-207D1W3 | T212D1 | | |
| UEL213D1W3 | T213D1 | 7.7 | |
| UEL213-208D1W3 | T213D1 | 17 | |
| UEL213-209D1W3 | T213D1 | | |
| UEL214D1W3 | T214D1 | 7.3 | |
| UEL214-210D1W3 | T214D1 | | |
| UEL214-211D1W3 | T214D1 | 16 | |
| UEL214-212D1W3 | T214D1 | | |
| UEL215D1W3 | T215D1 | 7.8 | |
| UEL215-213D1W3 | T215D1 | | |
| UEL215-214D1W3 | T215D1 | 17 | |
| UEL215-215D1W3 | T215D1 | | |
| UEL215-300D1W3 | T215D1 | | |

## Take-up units cast housing
## Eccentric locking collar type

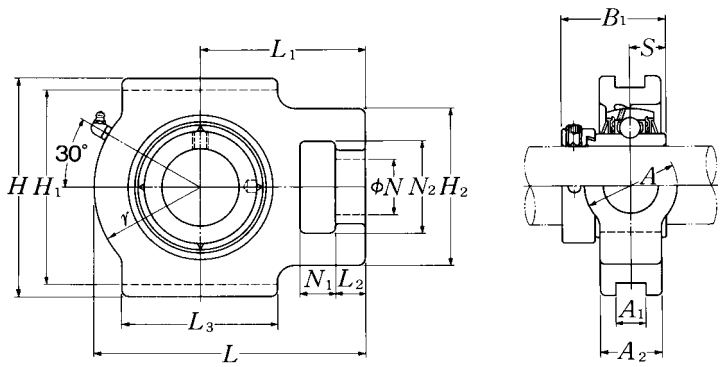


| Shaft dia. mm / inch | Unit number [1] | Nominal dimensions (mm / inch) | | | | | | | | | | | | | | | |
|---|---|---|---|---|---|---|---|---|---|---|---|---|---|---|---|---|---|
| | | $N_1$ | $L_2$ | $H_2$ | $N_2$ | $N$ | $L_3$ | $A_1$ | $H_1$ | $H$ | $L$ | $A_2$ | $A$ | $r$ | $L_1$ | $B_1$ | $S$ |
| 25 | UELT305D1W3 | 16 | 14 | 62 | 36 | 26 | 65 | 12 | 80 | 89 | 122 | 26 | 36 | 46 | 76 | 46.8 | 16.7 |
| 13/16 | UELT305-013D1W3 | | | | | | | | | | | | | | | | |
| 7/8 | UELT305-014D1W3 | 5/8 | 9/16 | 2 7/16 | 1 13/32 | 1 1/32 | 2 9/16 | 0.472 | 3 5/32 | 3 1/2 | 4 13/16 | 1 1/32 | 1 13/32 | 1 13/16 | 3 | 1.843 | 0.657 |
| 15/16 | UELT305-015D1W3 | | | | | | | | | | | | | | | | |
| 1 | UELT305-100D1W3 | | | | | | | | | | | | | | | | |
| 30 | UELT306D1W3 | 18 | 16 | 70 | 41 | 28 | 74 | 16 | 90 | 100 | 137 | 28 | 41 | 52 | 85 | 50 | 17.5 |
| 1 1/16 | UELT306-101D1W3 | | | | | | | | | | | | | | | | |
| 1 1/8 | UELT306-102D1W3 | 23/32 | 5/8 | 2 3/4 | 1 5/8 | 1 3/32 | 2 29/32 | 0.630 | 3 35/64 | 3 15/16 | 5 13/32 | 1 3/32 | 1 5/8 | 2 1/16 | 3 11/32 | 1.969 | 0.689 |
| 1 3/16 | UELT306-103D1W3 | | | | | | | | | | | | | | | | |
| 35 | UELT307D1W3 | 20 | 17 | 75 | 45 | 30 | 80 | 16 | 100 | 111 | 150 | 32 | 45 | 56 | 94 | 51.6 | 18.3 |
| 1 1/4 | UELT307-104D1W3 | | | | | | | | | | | | | | | | |
| 1 5/16 | UELT307-105D1W3 | 25/32 | 21/32 | 2 15/16 | 1 25/32 | 1 3/16 | 3 5/32 | 0.630 | 3 15/16 | 4 3/8 | 5 29/32 | 1 1/4 | 1 25/32 | 2 7/32 | 3 11/16 | 2.031 | 0.720 |
| 1 3/8 | UELT307-106D1W3 | | | | | | | | | | | | | | | | |
| 1 7/16 | UELT307-107D1W3 | | | | | | | | | | | | | | | | |
| 40 | UELT308D1W3 | 22 | 19 | 83 | 50 | 32 | 89 | 18 | 112 | 124 | 162 | 34 | 50 | 62 | 100 | 57.1 | 19.8 |
| 1 1/2 | UELT308-108D1W3 | 7/8 | 3/4 | 3 9/32 | 1 31/32 | 1 1/4 | 3 1/2 | 0.709 | 4 13/32 | 4 7/8 | 6 3/8 | 1 11/32 | 1 31/32 | 2 7/16 | 3 15/16 | 2.248 | 0.780 |
| 1 9/16 | UELT308-109D1W3 | | | | | | | | | | | | | | | | |
| 45 | UELT309D1W3 | 24 | 20 | 90 | 55 | 34 | 97 | 18 | 125 | 138 | 178 | 38 | 55 | 68 | 110 | 58.7 | 19.8 |
| 1 5/8 | UELT309-110D1W3 | | | | | | | | | | | | | | | | |
| 1 11/16 | UELT309-111D1W3 | 15/16 | 25/32 | 3 17/32 | 2 5/32 | 1 11/32 | 3 13/16 | 0.709 | 4 59/64 | 5 7/16 | 7 | 1 1/2 | 2 5/32 | 2 11/16 | 4 11/32 | 2.311 | 0.780 |
| 1 3/4 | UELT309-112D1W3 | | | | | | | | | | | | | | | | |
| 50 | UELT310D1W3 | 27 | 22 | 98 | 61 | 37 | 106 | 20 | 140 | 151 | 192 | 40 | 61 | 74 | 118 | 66.6 | 24.6 |
| 1 13/16 | UELT310-113D1W3 | | | | | | | | | | | | | | | | |
| 1 7/8 | UELT310-114D1W3 | 1 1/16 | 7/8 | 3 27/32 | 2 13/32 | 1 15/32 | 4 3/16 | 0.787 | 5 33/64 | 5 15/16 | 7 9/16 | 1 9/16 | 2 13/32 | 2 29/32 | 4 21/32 | 2.622 | 0.969 |
| 1 15/16 | UELT310-115D1W3 | | | | | | | | | | | | | | | | |
| 55 | UELT311D1W3 | 29 | 23 | 105 | 66 | 39 | 115 | 22 | 150 | 163 | 207 | 44 | 66 | 80 | 127 | 73 | 27.8 |
| 2 | UELT311-200D1W3 | | | | | | | | | | | | | | | | |
| 2 1/16 | UELT311-201D1W3 | 1 5/32 | 29/32 | 4 1/8 | 2 19/32 | 1 17/32 | 4 17/32 | 0.866 | 5 29/32 | 6 13/32 | 8 5/32 | 1 23/32 | 2 19/32 | 3 5/32 | 5 | 2.874 | 1.094 |
| 2 1/8 | UELT311-202D1W3 | | | | | | | | | | | | | | | | |
| 2 3/16 | UELT311-203D1W3 | | | | | | | | | | | | | | | | |

Remarks: 1) These numbers indicate relubricatable type. If maintenance free type is needed, please order without suffix "D1".
Note: Please refer to page 36 for size of grease fitting.

| Bearing number | Housing [1)] number | Mass of unit kg | lb |
|---|---|---|---|
| UEL305D1W3 | T305D1 | 1.4 | |
| UEL305-013D1W3 | T305D1 | | |
| UEL305-014D1W3 | T305D1 | 3.1 | |
| UEL305-015D1W3 | T305D1 | | |
| UEL305-100D1W3 | T305D1 | | |
| UEL306D1W3 | T306D1 | 1.9 | |
| UEL306-101D1W3 | T306D1 | | |
| UEL306-102D1W3 | T306D1 | 4.2 | |
| UEL306-103D1W3 | T306D1 | | |
| UEL307D1W3 | T307D1 | 2.4 | |
| UEL307-104D1W3 | T307D1 | | |
| UEL307-105D1W3 | T307D1 | 5.3 | |
| UEL307-106D1W3 | T307D1 | | |
| UEL307-107D1W3 | T307D1 | | |
| UEL308D1W3 | T308D1 | 3.1 | |
| UEL308-108D1W3 | T308D1 | 6.8 | |
| UEL308-109D1W3 | T308D1 | | |
| UEL309D1W3 | T309D1 | 4.1 | |
| UEL309-110D1W3 | T309D1 | | |
| UEL309-111D1W3 | T309D1 | 9.0 | |
| UEL309-112D1W3 | T309D1 | | |
| UEL310D1W3 | T310D1 | 5.2 | |
| UEL310-113D1W3 | T310D1 | | |
| UEL310-114D1W3 | T310D1 | 11 | |
| UEL310-115D1W3 | T310D1 | | |
| UEL311D1W3 | T311D1 | 6.6 | |
| UEL311-200D1W3 | T311D1 | | |
| UEL311-201D1W3 | T311D1 | 15 | |
| UEL311-202D1W3 | T311D1 | | |
| UEL311-203D1W3 | T311D1 | | |

## Take-up units cast housing
## Eccentric locking collar type

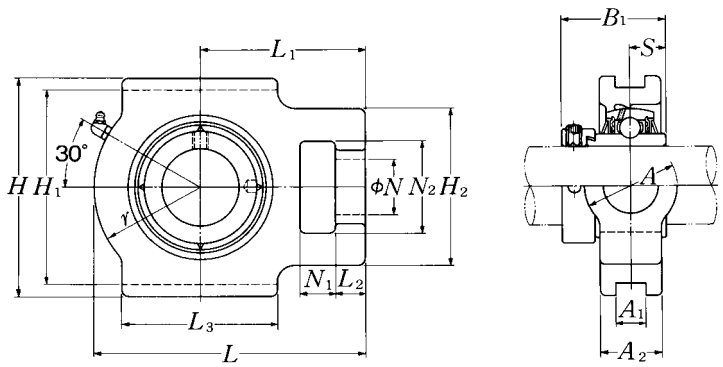


| Shaft dia. mm / inch | Unit number 1) | Nominal dimensions | | | | | | | | | | | | | | | |
|---|---|---|---|---|---|---|---|---|---|---|---|---|---|---|---|---|---|
| | | mm | | | | | | | | inch | | | | | | | |
| | | $N_1$ | $L_2$ | $H_2$ | $N_2$ | $N$ | $L_3$ | $A_1$ | $H_1$ | $H$ | $L$ | $A_2$ | $A$ | $r$ | $L_1$ | $B_1$ | $S$ |
| 60 | UELT312D1W3 | 31 | 25 | 113 | 71 | 41 | 123 | 22 | 160 | 178 | 220 | 46 | 71 | 85 | 135 | 79.4 | 30.95 |
| 2 1/4 | UELT312-204D1W3 | | | | | | | | | | | | | | | | |
| 2 5/16 | UELT312-205D1W3 | 1 7/32 | 31/32 | 4 7/16 | 2 25/32 | 1 5/8 | 4 27/32 | 0.866 | 6 19/64 | 7 | 8 21/32 | 1 13/16 | 2 25/32 | 3 11/32 | 5 5/16 | 3.126 | 1.219 |
| 2 3/8 | UELT312-206D1W3 | | | | | | | | | | | | | | | | |
| 2 7/16 | UELT312-207D1W3 | | | | | | | | | | | | | | | | |
| 65 | UELT313D1W3 | 32 | 27 | 116 | 70 | 43 | 134 | 26 | 170 | 190 | 238 | 50 | 80 | 92 | 146 | 85.7 | 32.55 |
| 2 1/2 | UELT313-208D1W3 | 1 1/4 | 1 1/16 | 4 9/16 | 2 3/4 | 1 11/16 | 5 9/32 | 1.024 | 6 11/16 | 7 15/32 | 9 3/8 | 1 31/32 | 3 5/32 | 3 5/8 | 5 3/4 | 3.374 | 1.281 |
| 2 9/16 | UELT313-209D1W3 | | | | | | | | | | | | | | | | |
| 70 | UELT314D1W3 | 36 | 27 | 130 | 85 | 46 | 140 | 26 | 180 | 202 | 252 | 52 | 90 | 97 | 155 | 92.1 | 34.15 |
| 2 5/8 | UELT314-210D1W3 | | | | | | | | | | | | | | | | |
| 2 11/16 | UELT314-211D1W3 | 1 13/32 | 1 1/16 | 5 1/8 | 3 11/32 | 1 13/16 | 5 1/2 | 1.024 | 7 3/32 | 7 15/16 | 9 29/32 | 2 1/16 | 3 17/32 | 3 13/16 | 6 3/32 | 3.626 | 1.344 |
| 2 3/4 | UELT314-212D1W3 | | | | | | | | | | | | | | | | |
| 75 | UELT315D1W3 | 36 | 27 | 132 | 85 | 46 | 150 | 26 | 192 | 216 | 262 | 55 | 90 | 102 | 160 | 100 | 37.3 |
| 2 13/16 | UELT315-213D1W3 | | | | | | | | | | | | | | | | |
| 2 7/8 | UELT315-214D1W3 | 1 13/32 | 1 1/16 | 5 3/16 | 3 11/32 | 1 13/16 | 5 29/32 | 1.024 | 7 9/16 | 8 1/2 | 10 5/16 | 2 5/32 | 3 17/32 | 4 1/32 | 6 5/16 | 3.937 | 1.469 |
| 2 15/16 | UELT315-215D1W3 | | | | | | | | | | | | | | | | |
| 3 | UELT315-300D1W3 | | | | | | | | | | | | | | | | |
| 80 | UELT316D1W3 | 42 | 30 | 150 | 98 | 53 | 160 | 30 | 204 | 230 | 282 | 60 | 102 | 108 | 174 | 106.4 | 40.5 |
| 3 1/16 | UELT316-301D1W3 | | | | | | | | | | | | | | | | |
| 3 1/8 | UELT316-302D1W3 | 1 21/32 | 1 3/16 | 5 29/32 | 3 27/32 | 2 3/32 | 6 5/16 | 1.181 | 8 1/32 | 9 1/16 | 11 3/32 | 2 3/8 | 4 1/32 | 4 1/4 | 6 27/32 | 4.189 | 1.594 |
| 3 3/16 | UELT316-303D1W3 | | | | | | | | | | | | | | | | |
| 85 | UELT317D1W3 | 42 | 32 | 152 | 98 | 53 | 170 | 32 | 214 | 240 | 298 | 64 | 102 | 115 | 183 | 109.5 | 42.05 |
| 3 1/4 | UELT317-304D1W3 | | | | | | | | | | | | | | | | |
| 3 5/16 | UELT317-305D1W3 | 1 21/32 | 1 1/4 | 5 31/32 | 3 27/32 | 2 3/32 | 6 11/16 | 1.260 | 8 27/64 | 9 7/16 | 11 23/32 | 2 17/32 | 4 1/32 | 4 17/32 | 7 7/32 | 4.311 | 1.656 |
| 3 7/16 | UELT317-307D1W3 | | | | | | | | | | | | | | | | |
| 90 | UELT318D1W3 | 46 | 32 | 160 | 106 | 57 | 175 | 32 | 228 | 255 | 312 | 66 | 110 | 120 | 192 | 115.9 | 43.65 |
| 3 7/16 | UELT318-307D1W3 | 1 13/16 | 1 1/4 | 6 5/16 | 4 3/16 | 2 1/4 | 6 7/8 | 1.260 | 8 31/32 | 10 1/32 | 12 9/32 | 2 19/32 | 4 11/32 | 4 23/32 | 7 9/16 | 4.563 | 1.719 |
| 3 1/2 | UELT318-308D1W3 | | | | | | | | | | | | | | | | |

Remarks: 1) These numbers indicate relubricatable type. If maintenance free type is needed, please order without suffix "D1".
Note: Please refer to page 36 for size of grease fitting.

| Bearing number | Housing [1)] number | Mass of unit kg lb |
|---|---|---|
| UEL312D1W3 | T312D1 | 7.9 |
| UEL312-204D1W3 | T312D1 | |
| UEL312-205D1W3 | T312D1 | 17 |
| UEL312-206D1W3 | T312D1 | |
| UEL312-207D1W3 | T312D1 | |
| UEL313D1W3 | T313D1 | 9.8 |
| UEL313-208D1W3 | T313D1 | 22 |
| UEL313-209D1W3 | T313D1 | |
| UEL314D1W3 | T314D1 | 11 |
| UEL314-210D1W3 | T314D1 | |
| UEL314-211D1W3 | T314D1 | 24 |
| UEL314-212D1W3 | T314D1 | |
| UEL315D1W3 | T315D1 | 14 |
| UEL315-213D1W3 | T315D1 | |
| UEL315-214D1W3 | T315D1 | 31 |
| UEL315-215D1W3 | T315D1 | |
| UEL315-300D1W3 | T315D1 | |
| UEL316D1W3 | T316D1 | 17 |
| UEL316-301D1W3 | T316D1 | |
| UEL316-302D1W3 | T316D1 | 37 |
| UEL316-303D1W3 | T316D1 | |
| UEL317D1W3 | T317D1 | 20 |
| UEL317-304D1W3 | T317D1 | |
| UEL317-305D1W3 | T317D1 | 44 |
| UEL317-307D1W3 | T317D1 | |
| UEL318D1W3 | T318D1 | 23 |
| UEL318-307D1W3 | T318D1 | 51 |
| UEL318-308D1W3 | T318D1 | |

## Take-up units cast housing
## Eccentric locking collar type

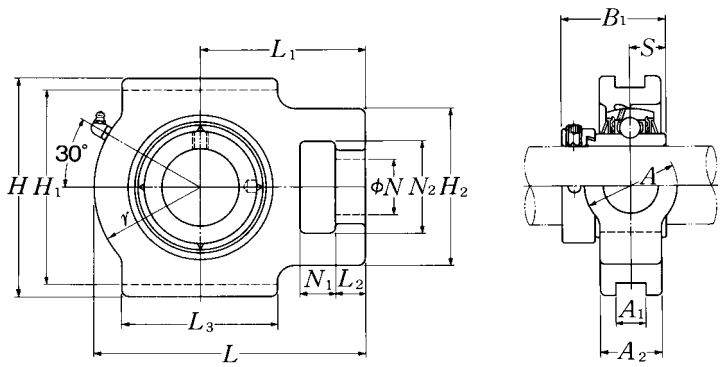


| Shaft dia. mm / inch | Unit number 1) | Nominal dimensions | | | | | | | | | | | | | | | |
|---|---|---|---|---|---|---|---|---|---|---|---|---|---|---|---|---|---|
| | | mm | | | | | | | | inch | | | | | | | |
| | | $N_1$ | $L_2$ | $H_2$ | $N_2$ | $N$ | $L_3$ | $A_1$ | $H_1$ | $H$ | $L$ | $A_2$ | $A$ | $r$ | $L_1$ | $B_1$ | $S$ |
| **95** | **UELT319D1W3** | 46 | 33 | 165 | 106 | 57 | 180 | 35 | 240 | 270 | 322 | 72 | 110 | 125 | 197 | 122.3 | 38.9 |
| **3 5/8** | **UELT319-310D1W3** | | | | | | | | | | | | | | | | |
| **3 11/16** | **UELT319-311D1W3** | 1 13/16 | 1 5/16 | 6 1/2 | 4 3/16 | 2 1/4 | 7 3/32 | 1.378 | 9 29/64 | 10 5/8 | 12 11/16 | 2 27/32 | 4 11/32 | 4 29/32 | 7 3/4 | 4.815 | 1.531 |
| **3 3/4** | **UELT319-312D1W3** | | | | | | | | | | | | | | | | |
| **100** | **UELT320D1W3** | 48 | 34 | 175 | 115 | 59 | 200 | 35 | 260 | 290 | 345 | 75 | 120 | 135 | 210 | 128.6 | 50 |
| **3 13/16** | **UELT320-313D1W3** | | | | | | | | | | | | | | | | |
| **3 7/8** | **UELT320-314D1W3** | 1 7/8 | 1 11/32 | 6 7/8 | 4 17/32 | 2 5/16 | 7 7/8 | 1.378 | 10 15/64 | 11 13/32 | 13 19/32 | 2 15/16 | 4 23/32 | 5 5/16 | 8 9/32 | 5.063 | 1.969 |
| **3 15/16** | **UELT320-315D1W3** | | | | | | | | | | | | | | | | |
| **4** | **UELT320-400D1W3** | | | | | | | | | | | | | | | | |
| **105** | **UELT321D1W3** | 48 | 34 | 175 | 115 | 59 | 200 | 35 | 260 | 290 | 347 | 75 | 120 | 135 | 212 | 139.7 | 48.4 |
| **110** | **UELT322D1W3** | 52 | 40 | 185 | 125 | 65 | 215 | 38 | 285 | 320 | 385 | 80 | 130 | 150 | 235 | 141.3 | 49.2 |

Remarks: 1) These numbers indicate relubricatable type. If maintenance free type is needed, please order without suffix "D1".
Note: Please refer to page 36 for size of grease fitting.

| Bearing number | Housing [1)] number | Mass of unit kg lb |
|---|---|---|
| UEL319D1W3 | T319D1 | 26 |
| UEL319-310D1W3 | T319D1 | |
| UEL319-311D1W3 | T319D1 | 57 |
| UEL319-312D1W3 | T319D1 | |
| UEL320D1W3 | T320D1 | 32 |
| UEL320-313D1W3 | T320D1 | |
| UEL320-314D1W3 | T320D1 | 71 |
| UEL320-315D1W3 | T320D1 | |
| UEL320-400D1W3 | T320D1 | |
| UEL321D1D1W3 | T321D1 | 33 |
| UEL322D1D1W3 | T322D1 | 42 |

## Cartridge units cast housing
## Eccentric locking collar type

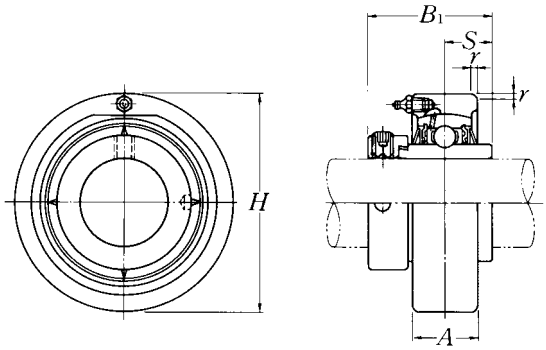


| Shaft dia. mm / inch | Unit number 1) | Nominal dimensions mm / inch H | A | r | B1 | S | Bearing number | Housing 1) number | Mass of unit kg / lb |
|---|---|---|---|---|---|---|---|---|---|
| 20 | UELC204D1W3 | 72 | 20 | 2 | 43.7 | 17.1 | UEL204D1W3 | C204D1 | 0.6 |
| 3/4 | UELC204-012D1W3 | 2.8346 | 25/32 | 0.079 | 1.720 | 0.673 | UEL204-012D1W3 | C204D1 | 1.3 |
| 25 | UELC205D1W3 | 80 | 22 | 2 | 44.4 | 17.45 | UEL205D1W3 | C205D1 | 0.7 |
| 13/16 | UELC205-013D1W3 | | | | | | UEL205-013D1W3 | C205D1 | |
| 7/8 | UELC205-014D1W3 | 3.1496 | 55/64 | 0.079 | 1.748 | 0.687 | UEL205-014D1W3 | C205D1 | 1.5 |
| 15/16 | UELC205-015D1W3 | | | | | | UEL205-015D1W3 | C205D1 | |
| 1 | UELC205-100D1W3 | | | | | | UEL205-100D1W3 | C205D1 | |
| 30 | UELC206D1W3 | 85 | 27 | 2 | 48.4 | 18.25 | UEL206D1W3 | C206D1 | 0.9 |
| 1 1/16 | UELC206-101D1W3 | | | | | | UEL206-101D1W3 | C206D1 | |
| 1 1/8 | UELC206-102D1W3 | 3.3465 | 1 1/16 | 0.079 | 1.906 | 0.719 | UEL206-102D1W3 | C206D1 | 2.0 |
| 1 3/16 | UELC206-103D1W3 | | | | | | UEL206-103D1W3 | C206D1 | |
| 1 1/4 | UELC206-104D1W3 | | | | | | UEL206-104D1W3 | C206D1 | |
| 35 | UELC207D1W3 | 90 | 28 | 2 | 51.1 | 18.8 | UEL207D1W3 | C207D1 | 1.0 |
| 1 1/4 | UELC207-104D1W3 | | | | | | UEL207-104D1W3 | C207D1 | |
| 1 5/16 | UELC207-105D1W3 | 3.5433 | 1 7/64 | 0.079 | 2.012 | 0.740 | UEL207-105D1W3 | C207D1 | 2.2 |
| 1 3/8 | UELC207-106D1W3 | | | | | | UEL207-106D1W3 | C207D1 | |
| 1 7/16 | UELC207-107D1W3 | | | | | | UEL207-107D1W3 | C207D1 | |
| 40 | UELC208D1W3 | 100 | 30 | 2.5 | 56.3 | 21.4 | UEL208D1W3 | C208D1 | 1.4 |
| 1 1/2 | UELC208-108D1W3 | 3.9370 | 1 3/16 | 0.098 | 2.217 | 0.843 | UEL208-108D1W3 | C208D1 | 3.1 |
| 1 9/16 | UELC208-109D1W3 | | | | | | UEL208-109D1W3 | C208D1 | |
| 45 | UELC209D1W3 | 110 | 31 | 2.5 | 56.3 | 21.4 | UEL209D1W3 | C209D1 | 1.6 |
| 1 5/8 | UELC209-110D1W3 | | | | | | UEL209-110D1W3 | C209D1 | |
| 1 11/16 | UELC209-111D1W3 | 4.3307 | 1 7/32 | 0.098 | 2.217 | 0.843 | UEL209-111D1W3 | C209D1 | 3.5 |
| 1 3/4 | UELC209-112D1W3 | | | | | | UEL209-112D1W3 | C209D1 | |
| 50 | UELC210D1W3 | 120 | 33 | 2.5 | 62.7 | 24.6 | UEL210D1W3 | C210D1 | 2.1 |
| 1 13/16 | UELC210-113D1W3 | | | | | | UEL210-113D1W3 | C210D1 | |
| 1 7/8 | UELC210-114D1W3 | 4.7244 | 1 19/64 | 0.098 | 2.469 | 0.969 | UEL210-114D1W3 | C210D1 | 4.6 |
| 1 15/16 | UELC210-115D1W3 | | | | | | UEL210-115D1W3 | C210D1 | |
| 2 | UELC210-200D1W3 | | | | | | UEL210-200D1W3 | C210D1 | |

Remarks: 1) These numbers indicate relubricatable type. If maintenance free type is needed, please order without suffix "D1".
Note: Please refer to page 36 for size of grease fitting.

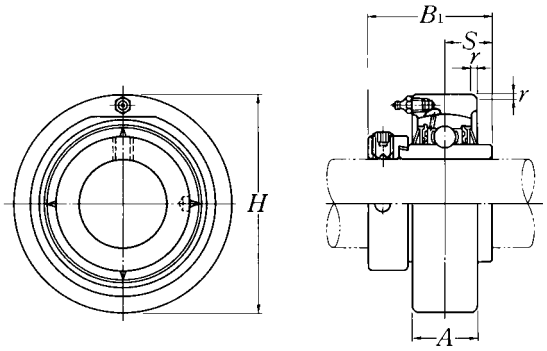


| Shaft dia. mm inch | Unit number 1) | Nominal dimensions mm inch H | A | r | B1 | S | Bearing number | Housing 1) number | Mass of unit kg lb |
|---|---|---|---|---|---|---|---|---|---|
| 55 | UELC211D1W3 | 125 | 35 | 2.5 | 71.4 | 27.75 | UEL211D1W3 | C211D1 | 2.4 |
| 2 | UELC211-200D1W3 | | | | | | UEL211-200D1W3 | C211D1 | |
| 2 1/16 | UELC211-201D1W3 | 4.9213 | 1 3/8 | 0.098 | 2.811 | 1.093 | UEL211-201D1W3 | C211D1 | 5.3 |
| 2 1/8 | UELC211-202D1W3 | | | | | | UEL211-202D1W3 | C211D1 | |
| 2 3/16 | UELC211-203D1W3 | | | | | | UEL211-203D1W3 | C211D1 | |
| 60 | UELC212D1W3 | 130 | 38 | 2.5 | 77.8 | 30.95 | UEL212D1W3 | C212D1 | 2.8 |
| 2 1/4 | UELC212-204D1W3 | | | | | | UEL212-204D1W3 | C212D1 | |
| 2 5/16 | UELC212-205D1W3 | 5.1181 | 1 1/2 | 0.098 | 3.063 | 1.219 | UEL212-205D1W3 | C212D1 | 6.2 |
| 2 3/8 | UELC212-206D1W3 | | | | | | UEL212-206D1W3 | C212D1 | |
| 2 7/16 | UELC212-207D1W3 | | | | | | UEL212-207D1W3 | C212D1 | |

Remarks: 1) These numbers indicate relubricatable type. If maintenance free type is needed, please order without suffix "D1".
Note: Please refer to page 36 for size of grease fitting.

## Cartridge units cast housing
## Eccentric locking collar type

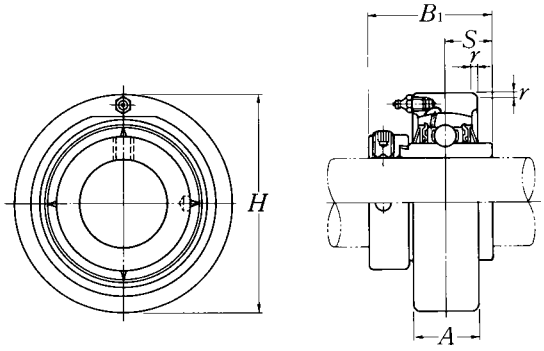


| Shaft dia. mm / inch | Unit number 1) | Nominal dimensions mm / inch H | A | r | B1 | S | Bearing number | Housing 1) number | Mass of unit kg / lb |
|---|---|---|---|---|---|---|---|---|---|
| 25 | UELC305D1W3 | 90 | 26 | 2.5 | 46.8 | 16.7 | UEL305D1W3 | C305D1 | 1.0 |
| 13/16 | UELC305-013D1W3 | | | | | | UEL305-013D1W3 | C305D1 | |
| 7/8 | UELC305-014D1W3 | 3.5433 | 1 1/32 | 0.098 | 1.843 | 0.657 | UEL305-014D1W3 | C305D1 | 2.4 |
| 15/16 | UELC305-015D1W3 | | | | | | UEL305-015D1W3 | C305D1 | |
| 1 | UELC305-100D1W3 | | | | | | UEL305-100D1W3 | C305D1 | |
| 30 | UELC306D1W3 | 100 | 28 | 2.5 | 50 | 17.5 | UEL306D1W3 | C306D1 | 1.4 |
| 1 1/16 | UELC306-101D1W3 | | | | | | UEL306-101D1W3 | C306D1 | |
| 1 1/8 | UELC306-102D1W3 | 3.9370 | 1 7/64 | 0.098 | 1.969 | 0.689 | UEL306-102D1W3 | C306D1 | 3.3 |
| 1 3/16 | UELC306-103D1W3 | | | | | | UEL306-103D1W3 | C306D1 | |
| 35 | UELC307D1W3 | 110 | 32 | 3 | 51.6 | 18.3 | UEL307D1W3 | C307D1 | 1.8 |
| 1 1/4 | UELC307-104D1W3 | | | | | | UEL307-104D1W3 | C307D1 | |
| 1 5/16 | UELC307-105D1W3 | 4.3307 | 1 17/64 | 0.118 | 2.031 | 0.720 | UEL307-105D1W3 | C307D1 | 4.0 |
| 1 3/8 | UELC307-106D1W3 | | | | | | UEL307-106D1W3 | C307D1 | |
| 1 7/16 | UELC307-107D1W3 | | | | | | UEL307-107D1W3 | C307D1 | |
| 40 | UELC308D1W3 | 120 | 34 | 3 | 57.1 | 19.8 | UEL308D1W3 | C308D1 | 2.3 |
| 1 1/2 | UELC308-108D1W3 | 4.7244 | 1 11/32 | 0.118 | 2.248 | 0.780 | UEL308-108D1W3 | C308D1 | 5.1 |
| 1 9/16 | UELC308-109D1W3 | | | | | | UEL308-109D1W3 | C308D1 | |
| 45 | UELC309D1W3 | 130 | 38 | 3.5 | 58.7 | 19.8 | UEL309D1W3 | C309D1 | 2.9 |
| 1 5/8 | UELC309-110D1W3 | | | | | | UEL309-110D1W3 | C309D1 | |
| 1 11/16 | UELC309-111D1W3 | 5.1181 | 1 1/2 | 0.138 | 2.311 | 0.780 | UEL309-111D1W3 | C309D1 | 6.4 |
| 1 3/4 | UELC309-112D1W3 | | | | | | UEL309-112D1W3 | C309D1 | |
| 50 | UELC310D1W3 | 140 | 40 | 3.5 | 66.6 | 24.6 | UEL310D1W3 | C310D1 | 3.5 |
| 1 13/16 | UELC310-113D1W3 | | | | | | UEL310-113D1W3 | C310D1 | |
| 1 7/8 | UELC310-114D1W3 | 5.5118 | 1 37/64 | 0.138 | 2.622 | 0.969 | UEL310-114D1W3 | C310D1 | 7.7 |
| 1 15/16 | UELC310-115D1W3 | | | | | | UEL310-115D1W3 | C310D1 | |
| 55 | UELC311D1W3 | 150 | 44 | 3.5 | 73 | 27.8 | UEL311D1W3 | C311D1 | 4.3 |
| 2 | UELC311-200D1W3 | | | | | | UEL311-200D1W3 | C311D1 | |
| 2 1/16 | UELC311-201D1W3 | 5.9055 | 1 47/64 | 0.138 | 2.874 | 1.094 | UEL311-201D1W3 | C311D1 | 9.3 |
| 2 1/8 | UELC311-202D1W3 | | | | | | UEL311-202D1W3 | C311D1 | |
| 2 3/16 | UELC311-203D1W3 | | | | | | UEL311-203D1W3 | C311D1 | |

Remarks: 1) These numbers indicate relubricatable type. If maintenance free type is needed, please order without suffix "D1".
Note: Please refer to page 36 for size of grease fitting.

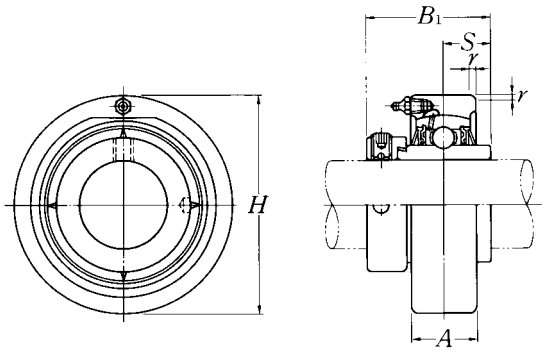


| Shaft dia. mm / inch | Unit number 1) | Nominal dimensions mm / inch H | A | r | B1 | S | Bearing number | Housing 1) number | Mass of unit kg / lb |
|---|---|---|---|---|---|---|---|---|---|
| 60 | UELC312D1W3 | 160 | 46 | 3.5 | 79.4 | 30.95 | UEL312D1W3 | C312D1 | 5.1 |
| 2 1/4 | UELC312-204D1W3 | | | | | | UEL312-204D1W3 | C312D1 | |
| 2 5/16 | UELC312-205D1W3 | 6.2992 | 1 13/16 | 0.138 | 3.126 | 1.219 | UEL312-205D1W3 | C312D1 | 11 |
| 2 3/8 | UELC312-206D1W3 | | | | | | UEL312-206D1W3 | C312D1 | |
| 2 7/16 | UELC312-207D1W3 | | | | | | UEL312-207D1W3 | C312D1 | |
| 65 | UELC313D1W3 | 170 | 50 | 3.5 | 85.7 | 32.55 | UEL313D1W3 | C313D1 | 6.2 |
| 2 1/2 | UELC313-208D1W3 | 6.6929 | 1 31/32 | 0.138 | 3.374 | 1.281 | UEL313-208D1W3 | C313D1 | 14 |
| 2 9/16 | UELC313-209D1W3 | | | | | | UEL313-209D1W3 | C313D1 | |
| 70 | UELC314D1W3 | 180 | 52 | 4 | 92.1 | 34.15 | UEL314D1W3 | C314D1 | 7.3 |
| 2 5/8 | UELC314-210D1W3 | | | | | | UEL314-210D1W3 | C314D1 | |
| 2 11/16 | UELC314-211D1W3 | 7.0866 | 2 3/64 | 0.157 | 3.626 | 1.344 | UEL314-211D1W3 | C314D1 | 16 |
| 2 3/4 | UELC314-212D1W3 | | | | | | UEL314-212D1W3 | C314D1 | |
| 75 | UELC315D1W3 | 190 | 55 | 4 | 100 | 37.3 | UEL315D1W3 | C315D1 | 8.5 |
| 2 13/16 | UELC315-213D1W3 | | | | | | UEL315-213D1W3 | C315D1 | |
| 2 7/8 | UELC315-214D1W3 | 7.4803 | 2 11/64 | 0.157 | 3.937 | 1.469 | UEL315-214D1W3 | C315D1 | 19 |
| 2 15/16 | UELC315-215D1W3 | | | | | | UEL315-215D1W3 | C315D1 | |
| 3 | UELC315-300D1W3 | | | | | | UEL315-300D1W3 | C315D1 | |
| 80 | UELC316D1W3 | 200 | 60 | 4 | 106.4 | 40.5 | UEL316D1W3 | C316D1 | 10 |
| 3 1/16 | UELC316-301D1W3 | | | | | | UEL316-301D1W3 | C316D1 | |
| 3 1/8 | UELC316-302D1W3 | 7.8740 | 2 23/64 | 0.157 | 4.189 | 1.594 | UEL316-302D1W3 | C316D1 | 22 |
| 3 3/16 | UELC316-303D1W3 | | | | | | UEL316-303D1W3 | C316D1 | |
| 85 | UELC317D1W3 | 215 | 64 | 4 | 109.5 | 42.05 | UEL317D1W3 | C317D1 | 13 |
| 3 1/4 | UELC317-304D1W3 | | | | | | UEL317-304D1W3 | C317D1 | |
| 3 5/16 | UELC317-305D1W3 | 8.4646 | 2 33/64 | 0.157 | 4.311 | 1.656 | UEL317-305D1W3 | C317D1 | 29 |
| 3 7/16 | UELC317-307D1W3 | | | | | | UEL317-307D1W3 | C317D1 | |
| 90 | UELC318D1W3 | 225 | 66 | 4 | 115.9 | 43.65 | UEL318D1W3 | C318D1 | 14 |
| 3 7/16 | UELC318-307D1W3 | 8.8583 | 2 19/32 | 0.157 | 4.563 | 1.719 | UEL318-307D1W3 | C318D1 | 31 |
| 3 1/2 | UELC318-308D1W3 | | | | | | UEL318-308D1W3 | C318D1 | |

Remarks: 1) These numbers indicate relubricatable type. If maintenance free type is needed, please order without suffix "D1".
Note: Please refer to page 36 for size of grease fitting.

## Cartridge units cast housing
## Eccentric locking collar type

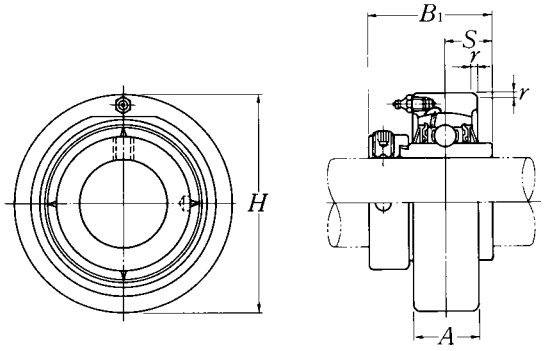


| Shaft dia. mm inch | Unit number 1) | Nominal dimensions mm inch H | A | r | B1 | S | Bearing number | Housing 1) number | Mass of unit kg lb |
|---|---|---|---|---|---|---|---|---|---|
| 95 | UELC319D1W3 | 240 | 72 | 4 | 122.3 | 38.9 | UEL319D1W3 | C319D1 | 17 |
| 3 5/8 | UELC319-310D1W3 | | | | | | UEL319-310D1W3 | C319D1 | |
| 3 11/16 | UELC319-311D1W3 | 9.4488 | 2 53/64 | 0.157 | 4.815 | 1.531 | UEL319-311D1W3 | C319D1 | 37 |
| 3 3/4 | UELC319-312D1W3 | | | | | | UEL319-312D1W3 | C319D1 | |
| 100 | UELC320D1W3 | 260 | 75 | 4 | 128.6 | 50 | UEL320D1W3 | C320D1 | 22 |
| 3 13/16 | UELC320-313D1W3 | | | | | | UEL320-313D1W3 | C320D1 | |
| 3 7/8 | UELC320-314D1W3 | 10.2362 | 2 61/64 | 0.157 | 5.063 | 1.969 | UEL320-314D1W3 | C320D1 | 49 |
| 3 15/16 | UELC320-315D1W3 | | | | | | UEL320-315D1W3 | C320D1 | |
| 4 | UELC320-400D1W3 | | | | | | UEL320-400D1W3 | C320D1 | |
| 105 | UELC321D1W3 | 260 | 75 | 4 | 139.7 | 48.4 | UEL321D1W3 | C321D1 | 21 |
| 110 | UELC322D1W3 | 300 | 80 | 5 | 141.3 | 49.2 | UEL322D1W3 | C322D1 | 31 |

Remarks: 1) These numbers indicate relubricatable type. If maintenance free type is needed, please order without suffix "D1".
Note: Please refer to page 36 for size of grease fitting.

## Mini stretcher units®
## Eccentric locking collar type

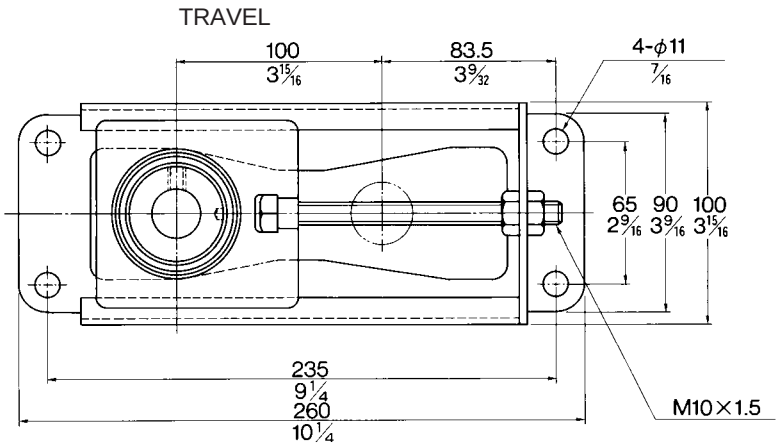


| Shaft dia. mm / inch | Unit number | Nominal dimensions mm / inch A | B1 | S | Bolt size mm / inch | Max. load 1) recommended N / lbf | Bearing number | Mass of unit kg / lb |
|---|---|---|---|---|---|---|---|---|
| 12 | AELPT201-10W3 | 37.1 | 28.6 | 6.5 | M10 | 3 500 | AEL201W3 | 1.1 |
| 1/2 | AELPT201-008-10W3 | 1 29/64 | 1.126 | 0.256 | 3/8 | 770 | AEL201-008W3 | 2.4 |
| 15 | AELPT202-10W3 | 37.1 | 28.6 | 6.5 | M10 | 3 500 | AEL202W3 | 1.1 |
| 9/16 | AELPT202-009-10W3 | 1 29/64 | 1.126 | 0.256 | 3/8 | 770 | AEL202-009W3 | 2.4 |
| 5/8 | AELPT202-010-10W3 | | | | | | AEL202-010W3 | |
| 17 | AELPT203-10W3 | 37.1 | 28.6 | 6.5 | M10 | 3 500 | AEL203W3 | 1.1 |
| 11/16 | AELPT203-011-10W3 | 1 29/64 | 1.126 | 0.256 | 3/8 | 770 | AEL203-011W3 | 2.4 |
| 20 | AELPT204-10W3 | 38.5 | 31 | 7.5 | M10 | 3 500 | AEL204W3 | 1.1 |
| 3/4 | AELPT204-012-10W3 | 1 33/64 | 1.220 | 0.295 | 3/8 | 770 | AEL204-012W3 | 2.4 |
| 25 | AELPT205-10W3 | 38.5 | 31 | 7.5 | M10 | 3 500 | AEL205W3 | 1.2 |
| 13/16 | AELPT205-013-10W3 | | | | | | AEL205-013W3 | |
| 7/8 | AELPT205-014-10W3 | 1 33/64 | 1.220 | 0.295 | 3/8 | 770 | AEL205-014W3 | 2.7 |
| 15/16 | AELPT205-015-10W3 | | | | | | AEL205-015W3 | |
| 1 | AELPT205-100-10W3 | | | | | | AEL205-100W3 | |

Remarks: 1) The Stretcher Unit is designed to only take a horizontal radial load, in line with the adjustment direction. Axial loads or vertical radial loads can deform or break the housing.

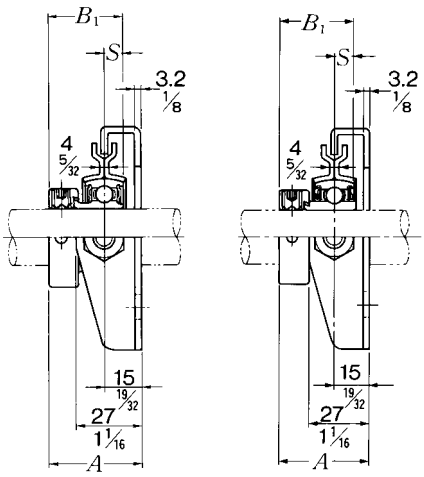


AELPT type JELPT type

| Shaft dia. mm inch | Unit number | Nominal dimensions mm inch A | B1 | S | Bolt size mm inch | Max. load 1) recommended N lbf | Bearing number | Mass of unit kg lb |
|---|---|---|---|---|---|---|---|---|
| 12 | JELPT201-10W3 | 37.1 | 28.6 | 6.5 | M10 | 3 500 | JEL201W3 | 1.1 |
| 1/2 | JELPT201-008-10W3 | 1 29/64 | 1.126 | 0.256 | 3/8 | 770 | JEL201-008W3 | 2.4 |
| 15 | JELPT202-10W3 | 37.1 | 28.6 | 6.5 | M10 | 3 500 | JEL202W3 | 1.1 |
| 9/16 | JELPT202-009-10W3 | 1 29/64 | 1.126 | 0.256 | 3/8 | 770 | JEL202-009W3 | 2.4 |
| 5/8 | JELPT202-010-10W3 | | | | | | JEL202-010W3 | |
| 17 | JELPT203-10W3 | 37.1 | 28.6 | 6.5 | M10 | 3 500 | JEL203W3 | 1.1 |
| 11/16 | JELPT203-011-10W3 | 1 29/64 | 1.126 | 0.256 | 3/8 | 770 | JEL203-011W3 | 2.4 |
| 20 | JELPT204-10W3 | 38.5 | 31 | 7.5 | M10 | 3 500 | JEL204W3 | 1.1 |
| 3/4 | JELPT204-012-10W3 | 1 33/64 | 1.220 | 0.295 | 3/8 | 770 | JEL204-012W3 | 2.4 |
| 25 | JELPT205-10W3 | 38.5 | 31 | 7.5 | M10 | 3 500 | JEL205W3 | 1.1 |
| 13/16 | JELPT205-013-10W3 | | | | | | JEL205-013W3 | |
| 7/8 | JELPT205-014-10W3 | 1 33/64 | 1.220 | 0.295 | 3/8 | 770 | JEL205-014W3 | 2.4 |
| 15/16 | JELPT205-015-10W3 | | | | | | JEL205-015W3 | |
| 1 | JELPT205-100-10W3 | | | | | | JEL205-100W3 | |

Remarks: 1) The Stretcher Unit is designed to only take a horizontal radial load, in line with the adjustment direction. Axial loads or vertical radial loads can deform or break the housing.

## Pillow blocks cast housing
## Adapter type

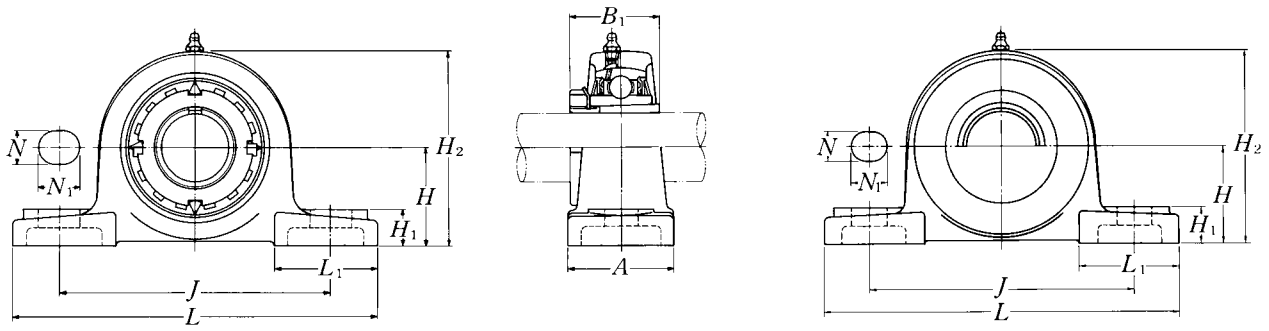


**Pressed steel dust cover type**
Open end: **S-UKP···D1**
Closed end: **SM-UKP···D1**

| Shaft dia. mm / inch | Unit number 1) 2) 3) | Nominal dimensions mm / inch H | L | J | A | N | N1 | H1 | H2 | B1 | L1 | Bolt size mm / inch | Bearing number 2) 3) |
|---|---|---|---|---|---|---|---|---|---|---|---|---|---|
| 20 | UKP205D1;H2305X | 36.5 | 140 | 105 | 38 | 13 | 16 | 15 | 71 | 35 | 42 | M10 | UK205D1;H2305X |
| 3/4 | UKP205D1;HE2305 | 1 7/16 | 5 1/2 | 4 1/8 | 1 1/2 | 1/2 | 5/8 | 19/32 | 2 25/32 | 1.378 | 1 21/32 | 3/8 | UK205D1;HE2305 |
| 25 | UKP206D1;H2306X | 42.9 | 165 | 121 | 48 | 17 | 20 | 17 | 83 | 38 | 54 | M14 | UK206D1;H2306X |
| 7/8 | UKP206D1;HS2306 | 1 11/16 | 6 1/2 | 4 3/4 | 1 7/8 | 21/32 | 25/32 | 21/32 | 3 9/32 | 1.496 | 2 1/8 | 1/2 | UK206D1;HS2306 |
| 1 | UKP206D1;HE2306X | | | | | | | | | | | | UK206D1;HE2306X |
| 30 | UKP207D1;H2307X | 47.6 | 167 | 127 | 48 | 17 | 20 | 18 | 93 | 43 | 54 | M14 | UK207D1;H2307X |
| 1 1/8 | UKP207D1;HS2307 | 1 7/8 | 6 9/16 | 5 | 1 7/8 | 21/32 | 25/32 | 23/32 | 3 21/32 | 1.693 | 2 1/8 | 1/2 | UK207D1;HS2307 |
| 35 | UKP208D1;H2308X | 49.2 | 184 | 137 | 54 | 17 | 20 | 18 | 98 | 46 | 52 | M14 | UK208D1;H2308X |
| 1 1/4 | UKP208D1;HE2308X | 1 15/16 | 7 1/4 | 5 13/32 | 2 1/8 | 21/32 | 25/32 | 23/32 | 3 27/32 | 1.811 | 2 1/16 | 1/2 | UK208D1;HE2308X |
| 1 3/8 | UKP208D1;HS2308X | | | | | | | | | | | | UK208D1;HS2308X |
| 40 | UKP209D1;H2309X | 54 | 190 | 146 | 54 | 17 | 20 | 20 | 106 | 50 | 60 | M14 | UK209D1;H2309X |
| 1 7/16 | UKP209D1;HA2309 | | | | | | | | | | | | UK209D1;HA2309 |
| 1 1/2 | UKP209D1;HE2309X | 2 1/8 | 7 15/32 | 5 3/4 | 2 1/8 | 21/32 | 25/32 | 25/32 | 4 3/16 | 1.969 | 2 3/8 | 1/2 | UK209D1;HE2309X |
| 1 5/8 | UKP209D1;HS2309X | | | | | | | | | | | | UK209D1;HS2309X |
| 45 | UKP210D1;H2310X | 57.2 | 206 | 159 | 60 | 20 | 23 | 21 | 114 | 55 | 65 | M16 | UK210D1;H2310X |
| 1 5/8 | UKP210D1;HS2310 | | | | | | | | | | | | UK210D1;HS2310 |
| 1 11/16 | UKP210D1;HA2310 | 2 1/4 | 8 1/8 | 6 1/4 | 2 3/8 | 25/32 | 29/32 | 13/16 | 4 1/2 | 2.165 | 2 9/16 | 5/8 | UK210D1;HA2310 |
| 1 3/4 | UKP210D1;HE2310X | | | | | | | | | | | | UK210D1;HE2310X |
| 50 | UKP211D1;H2311X | 63.5 | 219 | 171 | 60 | 20 | 23 | 23 | 126 | 59 | 65 | M16 | UK211D1;H2311X |
| 1 7/8 | UKP211D1;HS2311 | | | | | | | | | | | | UK211D1;HS2311 |
| 1 15/16 | UKP211D1;HA2311 | 2 1/2 | 8 5/8 | 6 23/32 | 2 3/8 | 25/32 | 29/32 | 29/32 | 4 31/32 | 2.323 | 2 9/16 | 5/8 | UK211D1;HA2311 |
| 2 | UKP211D1;HE2311XY | | | | | | | | | | | | UK211D1;HE2311XY |
| 55 | UKP212D1;H2312X | 69.8 | 241 | 184 | 70 | 20 | 23 | 25 | 138 | 62 | 70 | M16 | UK212D1;H2312X |
| 2 1/8 | UKP212D1;HS2312 | 2 3/4 | 9 1/2 | 7 1/4 | 2 3/4 | 25/32 | 29/32 | 31/32 | 5 7/16 | 2.441 | 2 3/4 | 5/8 | UK212D1;HS2312 |
| 60 | UKP213D1;H2313X | 76.2 | 265 | 203 | 70 | 25 | 28 | 27 | 151 | 65 | 77 | M20 | UK213D1;H2313X |
| 2 3/16 | UKP213D1;HA2313 | | | | | | | | | | | | UK213D1;HA2313 |
| 2 1/4 | UKP213D1;HE2313X | 3 | 10 7/16 | 8 | 2 3/4 | 31/32 | 1 3/32 | 1 1/16 | 5 15/16 | 2.559 | 3 1/32 | 3/4 | UK213D1;HE2313X |
| 2 3/8 | UKP213D1;HS2313X | | | | | | | | | | | | UK213D1;HS2313X |

Remarks: 1) These numbers indicate relubricatable type. If maintenance free type is needed, please order without suffix "D1".
2) Adapter number with suffix "X" means a narrow slot type adapter sleeve.
In this case the lock washer with the straight inner prong should be used.
3) For HE2311XY, screw thread pitch different from the standard is applied, because of the thin thread section of sleeve.
To distinguish it, a suffix "Y" is added.

Note: Please refer to page 36 for size of grease fitting.

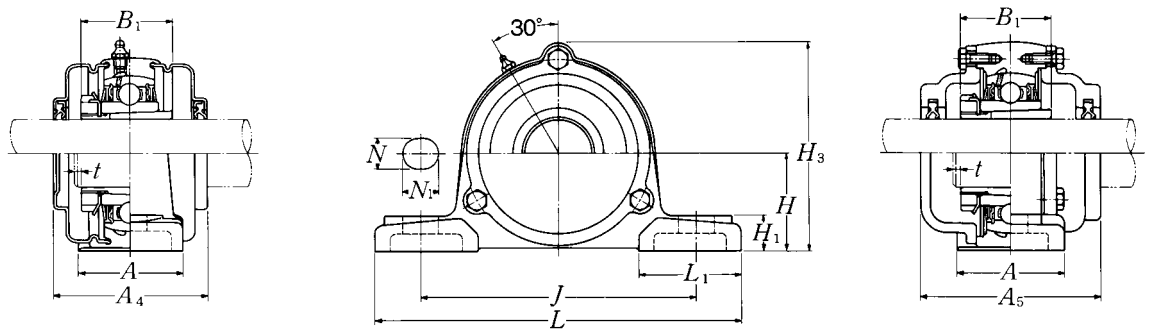


**Cast dust cover type**
Open end: **C-UKP···D1**
Closed end: **CM-UKP···D1**

| Housing[1)] number | Unit number [1) 2) 3)] pressed steel dust cover type | Unit number [1) 2) 3)] cast dust cover type | Nominal dimensions mm $t$ max. | $A_4$ | inch $H_3$ | $A_5$ | Mass of unit kg UKP | S(SM) | lb C(CM) |
|---|---|---|---|---|---|---|---|---|---|
| P205D1 | S(SM)-UKP205D1;H2305X | C(CM)-UKP205D1;H2305X | 2 | 57 | 76 | 70 | 0.8 | 0.9 | 1.2 |
| P205D1 | S(SM)-UKP205ED1;HE2305 | C(CM)-UKP205ED1;HE2305 | 5/64 | 2 1/4 | 3 | 2 3/4 | 1.8 | 2.0 | 2.7 |
| P206D1 | S(SM)-UKP206D1;H2306X | C(CM)-UKP206D1;H2306X | 2 | 62 | 88 | 75 | 1.4 | 1.5 | 1.8 |
| P206D1 | S(SM)-UKP206SD1;HS2306 | C(CM)-UKP206SD1;HS2306 | 5/64 | 2 7/16 | 3 15/32 | 2 15/16 | 3.1 | 3.3 | 4.0 |
| P206D1 | S(SM)-UKP206ED1;HE2306X | C(CM)-UKP206ED1;HE2306X | | | | | | | |
| P207D1 | S(SM)-UKP207D1;H2307X | C(CM)-UKP207D1;H2307X | 3 | 72 | 99 | 80 | 1.7 | 1.8 | 2.1 |
| P207D1 | S(SM)-UKP207SD1;HS2307 | C(CM)-UKP207SD1;HS2307 | 1/8 | 2 27/32 | 3 29/32 | 3 5/32 | 3.7 | 4.0 | 4.6 |
| P208D1 | S(SM)-UKP208D1;H2308X | C(CM)-UKP208D1;H2308X | 3 | 82 | 105 | 90 | 2.0 | 2.2 | 2.8 |
| P208D1 | S(SM)-UKP208ED1;HE2308X | C(CM)-UKP208ED1;HE2308X | 1/8 | 3 7/32 | 4 1/8 | 3 17/32 | 4.4 | 4.9 | 6.2 |
| P208D1 | S(SM)-UKP208SD1;HS2308X | C(CM)-UKP208SD1;HS2308X | | | | | | | |
| P209D1 | S(SM)-UKP209D1;H2309X | C(CM)-UKP209D1;H2309X | 3 | 82 | 113 | 95 | 2.3 | 2.5 | 3.3 |
| P209D1 | S(SM)-UKP209AD1;HA2309 | C(CM)-UKP209AD1;HA2309 | | | | | | | |
| P209D1 | S(SM)-UKP209ED1;HE2309X | C(CM)-UKP209ED1;HE2309X | 1/8 | 3 7/32 | 4 7/16 | 3 3/4 | 5.1 | 5.5 | 7.3 |
| P209D1 | S(SM)-UKP209SD1;HS2309X | C(CM)-UKP209SD1;HS2309X | | | | | | | |
| P210D1 | S(SM)-UKP210D1;H2310X | C(CM)-UKP210D1;H2310X | 3 | 87 | 119 | 100 | 2.9 | 3.0 | 3.9 |
| P210D1 | S(SM)-UKP210SD1;HS2310 | C(CM)-UKP210SD1;HS2310 | | | | | | | |
| P210D1 | S(SM)-UKP210AD1;HA2310 | C(CM)-UKP210AD1;HA2310 | 1/8 | 3 7/16 | 4 11/16 | 3 15/16 | 6.4 | 6.6 | 8.6 |
| P210D1 | S(SM)-UKP210ED1;HE2310X | C(CM)-UKP210ED1;HE2310X | | | | | | | |
| P211D1 | S(SM)-UKP211D1;H2311X | C(CM)-UKP211D1;H2311X | 4 | 92 | 130 | 100 | 3.6 | 3.7 | 4.8 |
| P211D1 | S(SM)-UKP211SD1;HS2311 | C(CM)-UKP211SD1;HS2311 | | | | | | | |
| P211D1 | S(SM)-UKP211AD1;HA2311 | C(CM)-UKP211AD1;HA2311 | 5/32 | 3 5/8 | 5 1/8 | 3 15/16 | 7.9 | 8.2 | 11 |
| P211D1 | S(SM)-UKP211ED1;HE2311XY | C(CM)-UKP211ED1;HE2311XY | | | | | | | |
| P212D1 | S(SM)-UKP212D1;H2312X | C(CM)-UKP212D1;H2312X | 4 | 102 | 143 | 115 | 4.7 | 5.1 | 6.2 |
| P212D1 | S(SM)-UKP212SD1;HS2312 | C(CM)-UKP212SD1;HS2312 | 5/32 | 4 1/32 | 5 5/8 | 4 17/32 | 10 | 11 | 14 |
| P213D1 | S(SM)-UKP213D1;H2313X | C(CM)-UKP213D1;H2313X | 4 | 107 | 155 | 120 | 5.7 | 5.9 | 7.6 |
| P213D1 | S(SM)-UKP213AD1;HA2313 | C(CM)-UKP213AD1;HA2313 | | | | | | | |
| P213D1 | S(SM)-UKP213ED1;HE2313X | C(CM)-UKP213ED1;HE2313X | 5/32 | 4 7/32 | 6 3/32 | 4 23/32 | 13 | 13 | 17 |
| P213D1 | S(SM)-UKP213SD1;HS2313X | C(CM)-UKP213SD1;HS2313X | | | | | | | |

## Pillow blocks cast housing
## Adapter type

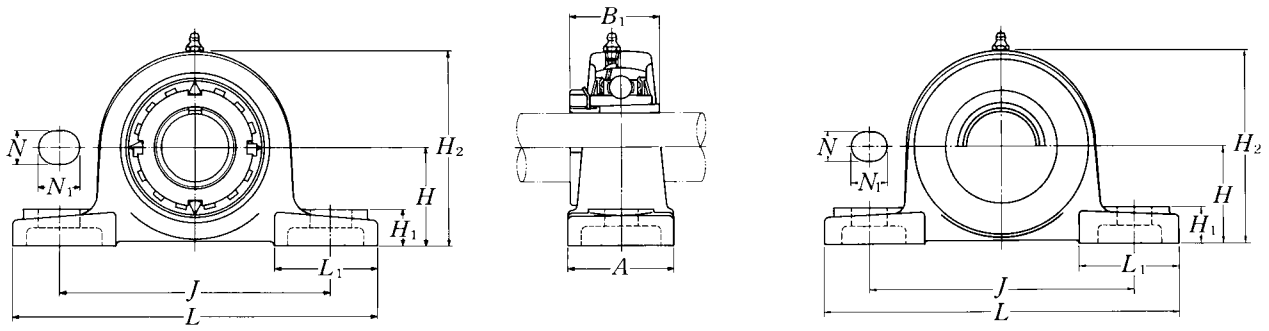


**Pressed steel dust cover type**
Open end: **S-UKP···D1**
Closed end: **SM-UKP···D1**

| Shaft dia. mm / inch | Unit number 1) 2) 3) | Nominal dimensions mm / inch H | L | J | A | N | N1 | H1 | H2 | B1 | L1 | Bolt size mm / inch | Bearing number 2) 3) |
|---|---|---|---|---|---|---|---|---|---|---|---|---|---|
| **65** | **UKP215D1;H2315X** | 82.6 | 275 | 217 | 74 | 25 | 28 | 28 | 163 | 73 | 80 | M20 | UK215D1;H2315X |
| **2 7/16** | **UKP215D1;HA2315** | 3 1/4 | 10 13/16 | 8 17/32 | 2 29/32 | 31/32 | 1 3/32 | 1 3/32 | 6 13/32 | 2.874 | 3 5/32 | 3/4 | UK215D1;HA2315 |
| **2 1/2** | **UKP215D1;HE2315X** | | | | | | | | | | | | UK215D1;HE2315X |
| **70** | **UKP216D1;H2316X** | 88.9 | 292 | 232 | 78 | 25 | 28 | 30 | 175 | 78 | 85 | M20 | UK216D1;H2316X |
| **2 11/16** | **UKP216D1;HA2316** | 3 1/2 | 11 1/2 | 9 1/8 | 3 1/16 | 31/32 | 1 3/32 | 1 3/16 | 6 7/8 | 3.071 | 3 11/32 | 3/4 | UK216D1;HA2316 |
| **2 3/4** | **UKP216D1;HE2316X** | | | | | | | | | | | | UK216D1;HE2316X |
| **75** | **UKP217D1;H2317X** | 95.2 | 310 | 247 | 83 | 25 | 28 | 32 | 187 | 82 | 85 | M20 | UK217D1;H2317X |
| **2 15/16** | **UKP217D1;HA2317X** | 3 3/4 | 12 7/32 | 9 23/32 | 3 9/32 | 31/32 | 1 3/32 | 1 1/4 | 7 3/8 | 3.228 | 3 11/32 | 3/4 | UK217D1;HA2317X |
| **3** | **UKP217D1;HE2317X** | | | | | | | | | | | | UK217D1;HE2317X |
| **80** | **UKP218D1;H2318X** | 101.6 | 327 | 262 | 88 | 27 | 30 | 33 | 200 | 86 | 90 | M22 | UK218D1;H2318X |
| **3 3/16** | **UKP218D1;HA2318X** | 4 | 12 7/8 | 10 5/16 | 3 15/32 | 1 1/16 | 1 3/16 | 1 5/16 | 7 7/8 | 3.386 | 3 17/32 | 7/8 | UK218D1;HA2318X |

Remarks: 1) These numbers indicate relubricatable type. If maintenance free type is needed, please order without suffix "D1".
2) Adapter number with suffix "X" means a narrow slot type adapter sleeve.
In this case the lock washer with the straight inner prong should be used.
3) For HE2311XY, screw thread pitch different from the standard is applied, because of the thin thread section of sleeve.
To distinguish it, a suffix "Y" is added.

Note: Please refer to page 36 for size of grease fitting.

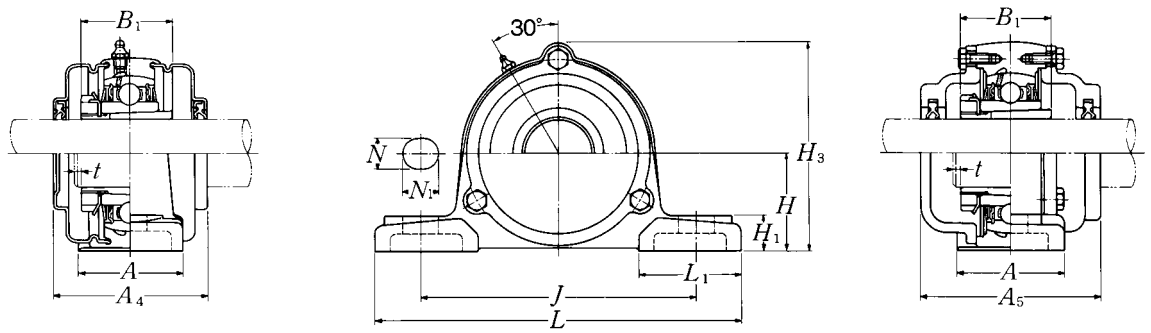


**Cast dust cover type**
Open end: **C-UKP···D1**
Closed end: **CM-UKP···D1**

| Housing[1)] number | Unit number [1) 2) 3)] pressed steel dust cover type | Unit number [1) 2) 3)] cast dust cover type | Nominal dimensions mm $t$ max. | $A_4$ | inch $H_3$ | $A_5$ | Mass of unit kg UKP | S(SM) | lb C(CM) |
|---|---|---|---|---|---|---|---|---|---|
| P215D1 | — | C(CM)-UKP215D1;H2315X | 4 | — | 168 | 135 | 7.5 | — | 10 |
| P215D1 | — | C(CM)-UKP215AD1;HA2315 | 5/32 | — | 6 5/8 | 5 5/16 | 17 | — | 22 |
| P215D1 | | C(CM)-UKP215ED1;HE2315X | | | | | | | |
| P216D1 | — | C(CM)-UKP216D1;H2316X | 4 | — | 181 | 145 | 9.2 | — | 12 |
| P216D1 | — | C(CM)-UKP216AD1;HA2316 | 5/32 | — | 7 1/8 | 5 23/32 | 20 | — | 26 |
| P216D1 | | C(CM)-UKP216ED1;HE2316X | | | | | | | |
| P217D1 | — | C(CM)-UKP217D1;H2317X | 5 | — | 191 | 155 | 11 | — | 14 |
| P217D1 | — | C(CM)-UKP217AD1;HA2317X | 13/64 | — | 7 17/32 | 6 3/32 | 24 | — | 31 |
| P217D1 | | C(CM)-UKP217ED1;HE2317X | | | | | | | |
| P218D1 | — | C(CM)-UKP218D1;H2318X | 5 | — | 204 | 165 | 13 | — | 16 |
| P218D1 | — | C(CM)-UKP218AD1;HA2318X | 13/64 | — | 8 1/32 | 6 1/2 | 29 | — | 35 |

## Pillow blocks cast housing
## Adapter type

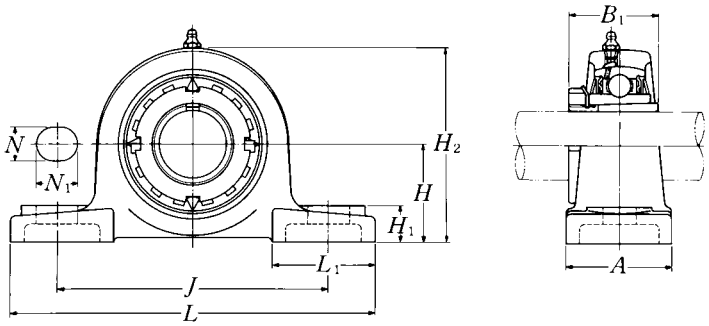


| Shaft dia. mm / inch | Unit number 1) 2) 3) | Nominal dimensions mm / inch H | L | J | A | N | N1 | H1 | H2 | B1 | L1 | Bolt size mm / inch | Bearing number 2) 3) |
|---|---|---|---|---|---|---|---|---|---|---|---|---|---|
| 20 | UKP305D1;H2305X | 45 | 175 | 132 | 45 | 17 | 20 | 15 | 85 | 35 | 54 | M14 | UK305D1;H2305X |
| 3/4 | UKP305D1;HE2305 | 1 49/64 | 6 7/8 | 5 3/16 | 1 25/32 | 21/32 | 25/32 | 19/32 | 3 11/32 | 1.378 | 2 1/8 | 1/2 | UK305D1;HE2305 |
| 25 | UKP306D1;H2306X | 50 | 180 | 140 | 50 | 17 | 20 | 18 | 95 | 38 | 54 | M14 | UK306D1;H2306X |
| 7/8 | UKP306D1;HS2306 | 1 31/32 | 7 3/32 | 5 1/2 | 1 31/32 | 21/32 | 25/32 | 23/32 | 3 3/4 | 1.496 | 2 1/8 | 1/2 | UK306D1;HS2306 |
| 1 | UKP306D1;HE2306X | | | | | | | | | | | | UK306D1;HE2306X |
| 30 | UKP307D1;H2307X | 56 | 210 | 160 | 56 | 17 | 25 | 20 | 106 | 43 | 60 | M14 | UK307D1;H2307X |
| 1 1/8 | UKP307D1;HS2307 | 2 13/64 | 8 9/32 | 6 5/16 | 2 7/32 | 21/32 | 31/32 | 25/32 | 4 3/16 | 1.693 | 2 3/8 | 1/2 | UK307D1;HS2307 |
| 35 | UKP308D1;H2308X | 60 | 220 | 170 | 60 | 17 | 27 | 22 | 116 | 46 | 60 | M14 | UK308D1;H2308X |
| 1 1/4 | UKP308D1;HE2308X | 2 23/64 | 8 21/32 | 6 11/16 | 2 3/8 | 21/32 | 1 1/16 | 7/8 | 4 9/16 | 1.811 | 2 3/8 | 1/2 | UK308D1;HE2308X |
| 1 3/8 | UKP308D1;HS2308X | | | | | | | | | | | | UK308D1;HS2308X |
| 40 | UKP309D1;H2309X | 67 | 245 | 190 | 67 | 20 | 30 | 24 | 129 | 50 | 65 | M16 | UK309D1;H2309X |
| 1 7/16 | UKP309D1;HA2309 | | | | | | | | | | | | UK309D1;HA2309 |
| 1 1/2 | UKP309D1;HE2309X | 2 41/64 | 9 21/32 | 7 15/32 | 2 5/8 | 25/32 | 1 3/16 | 15/16 | 5 3/32 | 1.969 | 2 9/16 | 5/8 | UK309D1;HE2309X |
| 1 5/8 | UKP309D1;HS2309X | | | | | | | | | | | | UK309D1;HS2309X |
| 45 | UKP310D1;H2310X | 75 | 275 | 212 | 75 | 20 | 35 | 27 | 143 | 55 | 75 | M16 | UK310D1;H2310X |
| 1 5/8 | UKP310D1;HS2310 | | | | | | | | | | | | UK310D1;HS2310 |
| 1 11/16 | UKP310D1;HA2310 | 2 61/64 | 10 13/16 | 8 11/32 | 2 15/16 | 25/32 | 1 3/8 | 1 1/16 | 5 5/8 | 2.165 | 2 15/16 | 5/8 | UK310D1;HA2310 |
| 1 3/4 | UKP310D1;HE2310X | | | | | | | | | | | | UK310D1;HE2310X |
| 50 | UKP311D1;H2311X | 80 | 310 | 236 | 80 | 20 | 38 | 30 | 154 | 59 | 85 | M16 | UK311D1;H2311X |
| 1 7/8 | UKP311D1;HS2311 | | | | | | | | | | | | UK311D1;HS2311 |
| 1 15/16 | UKP311D1;HA2311 | 3 5/32 | 12 7/32 | 9 9/32 | 3 5/32 | 25/32 | 1 1/2 | 1 3/16 | 6 1/16 | 2.323 | 3 11/32 | 5/8 | UK311D1;HA2311 |
| 2 | UKP311D1;HE2311XY | | | | | | | | | | | | UK311D1;HE2311XY |
| 55 | UKP312D1;H2312X | 85 | 330 | 250 | 85 | 25 | 38 | 32 | 165 | 62 | 95 | M20 | UK312D1;H2312X |
| 2 1/8 | UKP312D1;HS2312 | 3 11/32 | 13 | 9 27/32 | 3 11/32 | 31/32 | 1 1/2 | 1 1/4 | 6 1/2 | 2.441 | 3 3/4 | 3/4 | UK312D1;HS2312 |
| 60 | UKP313D1;H2313X | 90 | 340 | 260 | 90 | 25 | 38 | 33 | 176 | 65 | 105 | M20 | UK313D1;H2313X |
| 2 3/16 | UKP313D1;HA2313 | | | | | | | | | | | | UK313D1;HA2313 |
| 2 1/4 | UKP313D1;HE2313X | 3 35/64 | 13 3/8 | 10 1/4 | 3 17/32 | 31/32 | 1 1/2 | 1 5/16 | 6 15/16 | 2.559 | 4 1/8 | 3/4 | UK313D1;HE2313X |
| 2 3/8 | UKP313D1;HS2313X | | | | | | | | | | | | UK313D1;HS2313X |

Remarks: 1) These numbers indicate relubricatable type. If maintenance free type is needed, please order without suffix "D1".
2) Adapter number with suffix "X" means a narrow slot type adapter sleeve.
In this case the lock washer with the straight inner prong should be used.
3) For HE2311XY, screw thread pitch different from the standard is applied, because of the thin thread section of sleeve.
To distinguish it, a suffix "Y" is added.

Note: Please refer to page 36 for size of grease fitting.

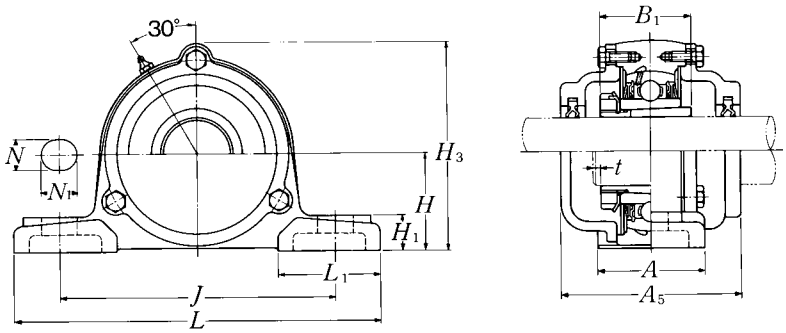


**Cast dust cover type**
Open end: **C-UKP···D1**
Closed end: **CM-UKP···D1**

| Housing[1)] number | Unit number [1) 2) 3)] cast dust cover type | Nominal dimensions mm / inch | | | Mass of unit kg | lb |
|---|---|---|---|---|---|---|
| | | $t$ max. | $H_3$ | $A_5$ | UKP | C(CM) |
| P305D1 | C(CM)-UKP305D1;H2305X | 2 | 91 | 80 | 1.4 | 1.9 |
| P305D1 | C(CM)-UKP305ED1;HE2305 | 5/64 | 3 19/32 | 3 5/32 | 3.1 | 4.2 |
| P306D1 | C(CM)-UKP306D1;H2306X | 2 | 105 | 85 | 1.8 | 2.6 |
| P306D1 | C(CM)-UKP306SD1;HS2306 | 5/64 | 4 1/8 | 3 11/32 | 4.0 | 5.7 |
| P306D1 | C(CM)-UKP306ED1;HE2306X | | | | | |
| P307D1 | C(CM)-UKP307D1;H2307X | 3 | 115 | 95 | 2.6 | 3.3 |
| P307D1 | C(CM)-UKP307SD1;HS2307 | 1/8 | 4 17/32 | 3 3/4 | 5.7 | 7.3 |
| P308D1 | C(CM)-UKP308D1;H2308X | 3 | 125 | 105 | 3.1 | 4.2 |
| P308D1 | C(CM)-UKP308ED1;HE2308X | 1/8 | 4 29/32 | 4 1/8 | 6.8 | 9.3 |
| P308D1 | C(CM)-UKP308SD1;HS2308X | | | | | |
| P309D1 | C(CM)-UKP309D1;H2309X | 3 | 140 | 110 | 4.1 | 5.6 |
| P309D1 | C(CM)-UKP309AD1;HA2309 | | | | | |
| P309D1 | C(CM)-UKP309ED1;HE2309X | 1/8 | 5 1/2 | 4 11/32 | 9.0 | 12 |
| P309D1 | C(CM)-UKP309SD1;HS2309X | | | | | |
| P310D1 | C(CM)-UKP310D1;H2310X | 3 | 156 | 120 | 5.6 | 7.2 |
| P310D1 | C(CM)-UKP310SD1;HS2310 | | | | | |
| P310D1 | C(CM)-UKP310AD1;HA2310 | 1/8 | 6 5/32 | 4 23/32 | 12 | 16 |
| P310D1 | C(CM)-UKP310ED1;HE2310X | | | | | |
| P311D1 | C(CM)-UKP311D1;H2311X | 4 | 166 | 125 | 7.3 | 9.0 |
| P311D1 | C(CM)-UKP311SD1;HS2311 | | | | | |
| P311D1 | C(CM)-UKP311AD1;HA2311 | 5/32 | 6 17/32 | 4 29/32 | 16 | 20 |
| P311D1 | C(CM)-UKP311ED1;HE2311XY | | | | | |
| P312D1 | C(CM)-UKP312D1;H2312X | 4 | 179 | 135 | 9.3 | 11 |
| P312D1 | C(CM)-UKP312SD1;HS2312 | 5/32 | 7 1/16 | 5 5/16 | 21 | 24 |
| P313D1 | C(CM)-UKP313D1;H2313X | 4 | 190 | 140 | 10 | 12 |
| P313D1 | C(CM)-UKP313AD1;HA2313 | | | | | |
| P313D1 | C(CM)-UKP313ED1;HE2313X | 5/32 | 7 15/32 | 5 1/2 | 22 | 26 |
| P313D1 | C(CM)-UKP313SD1;HS2313X | | | | | |

## Pillow blocks cast housing
## Adapter type

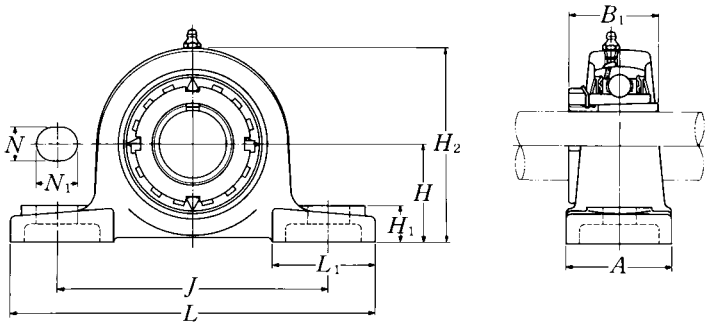


| Shaft dia. mm / inch | Unit number 1) 2) 3) | Nominal dimensions mm / inch H | L | J | A | N | N1 | H1 | H2 | B1 | L1 | Bolt size mm / inch | Bearing number 2) 3) |
|---|---|---|---|---|---|---|---|---|---|---|---|---|---|
| 65<br>2 7/16<br>2 1/2 | UKP315D1;H2315X<br>UKP315D1;HA2315<br>UKP315D1;HE2315X | 100<br>3 15/16 | 380<br>14 31/32 | 290<br>11 13/32 | 100<br>3 15/16 | 27<br>1 1/16 | 40<br>1 9/16 | 35<br>1 3/8 | 198<br>7 25/32 | 73<br>2.874 | 110<br>4 11/32 | M22<br>7/8 | UK315D1;H2315X<br>UK315D1;HA2315<br>UK315D1;HE2315X |
| 70<br>2 11/16<br>2 3/4 | UKP316D1;H2316X<br>UKP316D1;HA2316<br>UKP316D1;HE2316X | 106<br>4 11/64 | 400<br>15 3/4 | 300<br>11 13/16 | 110<br>4 11/32 | 27<br>1 1/16 | 40<br>1 9/16 | 40<br>1 9/16 | 210<br>8 9/32 | 78<br>3.071 | 110<br>4 11/32 | M22<br>7/8 | UK316D1;H2316X<br>UK316D1;HA2316<br>UK316D1;HE2316X |
| 75<br>2 15/16<br>3 | UKP317D1;H2317X<br>UKP317D1;HA2317X<br>UKP317D1;HE2317X | 112<br>4 13/32 | 420<br>16 17/32 | 320<br>12 19/32 | 110<br>4 11/32 | 33<br>1 5/16 | 45<br>1 25/32 | 40<br>1 9/16 | 220<br>8 21/32 | 82<br>3.228 | 120<br>4 23/32 | M27<br>1 | UK317D1;H2317X<br>UK317D1;HA2317X<br>UK317D1;HE2317X |
| 80<br>3 3/16 | UKP318D1;H2318X<br>UKP318D1;HA2318X | 118<br>4 41/64 | 430<br>16 15/16 | 330<br>13 | 110<br>4 11/32 | 33<br>1 5/16 | 45<br>1 25/32 | 45<br>1 25/32 | 235<br>9 1/4 | 86<br>3.386 | 120<br>4 23/32 | M27<br>1 | UK318D1;H2318X<br>UK318D1;HA2318X |
| 85<br>3 1/4 | UKP319D1;H2319X<br>UKP319D1;HE2319X | 125<br>4 59/64 | 470<br>18 1/2 | 360<br>14 3/16 | 120<br>4 23/32 | 36<br>1 13/32 | 50<br>1 31/32 | 45<br>1 25/32 | 250<br>9 27/32 | 90<br>3.543 | 125<br>4 29/32 | M30<br>1 1/8 | UK319D1;H2319X<br>UK319D1;HE2319X |
| 90<br>3 7/16<br>3 1/2 | UKP320D1;H2320X<br>UKP320D1;HA2320<br>UKP320D1;HE2320X | 140<br>5 33/64 | 490<br>19 9/32 | 380<br>14 31/32 | 120<br>4 23/32 | 36<br>1 13/32 | 50<br>1 31/32 | 50<br>1 31/32 | 275<br>10 13/16 | 97<br>3.819 | 130<br>5 1/8 | M30<br>1 1/8 | UK320D1;H2320X<br>UK320D1;HA2320<br>UK320D1;HE2320X |
| 100 | UKP322D1;H2322X | 150 | 520 | 400 | 140 | 40 | 55 | 55 | 300 | 105 | 135 | M33 | UK322D1;H2322X |
| 110 | UKP324D1;H2324X | 160 | 570 | 450 | 140 | 40 | 55 | 65 | 320 | 112 | 140 | M33 | UK324D1;H2324X |
| 115 | UKP326D1;H2326 | 180 | 600 | 480 | 140 | 40 | 55 | 75 | 355 | 121 | 140 | M33 | UK326D1;H2326 |
| 125 | UKP328D1;H2328 | 200 | 620 | 500 | 140 | 40 | 55 | 75 | 390 | 131 | 140 | M33 | UK328D1;H2328 |

Remarks: 1) These numbers indicate relubricatable type. If maintenance free type is needed, please order without suffix "D1".
2) Adapter number with suffix "X" means a narrow slot type adapter sleeve.
In this case the lock washer with the straight inner prong should be used.
3) For HE2311XY, screw thread pitch different from the standard is applied, because of the thin thread section of sleeve.
To distinguish it, a suffix "Y" is added.

Note: Please refer to page 36 for size of grease fitting.

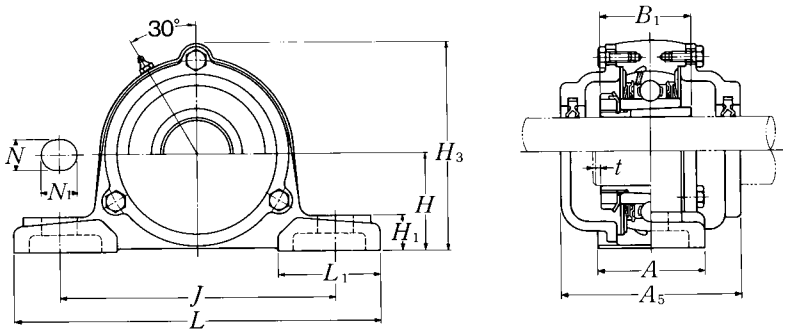


**Cast dust cover type**
Open end: **C-UKP···D1**
Closed end: **CM-UKP···D1**

| Housing number 1) | Unit number 1) 2) 3) cast dust cover type | Nominal dimensions mm inch $t$ max. | $H_3$ | $A_5$ | Mass of unit kg UKP | lb C(CM) |
|---|---|---|---|---|---|---|
| P315D1 | C(CM)-UKP315D1;H2315X | 4 | 210 | 150 | 14 | 18 |
| P315D1 | C(CM)-UKP315AD1;HA2315 | 5/32 | 8 9/32 | 5 29/32 | 31 | 40 |
| P315D1 | C(CM)-UKP315ED1;HE2315X | | | | | |
| P316D1 | C(CM)-UKP316D1;H2316X | 4 | 221 | 155 | 17 | 21 |
| P316D1 | C(CM)-UKP316AD1;HA2316 | 5/32 | 8 11/16 | 6 3/32 | 37 | 46 |
| P316D1 | C(CM)-UKP316ED1;HE2316X | | | | | |
| P317D1 | C(CM)-UKP317D1;H2317X | 5 | 235 | 170 | 19 | 24 |
| P317D1 | C(CM)-UKP317AD1;HA2317X | 13/64 | 9 1/4 | 6 11/16 | 44 | 60 |
| P317D1 | C(CM)-UKP317ED1;HE2317X | | | | | |
| P318D1 | C(CM)-UKP318D1;H2318X | 5 | 246 | 170 | 22 | 28 |
| P318D1 | C(CM)-UKP318AD1;HA2318X | 13/64 | 9 11/16 | 6 11/16 | 53 | 68 |
| P319D1 | C(CM)-UKP319D1;H2319X | 5 | 258 | 180 | 27 | 33 |
| P319D1 | C(CM)-UKP319ED1;HE2319X | 13/64 | 10 5/32 | 7 3/32 | 64 | 84 |
| P320D1 | C(CM)-UKP320D1;H2320X | 5 | 283 | 190 | 33 | 40 |
| P320D1 | C(CM)-UKP320AD1;HA2320 | 13/64 | 11 5/32 | 7 15/32 | 77 | 104 |
| P320D1 | C(CM)-UKP320ED1;HE2320X | | | | | |
| P322D1 | C(CM)-UKP322D1;H2322X | 5 | 313 | 200 | 43 | 53 |
| P324D1 | C(CM)-UKP324D1;H2324X | 5 | 335 | 215 | 50 | 67 |
| P326D1 | C(CM)-UKP326D1;H2326 | 6 | 375 | 225 | 69 | 86 |
| P328D1 | C(CM)-UKP328D1;H2328 | 6 | 407 | 235 | 84 | 101 |

## Pillow blocks cast housing
## Adapter type

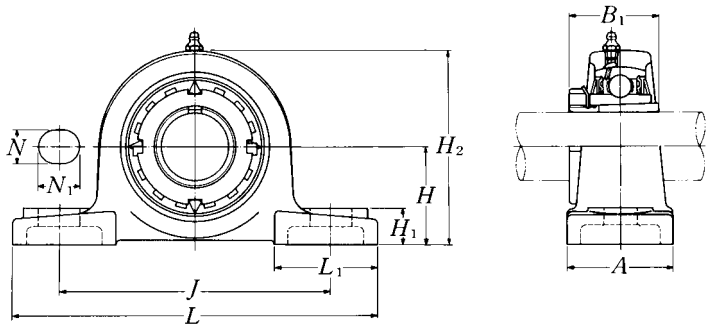


| Shaft dia. mm / inch | Unit number 1) 2) 3) | Nominal dimensions mm / inch H | L | J | A | N | N1 | H1 | H2 | B1 | L1 | Bolt size mm / inch |
|---|---|---|---|---|---|---|---|---|---|---|---|---|
| 20 | UKPX05D1;H2305X | 44.4 | 159 | 119 | 51 | 17 | 20 | 18 | 85 | 35 | 50 | M14 |
| 3/4 | UKPX05D1;HE2305 | 1 3/4 | 6 1/4 | 4 11/16 | 2 | 21/32 | 25/32 | 23/32 | 3 11/32 | 1.378 | 1 31/32 | 1/2 |
| 25 | UKPX06D1;H2306X | 47.6 | 175 | 127 | 57 | 17 | 20 | 20 | 93 | 38 | 54 | M14 |
| 7/8 | UKPX06D1;HS2306 | 1 7/8 | 6 7/8 | 5 | 2 1/4 | 21/32 | 25/32 | 25/32 | 3 21/32 | 1.496 | 2 1/8 | 1/2 |
| 1 | UKPX06D1;HE2306X | | | | | | | | | | | |
| 30 | UKPX07D1;H2307X | 54 | 203 | 144 | 57 | 17 | 20 | 21 | 105 | 43 | 60 | M14 |
| 1 1/8 | UKPX07D1;HS2307 | 2 1/8 | 8 | 5 21/32 | 2 1/4 | 21/32 | 25/32 | 13/16 | 4 1/8 | 1.693 | 2 3/8 | 1/2 |
| 35 | UKPX08D1;H2308X | 58.7 | 222 | 156 | 67 | 20 | 23 | 26 | 111 | 46 | 65 | M16 |
| 1 1/4 | UKPX08D1;HE2308X | 2 5/16 | 8 3/4 | 6 5/32 | 2 5/8 | 25/32 | 29/32 | 1 1/32 | 4 3/8 | 1.811 | 2 9/16 | 5/8 |
| 1 3/8 | UKPX08D1;HS2308X | | | | | | | | | | | |
| 40 | UKPX09D1;H2309X | 58.7 | 222 | 156 | 67 | 20 | 23 | 26 | 116 | 50 | 65 | M16 |
| 1 7/16 | UKPX09D1;HA2309 | | | | | | | | | | | |
| 1 1/2 | UKPX09D1;HE2309X | 2 5/16 | 8 3/4 | 6 5/32 | 2 5/8 | 25/32 | 29/32 | 1 1/32 | 4 9/16 | 1.969 | 2 9/16 | 5/8 |
| 1 5/8 | UKPX09D1;HS2309X | | | | | | | | | | | |
| 45 | UKPX10D1;H2310X | 63.5 | 241 | 171 | 73 | 20 | 23 | 27 | 126 | 55 | 70 | M16 |
| 1 5/8 | UKPX10D1;HS2310 | | | | | | | | | | | |
| 1 11/16 | UKPX10D1;HA2310 | 2 1/2 | 9 1/2 | 6 23/32 | 2 7/8 | 25/32 | 29/32 | 1 1/16 | 4 31/32 | 2.165 | 2 3/4 | 5/8 |
| 1 3/4 | UKPX10D1;HE2310X | | | | | | | | | | | |
| 50 | UKPX11D1;H2311X | 69.8 | 260 | 184 | 79 | 25 | 28 | 30 | 137 | 59 | 75 | M20 |
| 1 7/8 | UKPX11D1;HS2311 | | | | | | | | | | | |
| 1 15/16 | UKPX11D1;HA2311 | 2 3/4 | 10 1/4 | 7 1/4 | 3 1/8 | 31/32 | 1 3/32 | 1 3/16 | 5 13/32 | 2.323 | 2 15/16 | 3/4 |
| 2 | UKPX11D1;HE2311XY | | | | | | | | | | | |
| 55 | UKPX12D1;H2312X | 76.2 | 286 | 203 | 83 | 25 | 28 | 33 | 151 | 62 | 80 | M20 |
| 2 1/8 | UKPX12D1;HS2312 | 3 | 11 1/4 | 8 | 3 9/32 | 31/32 | 1 3/32 | 1 5/16 | 5 15/16 | 2.441 | 3 5/32 | 3/4 |
| 60 | UKPX13D1;H2313X | 76.2 | 286 | 203 | 83 | 25 | 28 | 33 | 154 | 65 | 80 | M20 |
| 2 3/16 | UKPX13D1;HA2313 | | | | | | | | | | | |
| 2 1/4 | UKPX13D1;HE2313X | 3 | 11 1/4 | 8 | 3 9/32 | 31/32 | 1 3/32 | 1 5/16 | 6 1/16 | 2.559 | 3 5/32 | 3/4 |
| 2 3/8 | UKPX13D1;HS2313X | | | | | | | | | | | |

Remarks: 1) These numbers indicate relubricatable type. If maintenance free type is needed, please order without suffix "D1".
2) Adapter number with suffix "X" means a narrow slot type adapter sleeve.
In this case the lock washer with the straight inner prong should be used.
3) For HE2311XY, screw thread pitch different from the standard is applied, because of the thin thread section of sleeve.
To distinguish it, a suffix "Y" is added.

Note: Please refer to page 36 for size of grease fitting.

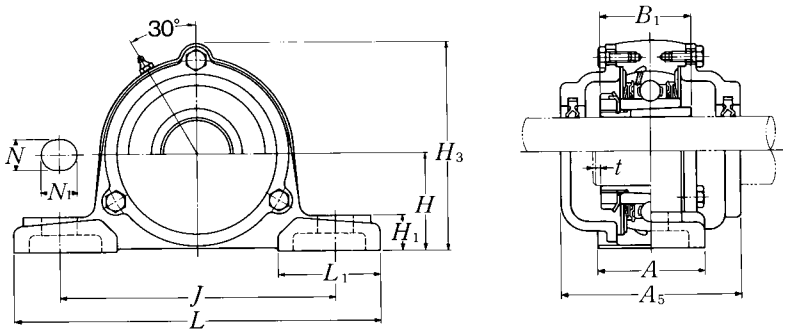


**Cast dust cover type**
Open end: **C-UKPX···D1**
Closed end: **CM-UKPX···D1**

| Bearing number 2) 3) | Housing 1) number | Unit number 1) 2) 3) cast dust cover type | Nominal dimensions mm / inch $t$ | $H_3$ | $A_5$ | Mass of unit kg / lb UKPX | C(CM) |
|---|---|---|---|---|---|---|---|
| UKX05D1;H2305X | PX05D1 | C(CM)-UKPX05D1;H2305X | 2 | 89 | 75 | 1.4 | 1.8 |
| UKX05D1;HE2305 | PX05D1 | C(CM)-UKPX05ED1;HE2305 | 5/64 | 3 1/2 | 2 15/16 | 3.1 | 4.0 |
| UKX06D1;H2306X | PX06D1 | C(CM)-UKPX06D1;H2306X | 2 | 99 | 80 | 1.7 | 2.2 |
| UKX06D1;HS2306 | PX06D1 | C(CM)-UKPX06SD1;HS2306 | 5/64 | 3 29/32 | 3 5/32 | 3.8 | 4.9 |
| UKX06D1;HE2306X | PX06D1 | C(CM)-UKPX06ED1;HE2306X | | | | | |
| UKX07D1;H2307X | PX07D1 | C(CM)-UKPX07D1;H2307X | 3 | 110 | 90 | 2.5 | 3.3 |
| UKX07D1;HS2307 | PX07D1 | C(CM)-UKPX07SD1;HS2307 | 1/8 | 4 11/32 | 3 17/32 | 5.5 | 7.3 |
| UKX08D1;H2308X | PX08D1 | C(CM)-UKPX08D1;H2308X | 3 | 118 | 95 | 3.2 | 4.1 |
| UKX08D1;HE2308X | PX08D1 | C(CM)-UKPX08ED1;HE2308X | 1/8 | 4 41/64 | 3 3/4 | 7.1 | 9.0 |
| UKX08D1;HS2308X | PX08D1 | C(CM)-UKPX08SD1;HS2308X | | | | | |
| UKX09D1;H2309X | PX09D1 | C(CM)-UKPX09D1;H2309X | 3 | 120 | 100 | 3.3 | 4.3 |
| UKX09D1;HA2309 | PX09D1 | C(CM)-UKPX09AD1;HA2309 | | | | | |
| UKX09D1;HE2309X | PX09D1 | C(CM)-UKPX09ED1;HE2309X | 1/8 | 4 23/32 | 3 15/16 | 7.3 | 9.5 |
| UKX09D1;HS2309X | PX09D1 | C(CM)-UKPX09SD1;HS2309X | | | | | |
| UKX10D1;H2310X | PX10D1 | C(CM)-UKPX10D1;H2310X | 3 | 130 | 100 | 4.2 | 5.4 |
| UKX10D1;HS2310 | PX10D1 | C(CM)-UKPX10SD1;HS2310 | | | | | |
| UKX10D1;HA2310 | PX10D1 | C(CM)-UKPX10AD1;HA2310 | 1/8 | 5 1/8 | 3 15/16 | 9.3 | 12 |
| UKX10D1;HE2310X | PX10D1 | C(CM)-UKPX10ED1;HE2310X | | | | | |
| UKX11D1;H2311X | PX11D1 | C(CM)-UKPX11D1;H2311X | 4 | 144 | 115 | 5.3 | 6.8 |
| UKX11D1;HS2311 | PX11D1 | C(CM)-UKPX11SD1;HS2311 | | | | | |
| UKX11D1;HA2311 | PX11D1 | C(CM)-UKPX11AD1;HA2311 | 5/32 | 5 21/32 | 4 17/32 | 12 | 15 |
| UKX11D1;HE2311XY | PX11D1 | C(CM)-UKPX11ED1;HE2311XY | | | | | |
| UKX12D1;H2312X | PX12D1 | C(CM)-UKPX12D1;H2312X | 4 | 155 | 120 | 6.8 | 8.6 |
| UKX12D1;HS2312 | PX12D1 | C(CM)-UKPX12SD1;HS2312 | 5/32 | 6 3/32 | 4 23/32 | 15 | 19 |
| UKX13D1;H2313X | PX13D1 | C(CM)-UKPX13D1;H2313X | 4 | 159 | 135 | 6.9 | 9.2 |
| UKX13D1;HA2313 | PX13D1 | C(CM)-UKPX13AD1;HA2313 | | | | | |
| UKX13D1;HE2313X | PX13D1 | C(CM)-UKPX13ED1;HE2313X | 5/32 | 1/4 | 5 5/16 | 15 | 20 |
| UKX13D1;HS2313X | PX13D1 | C(CM)-UKPX13SD1;HS2313X | | | | | |

## Pillow blocks cast housing
## Adapter type

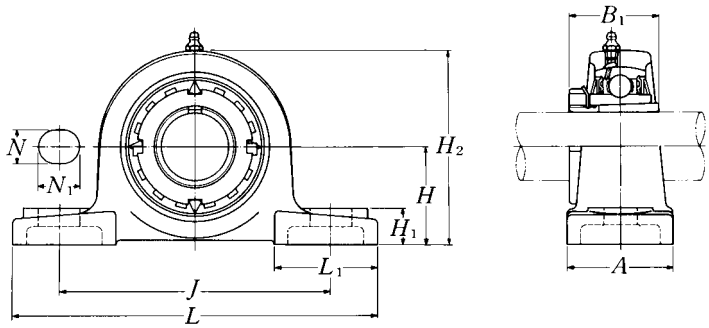


| Shaft dia. mm / inch | Unit number 1) 2) 3) | Nominal dimensions mm / inch H | L | J | A | N | N1 | H1 | H2 | B1 | L1 | Bolt size mm / inch |
|---|---|---|---|---|---|---|---|---|---|---|---|---|
| 65 | UKPX15D1;H2315X | 88.9 | 330 | 229 | 89 | 27 | 30 | 35 | 175 | 73 | 95 | M22 |
| 2 7/16 | UKPX15D1;HA2315 | 3 1/2 | 13 | 9 1/32 | 3 1/2 | 1 1/16 | 1 3/16 | 1 3/8 | 6 7/8 | 2.874 | 3 3/4 | 7/8 |
| 2 1/2 | UKPX15D1;HE2315X | | | | | | | | | | | |
| 70 | UKPX16D1;H2316X | 101.6 | 381 | 283 | 102 | 27 | 30 | 40 | 194 | 78 | 110 | M22 |
| 2 11/16 | UKPX16D1;HA2316 | 4 | 15 | 11 5/32 | 4 1/32 | 1 1/16 | 1 3/16 | 1 9/16 | 7 5/8 | 3.071 | 4 11/32 | 7/8 |
| 2 3/4 | UKPX16D1;HE2316X | | | | | | | | | | | |
| 75 | UKPX17D1;H2317X | 101.6 | 381 | 283 | 102 | 27 | 30 | 40 | 200 | 82 | 110 | M22 |
| 2 15/16 | UKPX17D1;HA2317X | 4 | 15 | 11 5/32 | 4 1/32 | 1 1/16 | 1 3/16 | 1 9/16 | 7 7/8 | 3.228 | 4 11/32 | 7/8 |
| 3 | UKPX17D1;HE2317X | | | | | | | | | | | |
| 80 | UKPX18D1;H2318X | 101.6 | 381 | 283 | 111 | 27 | 30 | 40 | 206 | 86 | 110 | M22 |
| 3 3/16 | UKPX18D1;HA2318X | 4 | 15 | 11 5/32 | 4 3/8 | 1 1/16 | 1 3/16 | 1 9/16 | 8 1/8 | 3.386 | 4 11/32 | 7/8 |
| 90 | UKPX20D1;H2320X | 127 | 432 | 337 | 121 | 33 | 36 | 45 | 244 | 97 | 125 | M27 |

Remarks: 1) These numbers indicate relubricatable type. If maintenance free type is needed, please order without suffix "D1".
2) Adapter number with suffix "X" means a narrow slot type adapter sleeve.
In this case the lock washer with the straight inner prong should be used.
3) For HE2311XY, screw thread pitch different from the standard is applied, because of the thin thread section of sleeve.
To distinguish it, a suffix "Y" is added.

Note: Please refer to page 36 for size of grease fitting.

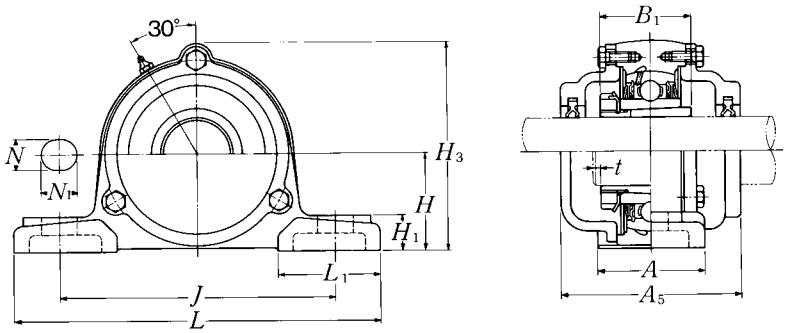


**Cast dust cover type**
Open end: **C-UKPX···D1**
Closed end: **CM-UKPX···D1**

| Bearing number 2) 3) | Housing 1) number | Unit number 1) 2) 3) cast dust cover type | Nominal dimensions mm / inch | | | Mass of unit kg / lb | |
|---|---|---|---|---|---|---|---|
| | | | $t$ | $H_3$ | $A_5$ | UKPX | C(CM) |
| UKX15D1;H2315X | PX15D1 | **C(CM)-UKPX15D1;H2315X** | 4 | 181 | 145 | 10 | 13 |
| UKX15D1;HA2315 | PX15D1 | **C(CM)-UKPX15AD1;HA2315** | 5/32 | 7 1/8 | 5 23/32 | 22 | 29 |
| UKX15D1;HE2315X | PX15D1 | **C(CM)-UKPX15ED1;HE2315X** | | | | | |
| UKX16D1;H2316X | PX16D1 | **C(CM)-UKPX16D1;H2316X** | 4 | 198 | 155 | 14 | 17 |
| UKX16D1;HA2316 | PX16D1 | **C(CM)-UKPX16AD1;HA2316** | 5/32 | 7 25/32 | 6 3/32 | 31 | 37 |
| UKX16D1;HE2316X | PX16D1 | **C(CM)-UKPX16ED1;HE2316X** | | | | | |
| UKX17D1;H2317X | PX17D1 | **C(CM)-UKPX17D1;H2317X** | 5 | 204 | 165 | 15 | 18 |
| UKX17D1;HA2317X | PX17D1 | **C(CM)-UKPX17AD1;HA2317X** | 13/64 | 8 1/32 | 6 1/2 | 33 | 40 |
| UKX17D1;HE2317X | PX17D1 | **C(CM)-UKPX17ED1;HE2317X** | | | | | |
| UKX18D1;H2318X | PX18D1 | **C(CM)-UKPX18D1;H2318X** | 5 | 208 | 180 | 16 | 20 |
| UKX18D1;HA2318X | PX18D1 | **C(CM)-UKPX18AD1;HA2318X** | 13/64 | 8 3/16 | 7 3/32 | 35 | 44 |
| UKX20D1;H2320X | PX20D1 | **C(CM)-UKPX20D1;H2320X** | 5 | 244 | 195 | 24 | 28 |

## Square flanged units cast housing
## Adapter type

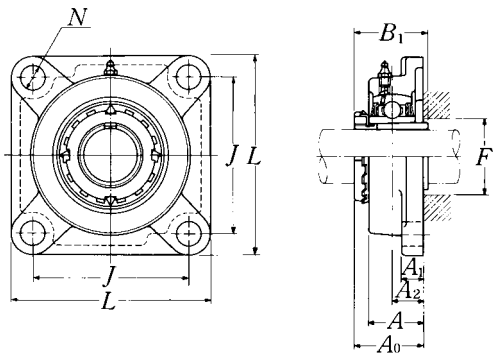


| Shaft dia. mm / inch | Unit number 1) 2) 3) | Nominal dimensions L | J | A2 | A1 (mm) | A (mm) | N (inch) | A0 | B1 | F min. | Bolt size mm / inch | Bearing number 2) 3) |
|---|---|---|---|---|---|---|---|---|---|---|---|---|
| 20 | UKF205D1;H2305X | 95 | 70 | 16 | 13 | 27 | 12 | 35.5 | 35 | 30 | M10 | UK205D1;H2305X |
| 3/4 | UKF205D1;HE2305 | 3 3/4 | 2 3/4 | 5/8 | 1/2 | 1 1/16 | 15/32 | 1 25/64 | 1.378 | 1 3/16 | 3/8 | UK205D1;HE2305 |
| 25 | UKF206D1;H2306X | 108 | 83 | 18 | 13 | 31 | 12 | 39 | 38 | 36 | M10 | UK206D1;H2306X |
| 7/8 | UKF206D1;HS2306 | 4 1/4 | 3 17/64 | 45/64 | 1/2 | 1 7/32 | 15/32 | 1 17/32 | 1.496 | 1 13/32 | 3/8 | UK206D1;HS2306 |
| 1 | UKF206D1;HE2306X | | | | | | | | | | | UK206D1;HE2306X |
| 30 | UKF207D1;H2307X | 117 | 92 | 19 | 15 | 34 | 14 | 42.5 | 43 | 40 | M12 | UK207D1;H2307X |
| 1 1/8 | UKF207D1;HS2307 | 4 19/32 | 3 5/8 | 3/4 | 19/32 | 1 11/32 | 35/64 | 1 43/64 | 1.693 | 1 9/16 | 7/16 | UK207D1;HS2307 |
| 35 | UKF208D1;H2308X | 130 | 102 | 21 | 15 | 36 | 16 | 46.5 | 46 | 46 | M14 | UK208D1;H2308X |
| 1 1/4 | UKF208D1;HE2308X | 5 1/8 | 4 1/64 | 53/64 | 19/32 | 1 13/32 | 5/8 | 1 53/64 | 1.811 | 1 13/16 | 1/2 | UK208D1;HE2308X |
| 1 3/8 | UKF208D1;HS2308X | | | | | | | | | | | UK208D1;HS2308X |
| 40 | UKF209D1;H2309X | 137 | 105 | 22 | 16 | 38 | 16 | 48.5 | 50 | 52 | M14 | UK209D1;H2309X |
| 1 7/16 | UKF209D1;HA2309 | | | | | | | | | | | UK209D1;HA2309 |
| 1 1/2 | UKF209D1;HE2309X | 5 13/32 | 4 9/64 | 55/64 | 5/8 | 1 1/2 | 5/8 | 1 29/32 | 1.969 | 2 1/16 | 1/2 | UK209D1;HE2309X |
| 1 5/8 | UKF209D1;HS2309X | | | | | | | | | | | UK209D1;HS2309X |
| 45 | UKF210D1;H2310X | 143 | 111 | 22 | 16 | 40 | 16 | 50 | 55 | 57 | M14 | UK210D1;H2310X |
| 1 5/8 | UKF210D1;HS2310 | | | | | | | | | | | UK210D1;HS2310 |
| 1 11/16 | UKF210D1;HA2310 | 5 5/8 | 4 3/8 | 55/64 | 5/8 | 1 9/16 | 5/8 | 1 31/32 | 2.165 | 2 1/4 | 1/2 | UK210D1;HA2310 |
| 1 3/4 | UKF210D1;HE2310X | | | | | | | | | | | UK210D1;HE2310X |
| 50 | UKF211D1;H2311X | 162 | 130 | 25 | 18 | 43 | 19 | 54.5 | 59 | 64 | M16 | UK211D1;H2311X |
| 1 7/8 | UKF211D1;HS2311 | | | | | | | | | | | UK211D1;HS2311 |
| 1 15/16 | UKF211D1;HA2311 | 6 3/8 | 5 1/8 | 63/64 | 23/32 | 1 11/16 | 3/4 | 2 9/64 | 2.323 | 2 17/32 | 5/8 | UK211D1;HA2311 |
| 2 | UKF211D1;HE2311XY | | | | | | | | | | | UK211D1;HE2311XY |
| 55 | UKF212D1;H2312X | 175 | 143 | 29 | 18 | 48 | 19 | 61 | 62 | 69 | M16 | UK212D1;H2312X |
| 2 1/8 | UKF212D1;HS2312 | 6 7/8 | 5 5/8 | 1 9/64 | 23/32 | 1 7/8 | 3/4 | 2 13/32 | 2.441 | 2 23/32 | 5/8 | UK212D1;HS2312 |
| 60 | UKF213D1;H2313X | 187 | 149 | 30 | 22 | 50 | 19 | 64 | 65 | 74 | M16 | UK213D1;H2313X |
| 2 3/16 | UKF213D1;HA2313 | | | | | | | | | | | UK213D1;HA2313 |
| 2 1/4 | UKF213D1;HE2313X | 7 3/8 | 5 55/64 | 1 3/16 | 7/8 | 1 31/32 | 3/4 | 2 33/64 | 2.559 | 2 29/32 | 5/8 | UK213D1;HE2313X |
| 2 3/8 | UKF213D1;HS2313X | | | | | | | | | | | UK213D1;HS2313X |

Remarks: 1) These numbers indicate relubricatable type. If maintenance free type is needed, please order without suffix "D1".
2) Adapter number with suffix "X" means a narrow slot type adapter sleeve.
In this case the lock washer with the straight inner prong should be used.
3) For HE2311XY, screw thread pitch different from the standard is applied, because of the thin thread section of sleeve.
To distinguish it, a suffix "Y" is added.
4) If the inch series housing units with dust cover are ordered with a closed end, the suffixes E, S or A are not included.
Example: SM-UKF205D1; HE2305

Note: Please refer to page 36 for size of grease fitting.

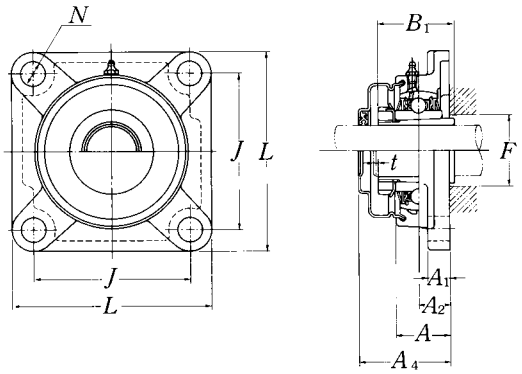


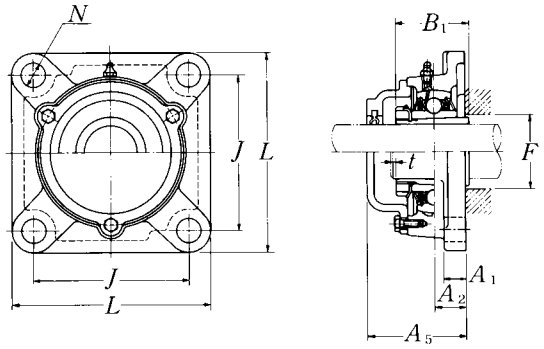


**Pressed steel dust cover type**
Open end: **S-UKF···D1**
Closed end: **SM-UKF···D1**

**Cast dust cover type**
Open end: **C-UKF···D1**
Closed end: **CM-UKF···D1**

| Housing[1)] number | Unit number [1) 2) 3) 4)] pressed steel dust cover type | Unit number [1) 2) 3) 4)] cast dust cover type | Nominal dimensions mm / inch: $t$ max. | $A_4$ | $A_5$ | Mass of unit kg / lb: UKF | S(SM) | C(CM) |
|---|---|---|---|---|---|---|---|---|
| F205D1 | S(SM)-UKF205D1;H2305X | C(CM)-UKF205D1;H2305X | 2 | 44.5 | 51 | 0.8 | 0.8 | 1.0 |
| F205D1 | S(SM)-UKF205ED1;HE2305 | C(CM)-UKF205ED1;HE2305 | 5/64 | 1 3/4 | 2 | 1.8 | 1.8 | 2.2 |
| F206D1 | S(SM)-UKF206D1;H2306X | C(CM)-UKF206D1;H2306X | 2 | 49 | 56 | 1.1 | 1.1 | 1.3 |
| F206D1 | S(SM)-UKF206SD1;HS2306 | C(CM)-UKF206SD1;HS2306 | 5/64 | 1 15/16 | 2 7/32 | 2.4 | 2.4 | 2.9 |
| F206D1 | S(SM)-UKF206ED1;HE2306X | C(CM)-UKF206ED1;HE2306X | | | | | | |
| F207D1 | S(SM)-UKF207D1;H2307X | C(CM)-UKF207D1;H2307X | 3 | 55 | 59 | 1.6 | 1.6 | 1.9 |
| F207D1 | S(SM)-UKF207SD1;HS2307 | C(CM)-UKF207SD1;HS2307 | 1/8 | 2 5/32 | 2 5/16 | 3.3 | 3.5 | 4.2 |
| F208D1 | S(SM)-UKF208D1;H2308X | C(CM)-UKF208D1;H2308X | 3 | 62 | 66 | 1.8 | 1.9 | 2.4 |
| F208D1 | S(SM)-UKF208ED1;HE2308X | C(CM)-UKF208ED1;HE2308X | 1/8 | 2 7/16 | 2 19/32 | 4.0 | 4.2 | 5.3 |
| F208D1 | S(SM)-UKF208SD1;HS2308X | C(CM)-UKF208SD1;HS2308X | | | | | | |
| F209D1 | S(SM)-UKF209D1;H2309X | C(CM)-UKF209D1;H2309X | 3 | 63 | 70 | 2.3 | 2.3 | 2.8 |
| F209D1 | S(SM)-UKF209AD1;HA2309 | C(CM)-UKF209AD1;HA2309 | | | | | | |
| F209D1 | S(SM)-UKF209ED1;HE2309X | C(CM)-UKF209ED1;HE2309X | 1/8 | 2 15/32 | 2 3/4 | 5.1 | 5.1 | 6.2 |
| F209D1 | S(SM)-UKF209SD1;HS2309X | C(CM)-UKF209SD1;HS2309X | | | | | | |
| F210D1 | S(SM)-UKF210D1;H2310X | C(CM)-UKF210D1;H2310X | 3 | 65.5 | 72 | 2.6 | 2.7 | 3.2 |
| F210D1 | S(SM)-UKF210SD1;HS2310 | C(CM)-UKF210SD1;HS2310 | | | | | | |
| F210D1 | S(SM)-UKF210AD1;HA2310 | C(CM)-UKF210AD1;HA2310 | 1/8 | 2 19/32 | 2 27/32 | 5.7 | 6.0 | 7.1 |
| F210D1 | S(SM)-UKF210ED1;HE2310X | C(CM)-UKF210ED1;HE2310X | | | | | | |
| F211D1 | S(SM)-UKF211D1;H2311X | C(CM)-UKF211D1;H2311X | 4 | 71 | 75 | 3.5 | 3.6 | 4.3 |
| F211D1 | S(SM)-UKF211SD1;HS2311 | C(CM)-UKF211SD1;HS2311 | | | | | | |
| F211D1 | S(SM)-UKF211AD1;HA2311 | C(CM)-UKF211AD1;HA2311 | 5/32 | 2 25/32 | 2 15/16 | 7.7 | 7.9 | 9.5 |
| F211D1 | S(SM)-UKF211ED1;HE2311XY | C(CM)-UKF211ED1;HE2311XY | | | | | | |
| F212D1 | S(SM)-UKF212D1;H2312X | C(CM)-UKF212D1;H2312X | 4 | 80 | 86 | 4.0 | 4.2 | 5.0 |
| F212D1 | S(SM)-UKF212SD1;HS2312 | C(CM)-UKF212SD1;HS2312 | 5/32 | 3 5/32 | 3 3/8 | 8.8 | 9.3 | 11 |
| F213D1 | S(SM)-UKF213D1;H2313X | C(CM)-UKF213D1;H2313X | 4 | 83.5 | 90 | 5.6 | 5.8 | 6.7 |
| F213D1 | S(SM)-UKF213AD1;HA2313 | C(CM)-UKF213AD1;HA2313 | | | | | | |
| F213D1 | S(SM)-UKF213ED1;HE2313X | C(CM)-UKF213ED1;HE2313X | 5/32 | 3 5/16 | 3 17/32 | 12 | 13 | 15 |
| F213D1 | S(SM)-UKF213SD1;HS2313X | C(CM)-UKF213SD1;HS2313X | | | | | | |

## Square flanged units cast housing
## Adapter type

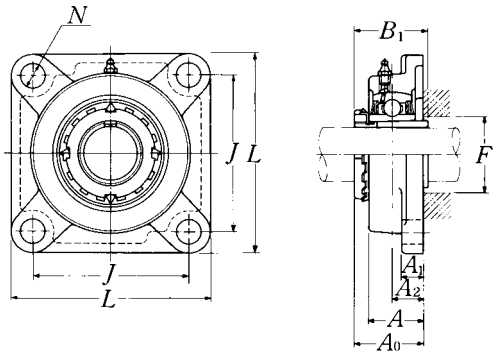


| Shaft dia. mm / inch | Unit number 1) 2) 3) | Nominal dimensions mm / inch L | J | A2 | A1 | A | N | A0 | B1 | F min. | Bolt size mm / inch | Bearing number 2) 3) |
|---|---|---|---|---|---|---|---|---|---|---|---|---|
| 65 | UKF215D1;H2315X | 200 | 159 | 34 | 22 | 56 | 19 | 71 | 73 | 84 | M16 | UK215D1;H2315X |
| 2 7/16 | UKF215D1;HA2315 | 7 7/8 | 6 17/64 | 1 11/32 | 7/8 | 2 7/32 | 3/4 | 2 51/64 | 2.874 | 3 5/16 | 5/8 | UK215D1;HA2315 |
| 2 1/2 | UKF215D1;HE2315X | | | | | | | | | | | UK215D1;HE2315X |
| 70 | UKF216D1;H2316X | 208 | 165 | 34 | 22 | 58 | 23 | 73.5 | 78 | 90 | M20 | UK216D1;H2316X |
| 2 11/16 | UKF216D1;HA2316 | 8 3/16 | 6 1/2 | 1 11/32 | 7/8 | 2 9/32 | 29/32 | 2 57/64 | 3.071 | 3 17/32 | 3/4 | UK216D1;HA2316 |
| 2 3/4 | UKF216D1;HE2316X | | | | | | | | | | | UK216D1;HE2316X |
| 75 | UKF217D1;H2317X | 220 | 175 | 36 | 24 | 63 | 23 | 77 | 82 | 95 | M20 | UK217D1;H2317X |
| 2 15/16 | UKF217D1;HA2317X | 8 21/32 | 6 57/64 | 1 27/64 | 15/16 | 2 15/32 | 29/32 | 3 1/32 | 3.228 | 3 3/4 | 3/4 | UK217D1;HA2317X |
| 3 | UKF217D1;HE2317X | | | | | | | | | | | UK217D1;HE2317X |
| 80 | UKF218D1;H2318X | 235 | 187 | 40 | 24 | 68 | 23 | 81.5 | 86 | 102 | M20 | UK218D1;H2318X |
| 3 3/16 | UKF218D1;HA2318X | 9 1/4 | 7 23/64 | 1 37/64 | 15/16 | 2 11/16 | 29/32 | 3 13/64 | 3.386 | 4 1/32 | 3/4 | UK218D1;HA2318X |

Remarks: 1) These numbers indicate relubricatable type. If maintenance free type is needed, please order without suffix "D1".
2) Adapter number with suffix "X" means a narrow slot type adapter sleeve.
In this case the lock washer with the straight inner prong should be used.
3) For HE2311XY, screw thread pitch different from the standard is applied, because of the thin thread section of sleeve.
To distinguish it, a suffix "Y" is added.
4) If the inch series housing units with dust cover are ordered with a closed end, the suffixes E, S or A are not included.
Example: SM-UKF205D1; HE2305

Note: Please refer to page 36 for size of grease fitting.

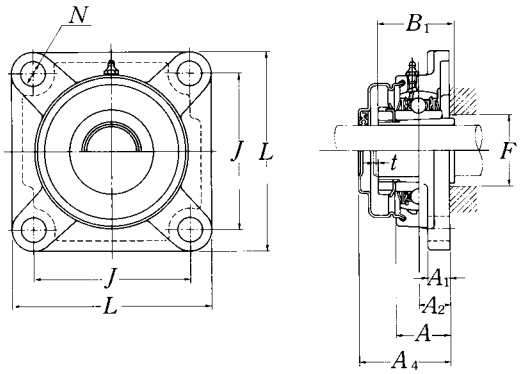


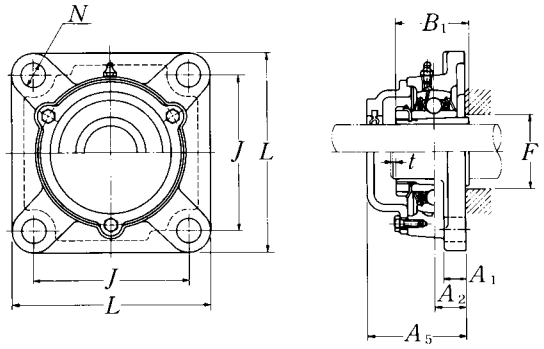


**Pressed steel dust cover type**
Open end: **S-UKF···D1**
Closed end: **SM-UKF···D1**

**Cast dust cover type**
Open end: **C-UKF···D1**
Closed end: **CM-UKF···D1**

| Housing[1)] number | Unit number [1) 2) 3) 4)] pressed steel dust cover type | Unit number [1) 2) 3) 4)] cast dust cover type | Nominal dimensions mm $t$ max. | $A_4$ | inch $A_5$ | Mass of unit kg UKF | S(SM) | lb C(CM) |
|---|---|---|---|---|---|---|---|---|
| F215D1 | — | C(CM)-UKF215D1;H2315X | 4 | — | 102 | 6.8 | — | 8.3 |
| F215D1 | — | C(CM)-UKF215AD1;HA2315 | 5/32 | — | 4 1/32 | 15 | — | 18 |
| F215D1 | | C(CM)-UKF215ED1;HE2315X | | | | | | |
| F216D1 | — | C(CM)-UKF216D1;H2316X | 4 | — | 106 | 8.3 | — | 10 |
| F216D1 | — | C(CM)-UKF216AD1;HA2316 | 5/32 | — | 4 3/16 | 18 | — | 22 |
| F216D1 | | C(CM)-UKF216ED1;HE2316X | | | | | | |
| F217D1 | — | C(CM)-UKF217D1;H2317X | 5 | — | 114 | 10 | — | 13 |
| F217D1 | — | C(CM)-UKF217AD1;HA2317X | 13/64 | — | 4 1/2 | 22 | — | 29 |
| F217D1 | | C(CM)-UKF217ED1;HE2317X | | | | | | |
| F218D1 | — | C(CM)-UKF218D1;H2318X | 5 | — | 122 | 12 | — | 14 |
| F218D1 | — | C(CM)-UKF218AD1;HA2318X | 13/64 | — | 4 13/16 | 26 | — | 31 |

## Square flanged units cast housing
## Adapter type

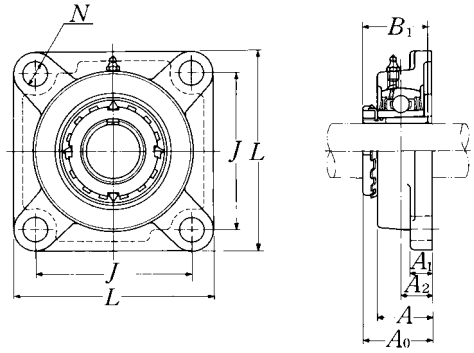


| Shaft dia. mm / inch | Unit number 1) 2) 3) | Nominal dimensions L | J | A2 | A1 (mm) | A (inch) | N | A0 | B1 | Bolt size mm / inch | Bearing number 2) 3) |
|---|---|---|---|---|---|---|---|---|---|---|---|
| 20 | UKF305D1;H2305X | 110 | 80 | 16 | 13 | 29 | 16 | 37 | 35 | M14 | UK305D1;H2305X |
| 3/4 | UKF305D1;HE2305 | 4 11/32 | 3 5/32 | 5/8 | 1/2 | 1 5/32 | 5/8 | 1 29/64 | 1.378 | 1/2 | UK305D1;HE2305 |
| 25 | UKF306D1;H2306X | 125 | 95 | 18 | 15 | 32 | 16 | 40.5 | 38 | M14 | UK306D1;H2306X |
| 7/8 | UKF306D1;HS2306 | 4 29/32 | 3 47/64 | 45/64 | 19/32 | 1 1/4 | 5/8 | 1 19/32 | 1.496 | 1/2 | UK306D1;HS2306 |
| 1 | UKF306D1;HE2306X | | | | | | | | | | UK306D1;HE2306X |
| 30 | UKF307D1;H2307X | 135 | 100 | 20 | 16 | 36 | 19 | 45.5 | 43 | M16 | UK307D1;H2307X |
| 1 1/8 | UKF307D1;HS2307 | 5 5/16 | 3 15/16 | 25/32 | 5/8 | 1 13/32 | 3/4 | 1 51/64 | 1.693 | 5/8 | UK307D1;HS2307 |
| 35 | UKF308D1;H2308X | 150 | 112 | 23 | 17 | 40 | 19 | 50 | 46 | M16 | UK308D1;H2308X |
| 1 1/4 | UKF308D1;HE2308X | 5 29/32 | 4 13/32 | 29/32 | 21/32 | 1 9/16 | 3/4 | 1 31/32 | 1.811 | 5/8 | UK308D1;HE2308X |
| 1 3/8 | UKF308D1;HS2308X | | | | | | | | | | UK308D1;HS2308X |
| 40 | UKF309D1;H2309X | 160 | 125 | 25 | 18 | 44 | 19 | 54.5 | 50 | M16 | UK309D1;H2309X |
| 1 7/16 | UKF309D1;HA2309 | | | | | | | | | | UK309D1;HA2309 |
| 1 1/2 | UKF309D1;HE2309X | 6 5/16 | 4 59/64 | 63/64 | 23/32 | 1 23/32 | 3/4 | 2 9/64 | 1.969 | 5/8 | UK309D1;HE2309X |
| 1 5/8 | UKF309D1;HS2309X | | | | | | | | | | UK309D1;HS2309X |
| 45 | UKF310D1;H2310X | 175 | 132 | 28 | 19 | 48 | 23 | 60.5 | 55 | M20 | UK310D1;H2310X |
| 1 5/8 | UKF310D1;HS2310 | | | | | | | | | | UK310D1;HS2310 |
| 1 11/16 | UKF310D1;HA2310 | 6 7/8 | 5 13/64 | 1 7/64 | 3/4 | 1 7/8 | 29/32 | 2 3/8 | 2.165 | 3/4 | UK310D1;HA2310 |
| 1 3/4 | UKF310D1;HE2310X | | | | | | | | | | UK310D1;HE2310X |
| 50 | UKF311D1;H2311X | 185 | 140 | 30 | 20 | 52 | 23 | 64 | 59 | M20 | UK311D1;H2311X |
| 1 7/8 | UKF311D1;HS2311 | | | | | | | | | | UK311D1;HS2311 |
| 1 15/16 | UKF311D1;HA2311 | 7 9/32 | 5 33/64 | 1 3/16 | 25/32 | 2 1/16 | 29/32 | 2 33/64 | 2.323 | 3/4 | UK311D1;HA2311 |
| 2 | UKF311D1;HE2311XY | | | | | | | | | | UK311D1;HE2311XY |
| 55 | UKF312D1;H2312X | 195 | 150 | 33 | 22 | 56 | 23 | 69.5 | 62 | M20 | UK312D1;H2312X |
| 2 1/8 | UKF312D1;HS2312 | 7 11/16 | 5 29/32 | 1 19/64 | 7/8 | 2 7/32 | 29/32 | 2 47/64 | 2.441 | 3/4 | UK312D1;HS2312 |
| 60 | UKF313D1;H2313X | 208 | 166 | 33 | 22 | 58 | 23 | 71.5 | 65 | M20 | UK313D1;H2313X |
| 2 3/16 | UKF313D1;HA2313 | | | | | | | | | | UK313D1;HA2313 |
| 2 1/4 | UKF313D1;HE2313X | 8 3/16 | 6 17/32 | 1 19/64 | 7/8 | 2 9/32 | 29/32 | 2 13/16 | 2.559 | 3/4 | UK313D1;HE2313X |
| 2 3/8 | UKF313D1;HS2313X | | | | | | | | | | UK313D1;HS2313X |

Remarks: 1) These numbers indicate relubricatable type. If maintenance free type is needed, please order without suffix "D1".
2) Adapter number with suffix "X" means a narrow slot type adapter sleeve.
In this case the lock washer with the straight inner prong should be used.
3) For HE2311XY, screw thread pitch different from the standard is applied, because of the thin thread section of sleeve.
To distinguish it, a suffix "Y" is added.
4) If the inch series housing units with dust cover are ordered with a closed end, the suffixes E, S or A are not included.
Example: CM-UKF305D1; HE2305

Note: Please refer to page 36 for size of grease fitting.

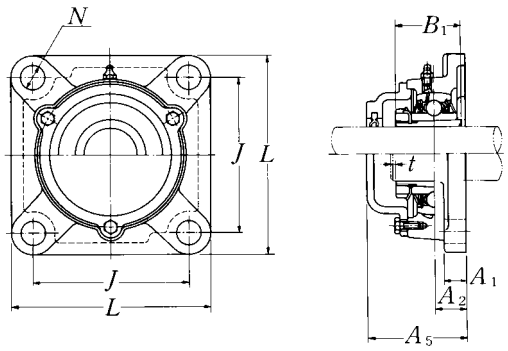


**Cast dust cover type**
Open end: **C-UKF···D1**
Closed end: **CM-UKF···D1**

| Housing number 1) | Unit number 1) 2) 3) 4) cast dust cover type | Nominal dimensions mm $t$ max. | Nominal dimensions inch $A_5$ | Mass of unit kg UKF | Mass of unit lb C(CM) |
|---|---|---|---|---|---|
| F305D1 | C(CM)-UKF305D1;H2305X | 2 | 56 | 1.1 | 1.5 |
| F305D1 | C(CM)-UKF305ED1;HE2305 | 5/64 | 2 7/32 | 2.4 | 3.3 |
| F306D1 | C(CM)-UKF306D1;H2306X | 2 | 60 | 1.7 | 2.1 |
| F306D1 | C(CM)-UKF306SD1;HS2306 | 5/64 | 2 3/8 | 3.8 | 4.6 |
| F306D1 | C(CM)-UKF306ED1;HE2306X | | | | |
| F307D1 | C(CM)-UKF307D1;H2307X | 3 | 68 | 2.1 | 2.7 |
| F307D1 | C(CM)-UKF307SD1;HS2307 | 1/8 | 2 11/16 | 4.6 | 6.0 |
| F308D1 | C(CM)-UKF308D1;H2308X | 3 | 76 | 2.8 | 3.5 |
| F308D1 | C(CM)-UKF308ED1;HE2308X | 1/8 | 3 | 6.2 | 7.7 |
| F308D1 | C(CM)-UKF308SD1;HS2308X | | | | |
| F309D1 | C(CM)-UKF309D1;H2309X | 3 | 80 | 3.4 | 4.4 |
| F309D1 | C(CM)-UKF309AD1;HA2309 | | | | |
| F309D1 | C(CM)-UKF309ED1;HE2309X | 1/8 | 3 5/32 | 7.5 | 9.7 |
| F309D1 | C(CM)-UKF309SD1;HS2309X | | | | |
| F310D1 | C(CM)-UKF310D1;H2310X | 3 | 88 | 4.5 | 5.9 |
| F310D1 | C(CM)-UKF310SD1;HS2310 | | | | |
| F310D1 | C(CM)-UKF310AD1;HA2310 | 1/8 | 3 15/32 | 9.9 | 13 |
| F310D1 | C(CM)-UKF310ED1;HE2310X | | | | |
| F311D1 | C(CM)-UKF311D1;H2311X | 4 | 92 | 5.3 | 6.8 |
| F311D1 | C(CM)-UKF311SD1;HS2311 | | | | |
| F311D1 | C(CM)-UKF311AD1;HA2311 | 5/32 | 3 5/8 | 12 | 15 |
| F311D1 | C(CM)-UKF311ED1;HE2311XY | | | | |
| F312D1 | C(CM)-UKF312D1;H2312X | 4 | 100 | 6.3 | 7.9 |
| F312D1 | C(CM)-UKF312SD1;HS2312 | 5/32 | 3 15/16 | 14 | 17 |
| F313D1 | C(CM)-UKF313D1;H2313X | 4 | 103 | 7.8 | 9.6 |
| F313D1 | C(CM)-UKF313AD1;HA2313 | | | | |
| F313D1 | C(CM)-UKF313ED1;HE2313X | 5/32 | 4 1/16 | 17 | 21 |
| F313D1 | C(CM)-UKF313SD1;HS2313X | | | | |

## Square flanged units cast housing
## Adapter type

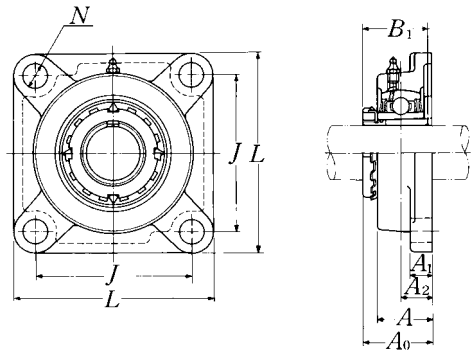


| Shaft dia. mm / inch | Unit number 1) 2) 3) | Nominal dimensions mm / inch: L | J | A2 | A1 | A | N | A0 | B1 | Bolt size mm / inch | Bearing number 2) 3) |
|---|---|---|---|---|---|---|---|---|---|---|---|
| 65<br>2 7/16<br>2 1/2 | UKF315D1;H2315X<br>UKF315D1;HA2315<br>UKF315D1;HE2315X | 236<br>9 9/32 | 184<br>7 1/4 | 39<br>1 17/32 | 25<br>31/32 | 66<br>2 19/32 | 25<br>63/64 | 81.5<br>3 13/64 | 73<br>2.874 | M22<br>7/8 | UK315D1;H2315X<br>UK315D1;HA2315<br>UK315D1;HE2315X |
| 70<br>2 11/16<br>2 3/4 | UKF316D1;H2316X<br>UKF316D1;HA2316<br>UKF316D1;HE2316X | 250<br>9 27/32 | 196<br>7 23/32 | 38<br>1 1/2 | 27<br>1 1/16 | 68<br>2 11/16 | 31<br>1 7/32 | 84<br>3 5/16 | 78<br>3.071 | M27<br>1 | UK316D1;H2316X<br>UK316D1;HA2316<br>UK316D1;HE2316X |
| 75<br>2 15/16<br>3 | UKF317D1;H2317X<br>UKF317D1;HA2317X<br>UKF317D1;HE2317X | 260<br>10 1/4 | 204<br>8 1/32 | 44<br>1 47/64 | 27<br>1 1/16 | 74<br>2 29/32 | 31<br>1 7/32 | 92<br>3 5/8 | 82<br>3.228 | M27<br>1 | UK317D1;H2317X<br>UK317D1;HA2317X<br>UK317D1;HE2317X |
| 80<br>3 3/16 | UKF318D1;H2318X<br>UKF318D1;HA2318X | 280<br>11 1/32 | 216<br>8 1/2 | 44<br>1 47/64 | 30<br>1 3/16 | 76<br>3 | 35<br>1 3/8 | 94<br>3 45/64 | 86<br>3.386 | M30<br>1 1/8 | UK318D1;H2318X<br>UK318D1;HA2318X |
| 85<br>3 1/4 | UKF319D1;H2319X<br>UKF319D1;HE2319X | 290<br>11 13/32 | 228<br>8 31/32 | 59<br>2 21/64 | 30<br>1 3/16 | 94<br>3 11/16 | 35<br>1 3/8 | 111.5<br>4 25/64 | 90<br>3.543 | M30<br>1 1/8 | UK319D1;H2319X<br>UK319D1;HE2319X |
| 90<br>3 7/16<br>3 1/2 | UKF320D1;H2320X<br>UKF320D1;HA2320<br>UKF320D1;HE2320X | 310<br>12 7/32 | 242<br>9 17/32 | 59<br>2 21/64 | 32<br>1 1/4 | 94<br>3 11/16 | 38<br>1 1/2 | 115.5<br>4 35/64 | 97<br>3.819 | M33<br>1 1/4 | UK320D1;H2320X<br>UK320D1;HA2320<br>UK320D1;HE2320X |
| 100 | UKF322D1;H2322X | 340 | 266 | 60 | 35 | 96 | 41 | 121 | 105 | M36 | UK322D1;H2322X |
| 110 | UKF324D1;H2324X | 370 | 290 | 65 | 40 | 110 | 41 | 130 | 112 | M36 | UK324D1;H2324X |
| 115 | UKF326D1;H2326 | 410 | 320 | 65 | 45 | 115 | 41 | 133 | 121 | M36 | UK326D1;H2326 |
| 125 | UKF328D1;H2328 | 450 | 350 | 75 | 55 | 125 | 41 | 146.5 | 131 | M36 | UK328D1;H2328 |

Remarks: 1) These numbers indicate relubricatable type. If maintenance free type is needed, please order without suffix "D1".
2) Adapter number with suffix "X" means a narrow slot type adapter sleeve.
In this case the lock washer with the straight inner prong should be used.
3) For HE2311XY, screw thread pitch different from the standard is applied, because of the thin thread section of sleeve.
To distinguish it, a suffix "Y" is added.
4) If the inch series housing units with dust cover are ordered with a closed end, the suffixes E, S or A are not included.
Example: CM-UKF305D1; HE2305

Note: Please refer to page 36 for size of grease fitting.

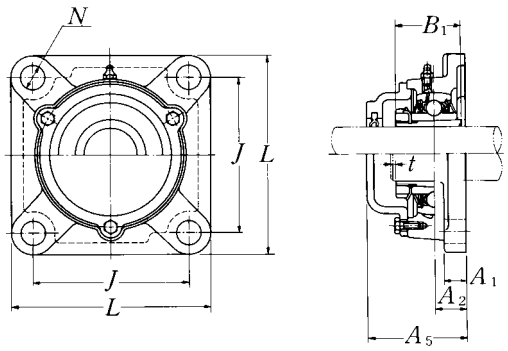


**Cast dust cover type**
Open end: **C-UKF···D1**
Closed end: **CM-UKF···D1**

| Housing number 1) | Unit number 1) 2) 3) 4) cast dust cover type | Nominal dimensions mm $t$ max. | Nominal dimensions inch $A_5$ | Mass of unit kg UKF | Mass of unit lb C(CM) |
|---|---|---|---|---|---|
| F315D1 | C(CM)-UKF315D1;H2315X | 4 | 114 | 11 | 13 |
| F315D1 | C(CM)-UKF315AD1;HA2315 | 5/32 | 4 1/2 | 24 | 29 |
| F315D1 | C(CM)-UKF315ED1;HE2315X | | | | |
| F316D1 | C(CM)-UKF316D1;H2316X | 4 | 116 | 14 | 16 |
| F316D1 | C(CM)-UKF316AD1;HA2316 | 5/32 | 4 9/16 | 31 | 35 |
| F316D1 | C(CM)-UKF316ED1;HE2316X | | | | |
| F317D1 | C(CM)-UKF317D1;H2317X | 5 | 129 | 15 | 19 |
| F317D1 | C(CM)-UKF317AD1;HA2317X | 13/64 | 5 3/32 | 33 | 42 |
| F317D1 | C(CM)-UKF317ED1;HE2317X | | | | |
| F318D1 | C(CM)-UKF318D1;H2318X | 5 | 129 | 19 | 23 |
| F318D1 | C(CM)-UKF318AD1;HA2318X | 13/64 | 5 3/32 | 42 | 51 |
| F319D1 | C(CM)-UKF319D1;H2319X | 5 | 149 | 22 | 26 |
| F319D1 | C(CM)-UKF319ED1;HE2319X | 13/64 | 5 7/8 | 49 | 57 |
| F320D1 | C(CM)-UKF320D1;H2320X | 5 | 154 | 27 | 32 |
| F320D1 | C(CM)-UKF320AD1;HA2320 | 13/64 | 6 1/16 | 60 | 71 |
| F320D1 | C(CM)-UKF320ED1;HE2320X | | | | |
| F322D1 | C(CM)-UKF322D1;H2322X | 5 | 160 | 35 | 41 |
| F324D1 | C(CM)-UKF324D1;H2324X | 5 | 172 | 48 | 56 |
| F326D1 | C(CM)-UKF326D1;H2326 | 6 | 178 | 63 | 75 |
| F328D1 | C(CM)-UKF328D1;H2328 | 6 | 192 | 90 | 101 |

## Square flanged units cast housing
## Adapter type

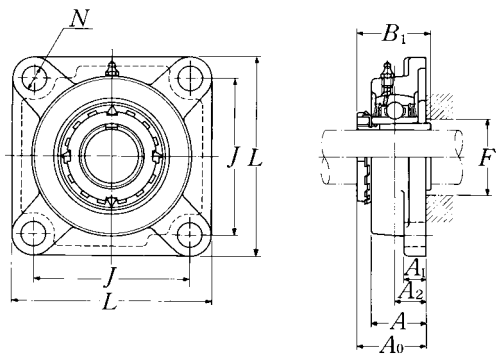


| Shaft dia. mm / inch | Unit number 1) 2) 3) | Nominal dimensions mm / inch L | J | A2 | A1 | A | N | A0 | B1 | F min. | Bolt size mm / inch | Bearing number 2) 3) |
|---|---|---|---|---|---|---|---|---|---|---|---|---|
| 20 | UKFX05D1;H2305X | 108 | 83 | 18 | 13 | 30 | 12 | 39 | 35 | 30 | M10 | UKX05D1;H2305X |
| 3/4 | UKFX05D1;HE2305 | 4 1/4 | 3 17/64 | 45/64 | 1/2 | 1 3/16 | 15/32 | 1 17/32 | 1.378 | 1 3/16 | 3/8 | UKX05D1;HE2305 |
| 25 | UKFX06D1;H2306X | 117 | 92 | 19 | 14 | 34 | 16 | 41.5 | 38 | 36 | M14 | UKX06D1;H2306X |
| 7/8 | UKFX06D1;HS2306 | 4 19/32 | 3 5/8 | 3/4 | 9/16 | 1 11/32 | 5/8 | 1 41/64 | 1.496 | 1 13/32 | 1/2 | UKX06D1;HS2306 |
| 1 | UKFX06D1;HE2306X | | | | | | | | | | | UKX06D1;HE2306X |
| 30 | UKFX07D1;H2307X | 130 | 102 | 21 | 14 | 38 | 16 | 45.5 | 43 | 40 | M14 | UKX07D1;H2307X |
| 1 1/8 | UKFX07D1;HS2307 | 5 1/8 | 4 1/64 | 53/64 | 9/16 | 1 1/2 | 5/8 | 1 51/64 | 1.693 | 1 9/16 | 1/2 | UKX07D1;HS2307 |
| 35 | UKFX08D1;H2308X | 137 | 105 | 22 | 14 | 40 | 19 | 47.5 | 46 | 46 | M16 | UKX08D1;H2308X |
| 1 1/4 | UKFX08D1;HE2308X | 5 13/32 | 4 9/64 | 55/64 | 9/16 | 1 9/16 | 3/4 | 1 7/8 | 1.811 | 1 13/16 | 5/8 | UKX08D1;HE2308X |
| 1 3/8 | UKFX08D1;HS2308X | | | | | | | | | | | UKX08D1;HS2308X |
| 40 | UKFX09D1;H2309X | 143 | 111 | 23 | 14 | 40 | 19 | 50 | 50 | 52 | M16 | UKX09D1;H2309X |
| 1 7/16 | UKFX09D1;HA2309 | | | | | | | | | | | UKX09D1;HA2309 |
| 1 1/2 | UKFX09D1;HE2309X | 5 5/8 | 4 3/8 | 29/32 | 9/16 | 1 9/16 | 3/4 | 1 31/32 | 1.969 | 2 1/16 | 5/8 | UKX09D1;HE2309X |
| 1 5/8 | UKFX09D1;HS2309X | | | | | | | | | | | UKX09D1;HS2309X |
| 45 | UKFX10D1;H2310X | 162 | 130 | 26 | 20 | 44 | 19 | 55.5 | 55 | 57 | M16 | UKX10D1;H2310X |
| 1 5/8 | UKFX10D1;HS2310 | | | | | | | | | | | UKX10D1;HS2310 |
| 1 11/16 | UKFX10D1;HA2310 | 6 3/8 | 5 1/8 | 1 1/32 | 25/32 | 1 23/32 | 3/4 | 2 3/16 | 2.165 | 2 1/4 | 5/8 | UKX10D1;HA2310 |
| 1 3/4 | UKFX10D1;HE2310X | | | | | | | | | | | UKX10D1;HE2310X |
| 50 | UKFX11D1;H2311X | 175 | 143 | 29 | 20 | 49 | 19 | 60 | 59 | 64 | M16 | UKX11D1;H2311X |
| 1 7/8 | UKFX11D1;HS2311 | | | | | | | | | | | UKX11D1;HS2311 |
| 1 15/16 | UKFX11D1;HA2311 | 6 7/8 | 5 5/8 | 1 9/64 | 25/32 | 1 15/16 | 3/4 | 2 23/64 | 2.323 | 2 17/32 | 5/8 | UKX11D1;HA2311 |
| 2 | UKFX11D1;HE2311XY | | | | | | | | | | | UKX11D1;HE2311XY |
| 55 | UKFX12D1;H2312X | 187 | 149 | 34 | 21 | 59 | 19 | 67 | 62 | 69 | M16 | UKX12D1;H2312X |
| 2 1/8 | UKFX12D1;HS2312 | 7 3/8 | 5 55/64 | 1 11/32 | 13/16 | 2 5/16 | 3/4 | 2 41/64 | 2.441 | 2 23/32 | 5/8 | UKX12D1;HS2312 |
| 60 | UKFX13D1;H2313X | 187 | 149 | 34 | 21 | 59 | 19 | 69 | 65 | 74 | M16 | UKX13D1;H2313X |
| 2 3/16 | UKFX13D1;HA2313 | | | | | | | | | | | UKX13D1;HA2313 |
| 2 1/4 | UKFX13D1;HE2313X | 7 3/8 | 5 55/64 | 1 11/32 | 13/16 | 2 5/16 | 3/4 | 2 23/32 | 2.559 | 2 29/32 | 5/8 | UKX13D1;HE2313X |
| 2 3/8 | UKFX13D1;HS2313X | | | | | | | | | | | UKX13D1;HS2313X |

Remarks: 1) These numbers indicate relubricatable type. If maintenance free type is needed, please order without suffix "D1".
2) Adapter number with suffix "X" means a narrow slot type adapter sleeve.
In this case the lock washer with the straight inner prong should be used.
3) For HE2311XY, screw thread pitch different from the standard is applied, because of the thin thread section of sleeve.
To distinguish it, a suffix "Y" is added.
4) If the inch series housing units with dust cover are ordered with a closed end, the suffixes E, S or A are not included.
Example: CM-UKFX05D1; HE2305

Note: Please refer to page 36 for size of grease fitting.

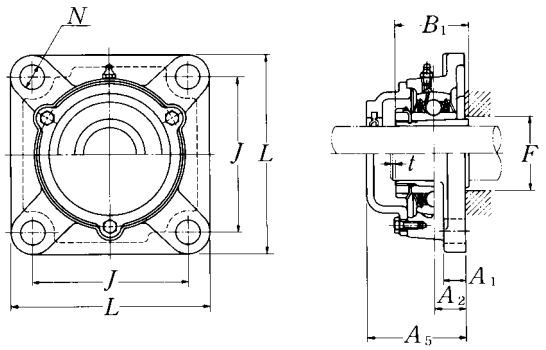


**Cast dust cover type**
Open end: **C-UKFX···D1**
Closed end: **CM-UKFX···D1**

| Housing number 1) | Unit number 1) 2) 3) 4) cast dust cover type | Nominal dimensions mm $t$ | Nominal dimensions inch $A_5$ | Mass of unit kg UKFX | Mass of unit lb C(CM) |
|---|---|---|---|---|---|
| FX05D1 | C(CM)-UKFX05D1;H2305X | 2 | 56 | 1.1 | 1.3 |
| FX05D1 | C(CM)-UKFX05ED1;HE2305 | 5/64 | 2 7/32 | 2.4 | 2.9 |
| FX06D1 | C(CM)-UKFX06D1;H2306X | 2 | 59 | 1.6 | 1.8 |
| FX06D1 | C(CM)-UKFX06SD1;HS2306 | 5/64 | 2 5/16 | 3.5 | 4.0 |
| FX06D1 | C(CM)-UKFX06ED1;HE2306X | | | | |
| FX07D1 | C(CM)-UKFX07D1;H2307X | 3 | 66 | 2.1 | 2.5 |
| FX07D1 | C(CM)-UKFX07SD1;HS2307 | 1/8 | 2 19/32 | 4.6 | 5.5 |
| FX08D1 | C(CM)-UKFX08D1;H2308X | 3 | 70 | 2.5 | 2.9 |
| FX08D1 | C(CM)-UKFX08ED1;HE2308X | 1/8 | 2 3/4 | 5.5 | 6.4 |
| FX08D1 | C(CM)-UKFX08SD1;HS2308X | | | | |
| FX09D1 | C(CM)-UKFX09D1;H2309X | 3 | 73 | 2.5 | 3.0 |
| FX09D1 | C(CM)-UKFX09AD1;HA2309 | | | | |
| FX09D1 | C(CM)-UKFX09ED1;HE2309X | 1/8 | 2 7/8 | 5.5 | 6.6 |
| FX09D1 | C(CM)-UKFX09SD1;HS2309X | | | | |
| FX10D1 | C(CM)-UKFX10D1;H2310X | 3 | 76 | 3.8 | 4.4 |
| FX10D1 | C(CM)-UKFX10SD1;HS2310 | | | | |
| FX10D1 | C(CM)-UKFX10AD1;HA2310 | 1/8 | 3 | 8.4 | 9.7 |
| FX10D1 | C(CM)-UKFX10ED1;HE2310X | | | | |
| FX11D1 | C(CM)-UKFX11D1;H2311X | 4 | 86 | 4.7 | 5.4 |
| FX11D1 | C(CM)-UKFX11SD1;HS2311 | | | | |
| FX11D1 | C(CM)-UKFX11AD1;HA2311 | 5/32 | 3 3/8 | 10 | 12 |
| FX11D1 | C(CM)-UKFX11ED1;HE2311XY | | | | |
| FX12D1 | C(CM)-UKFX12D1;H2312X | 4 | 94 | 6.4 | 7.2 |
| FX12D1 | C(CM)-UKFX12SD1;HS2312 | 5/32 | 3 11/16 | 14 | 16 |
| FX13D1 | C(CM)-UKFX13D1;H2313X | 4 | 101 | 6.4 | 7.6 |
| FX13D1 | C(CM)-UKFX13AD1;HA2313 | | | | |
| FX13D1 | C(CM)-UKFX13ED1;HE2313X | 5/32 | 3 31/32 | 14 | 17 |
| FX13D1 | C(CM)-UKFX13SD1;HS2313X | | | | |

## Square flanged units cast housing
## Adapter type

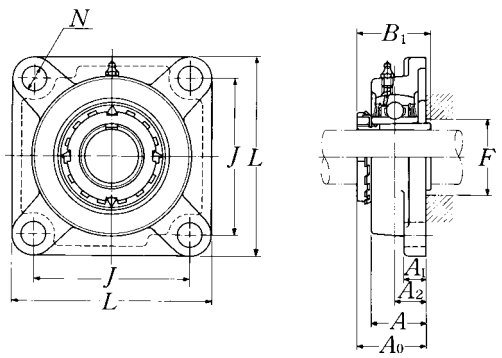


| Shaft dia. mm / inch | Unit number 1) 2) 3) | Nominal dimensions mm / inch: L | J | A2 | A1 | A | N | A0 | B1 | F min. | Bolt size mm / inch | Bearing number 2) 3) |
|---|---|---|---|---|---|---|---|---|---|---|---|---|
| 65<br>2 7/16<br>2 1/2 | UKFX15D1;H2315X<br>UKFX15D1;HA2315<br>UKFX15D1;HE2315X | 197<br>7 3/4 | 152<br>5 63/64 | 40<br>1 37/64 | 24<br>15/16 | 68<br>2 11/16 | 23<br>29/32 | 77.5<br>3 3/64 | 73<br>2.874 | 84<br>3 5/16 | M20<br>3/4 | UKX15D1;H2315X<br>UKX15D1;HA2315<br>UKX15D1;HE2315X |
| 70<br>2 11/16<br>2 3/4 | UKFX16D1;H2316X<br>UKFX16D1;HA2316<br>UKFX16D1;HE2316X | 214<br>8 7/16 | 171<br>6 47/64 | 40<br>1 37/64 | 24<br>15/16 | 70<br>2 3/4 | 23<br>29/32 | 80<br>3 5/32 | 78<br>3.071 | 90<br>3 17/32 | M20<br>3/4 | UKX16D1;H2316X<br>UKX16D1;HA2316<br>UKX16D1;HE2316X |
| 75<br>2 15/16<br>3 | UKFX17D1;H2317X<br>UKFX17D1;HA2317X<br>UKFX17D1;HE2317X | 214<br>8 7/16 | 171<br>6 47/64 | 40<br>1 37/64 | 24<br>15/16 | 70<br>2 3/4 | 23<br>29/32 | 81.5<br>3 13/64 | 82<br>3.228 | 95<br>3 3/4 | M20<br>3/4 | UKX17D1;H2317X<br>UKX17D1;HA2317X<br>UKX17D1;HE2317X |
| 80<br>3 3/16 | UKFX18D1;H2318X<br>UKFX18D1;HA2318X | 214<br>8 7/16 | 171<br>6 47/64 | 45<br>1 49/64 | 24<br>15/16 | 76<br>3 | 23<br>29/32 | 87.5<br>3 7/16 | 86<br>3.386 | 102<br>4 1/32 | M20<br>3/4 | UKX18D1;H2318X<br>UKX18D1;HA2318X |
| 90 | UKFX20D1;H2320X | 268 | 211 | 59 | 31 | 97 | 31 | 107.5 | 97 | 112 | M27 | UKX20D1;H2320X |

Remarks: 1) These numbers indicate relubricatable type. If maintenance free type is needed, please order without suffix "D1".
2) Adapter number with suffix "X" means a narrow slot type adapter sleeve.
In this case the lock washer with the straight inner prong should be used.
3) For HE2311XY, screw thread pitch different from the standard is applied, because of the thin thread section of sleeve.
To distinguish it, a suffix "Y" is added.
4) If the inch series housing units with dust cover are ordered with a closed end, the suffixes E, S or A are not included.
Example: CM-UKFX05D1; HE2305

Note: Please refer to page 36 for size of grease fitting.

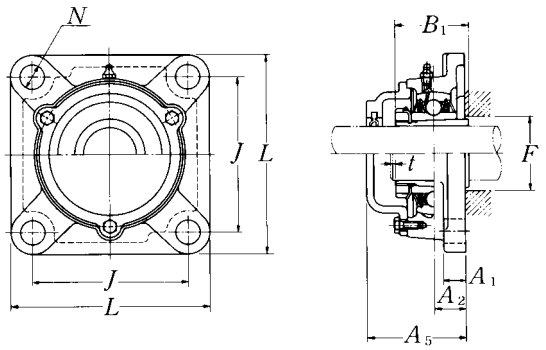


**Cast dust cover type**
Open end: **C-UKFX···D1**
Closed end: **CM-UKFX···D1**

| Housing number 1) | Unit number 1) 2) 3) 4) cast dust cover type | Nominal dimensions mm $t$ | Nominal dimensions inch $A_5$ | Mass of unit kg UKFX | Mass of unit lb C(CM) |
|---|---|---|---|---|---|
| FX15D1 | C(CM)-UKFX15D1;H2315X | 4 | 112 | 8.7 | 10 |
| FX15D1 | C(CM)-UKFX15AD1;HA2315 | 5/32 | 4 13/32 | 19 | 22 |
| FX15D1 | C(CM)-UKFX15ED1;HE2315X | | | | |
| FX16D1 | C(CM)-UKFX16D1;H2316X | 4 | 118 | 11 | 12 |
| FX16D1 | C(CM)-UKFX16AD1;HA2316 | 5/32 | 4 21/32 | 24 | 26 |
| FX16D1 | C(CM)-UKFX16ED1;HE2316X | | | | |
| FX17D1 | C(CM)-UKFX17D1;H2317X | 5 | 122 | 12 | 14 |
| FX17D1 | C(CM)-UKFX17AD1;HA2317X | 13/64 | 4 13/16 | 26 | 31 |
| FX17D1 | C(CM)-UKFX17ED1;HE2317X | | | | |
| FX18D1 | C(CM)-UKFX18D1;H2318X | 5 | 135 | 12 | 14 |
| FX18D1 | C(CM)-UKFX18AD1;HA2318X | 13/64 | 5 5/16 | 26 | 31 |
| FX20D1 | C(CM)-UKFX20D1;H2320X | 5 | 146.5 | 20 | 22 |

## Square flanged units cast housing w/spigot joint
## Adapter type

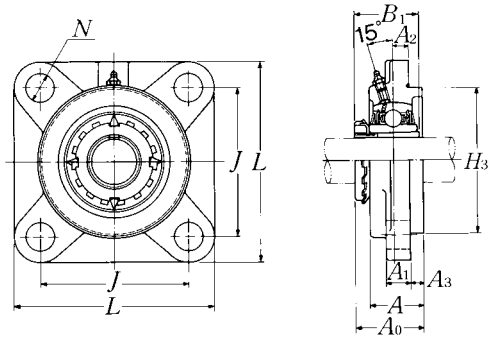


| Shaft dia. mm / inch | Unit number 1) 2) 3) | Nominal dimensions mm / inch L | J | A2 | N | A3 | A1 | A | H3 | A0 | B1 | Bolt size mm / inch | Bearing number 2) 3) |
|---|---|---|---|---|---|---|---|---|---|---|---|---|---|
| 20 | UKFS305D1;H2305X | 110 | 80 | 9 | 16 | 7 | 13 | 29 | 80 | 37 | 35 | M14 | UK305D1;H2305X |
| 3/4 | UKFS305D1;HE2305 | 4 11/32 | 3 5/32 | 23/64 | 5/8 | 9/32 | 1/2 | 1 9/64 | 3.1496 | 1 29/64 | 1.378 | 1/2 | UK305D1;HE2305 |
| 25 | UKFS306D1;H2306X | 125 | 95 | 10 | 16 | 8 | 15 | 32 | 90 | 40.5 | 38 | M14 | UK306D1;H2306X |
| 7/8 | UKFS306D1;HS2306 | 4 29/32 | 3 47/64 | 25/64 | 5/8 | 5/16 | 19/32 | 1 17/64 | 3.5433 | 1 19/32 | 1.496 | 1/2 | UK306D1;HS2306 |
| 1 | UKFS306D1;HE2306X | | | | | | | | | | | | UK306D1;HE2306X |
| 30 | UKFS307D1;H2307X | 135 | 100 | 11 | 19 | 9 | 16 | 36 | 100 | 45.5 | 43 | M16 | UK307D1;H2307X |
| 1 1/8 | UKFS307D1;HS2307 | 5 5/16 | 3 15/16 | 7/16 | 3/4 | 23/64 | 5/8 | 1 13/32 | 3.9370 | 1 51/64 | 1.693 | 5/8 | UK307D1;HS2307 |
| 35 | UKFS308D1;H2308X | 150 | 112 | 13 | 19 | 10 | 17 | 40 | 115 | 50 | 46 | M16 | UK308D1;H2308X |
| 1 1/4 | UKFS308D1;HE2308X | 5 29/32 | 4 13/32 | 33/64 | 3/4 | 25/64 | 21/32 | 1 9/16 | 4.5276 | 1 31/32 | 1.811 | 5/8 | UK308D1;HE2308X |
| 1 3/8 | UKFS308D1;HS2308X | | | | | | | | | | | | UK308D1;HS2308X |
| 40 | UKFS309D1;H2309X | 160 | 125 | 14 | 19 | 11 | 18 | 44 | 125 | 54.5 | 50 | M16 | UK309D1;H2309X |
| 1 7/16 | UKFS309D1;HA2309 | | | | | | | | | | | | UK309D1;HA2309 |
| 1 1/2 | UKFS309D1;HE2309X | 6 5/16 | 4 59/64 | 35/64 | 3/4 | 7/16 | 23/32 | 1 47/64 | 4.9213 | 2 9/64 | 1.969 | 5/8 | UK309D1;HE2309X |
| 1 5/8 | UKFS309D1;HS2309X | | | | | | | | | | | | UK309D1;HS2309X |
| 45 | UKFS310D1;H2310X | 175 | 132 | 16 | 23 | 12 | 19 | 48 | 140 | 60.5 | 55 | M20 | UK310D1;H2310X |
| 1 5/8 | UKFS310D1;HS2310 | | | | | | | | | | | | UK310D1;HS2310 |
| 1 11/16 | UKFS310D1;HA2310 | 6 7/8 | 5 13/64 | 5/8 | 29/32 | 15/32 | 3/4 | 1 57/64 | 5.5118 | 2 3/8 | 2.165 | 3/4 | UK310D1;HA2310 |
| 1 3/4 | UKFS310D1;HE2310X | | | | | | | | | | | | UK310D1;HE2310X |
| 50 | UKFS311D1;H2311X | 185 | 140 | 17 | 23 | 13 | 20 | 52 | 150 | 64 | 59 | M20 | UK311D1;H2311X |
| 1 7/8 | UKFS311D1;HS2311 | | | | | | | | | | | | UK311D1;HS2311 |
| 1 15/16 | UKFS311D1;HA2311 | 7 9/32 | 5 33/64 | 43/64 | 29/32 | 33/64 | 25/32 | 2 3/64 | 5.9055 | 2 33/64 | 2.323 | 3/4 | UK311D1;HA2311 |
| 2 | UKFS311D1;HE2311XY | | | | | | | | | | | | UK311D1;HE2311XY |
| 55 | UKFS312D1;H2312X | 195 | 150 | 19 | 23 | 14 | 22 | 56 | 160 | 69.5 | 62 | M20 | UK312D1;H2312X |
| 2 1/8 | UKFS312D1;HS2312 | 7 11/16 | 5 29/32 | 3/4 | 29/32 | 35/64 | 7/8 | 2 13/64 | 6.2992 | 2 47/64 | 2.441 | 3/4 | UK312D1;HS2312 |
| 60 | UKFS313D1;H2313X | 208 | 166 | 15 | 23 | 18 | 22 | 58 | 175 | 71.5 | 65 | M20 | UK313D1;H2313X |
| 2 3/16 | UKFS313D1;HA2313 | | | | | | | | | | | | UK313D1;HA2313 |
| 2 1/4 | UKFS313D1;HE2313X | 8 3/16 | 6 17/32 | 19/32 | 29/32 | 45/64 | 7/8 | 2 9/32 | 6.8898 | 2 13/16 | 2.559 | 3/4 | UK313D1;HE2313X |
| 2 3/8 | UKFS313D1;HS2313X | | | | | | | | | | | | UK313D1;HS2313X |

Remarks: 1) These numbers indicate relubricatable type. If maintenance free type is needed, please order without suffix "D1".
2) Adapter number with suffix "X" means a narrow slot type adapter sleeve.
In this case the lock washer with the straight inner prong should be used.
3) For HE2311XY, screw thread pitch different from the standard is applied, because of the thin thread section of sleeve.
To distinguish it, a suffix "Y" is added.
4) If the inch series housing units with dust cover are ordered with a closed end, the suffixes E, S or A are not included.
Example: CM-UKFS305D1; HE2305

Note: Please refer to page 36 for size of grease fitting.

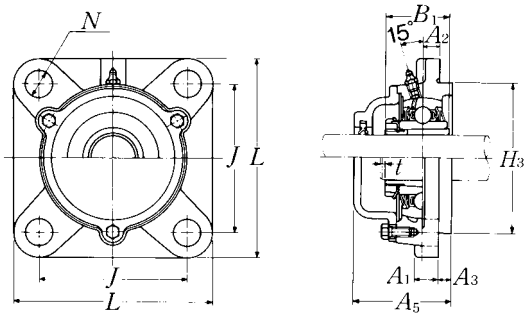


**Cast dust cover type**
Open end: **C-UKFS···D1**
Closed end: **CM-UKFS···D1**

| Housing number 1) | Unit number 1) 2) 3) 4) cast dust cover type | Nominal dimensions mm $t$ max. | Nominal dimensions inch $A_5$ | Mass of unit kg UKFS | Mass of unit lb C(CM) |
|---|---|---|---|---|---|
| FS305D1 | C(CM)-UKFS305D1;H2305X | 2 | 56 | 1.2 | 1.5 |
| FS305D1 | C(CM)-UKFS305ED1;HE2305 | 5/64 | 2 13/64 | 2.7 | 3.3 |
| FS306D1 | C(CM)-UKFS306D1;H2306X | 2 | 60 | 1.8 | 2.2 |
| FS306D1 | C(CM)-UKFS306SD1;HS2306 | 5/64 | 2 23/64 | 4.0 | 4.9 |
| FS306D1 | C(CM)-UKFS306ED1;HE2306X | | | | |
| FS307D1 | C(CM)-UKFS307D1;H2307X | 3 | 67 | 2.3 | 2.9 |
| FS307D1 | C(CM)-UKFS307SD1;HS2307 | 1/8 | 2 41/64 | 5.1 | 6.4 |
| FS308D1 | C(CM)-UKFS308D1;H2308X | 3 | 76 | 3.2 | 3.7 |
| FS308D1 | C(CM)-UKFS308ED1;HE2308X | 1/8 | 2 63/64 | 7.1 | 8.2 |
| FS308D1 | C(CM)-UKFS308SD1;HS2308X | | | | |
| FS309D1 | C(CM)-UKFS309D1;H2309X | 3 | 80 | 3.8 | 4.7 |
| FS309D1 | C(CM)-UKFS309AD1;HA2309 | | | | |
| FS309D1 | C(CM)-UKFS309ED1;HE2309X | 1/8 | 3 5/32 | 8.4 | 10 |
| FS309D1 | C(CM)-UKFS309SD1;HS2309X | | | | |
| FS310D1 | C(CM)-UKFS310D1;H2310X | 3 | 88 | 5.1 | 6.3 |
| FS310D1 | C(CM)-UKFS310SD1;HS2310 | | | | |
| FS310D1 | C(CM)-UKFS310AD1;HA2310 | 1/8 | 3 15/32 | 11 | 14 |
| FS310D1 | C(CM)-UKFS310ED1;HE2310X | | | | |
| FS311D1 | C(CM)-UKFS311D1;H2311X | 4 | 93 | 5.9 | 7.3 |
| FS311D1 | C(CM)-UKFS311SD1;HS2311 | | | | |
| FS311D1 | C(CM)-UKFS311AD1;HA2311 | 5/32 | 3 21/32 | 13 | 16 |
| FS311D1 | C(CM)-UKFS311ED1;HE2311XY | | | | |
| FS312D1 | C(CM)-UKFS312D1;H2312X | 4 | 100 | 7.0 | 8.4 |
| FS312D1 | C(CM)-UKFS312SD1;HS2312 | 5/32 | 3 15/16 | 15 | 19 |
| FS313D1 | C(CM)-UKFS313D1;H2313X | 4 | 103 | 8.4 | 10 |
| FS313D1 | C(CM)-UKFS313AD1;HA2313 | | | | |
| FS313D1 | C(CM)-UKFS313ED1;HE2313X | 5/32 | 4 1/16 | 19 | 22 |
| FS313D1 | C(CM)-UKFS313SD1;HS2313X | | | | |

## Square flanged units cast housing w/spigot joint
## Adapter type

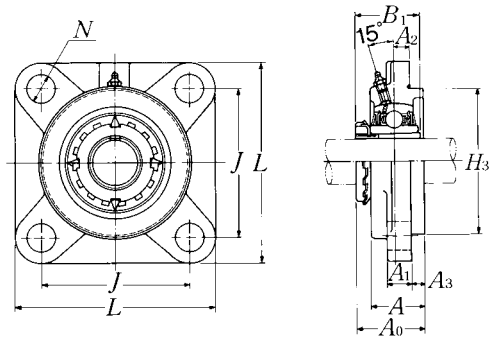


| Shaft dia. mm / inch | Unit number 1) 2) 3) | Nominal dimensions mm / inch L | J | A2 | N | A3 | A1 | A | H3 | A0 | B1 | Bolt size mm / inch | Bearing number 2) 3) |
|---|---|---|---|---|---|---|---|---|---|---|---|---|---|
| 65<br>2 7/16<br>2 1/2 | UKFS315D1;H2315X<br>UKFS315D1;HA2315<br>UKFS315D1;HE2315X | 236<br>9 9/32 | 184<br>7 1/4 | 21<br>53/64 | 25<br>63/64 | 18<br>45/64 | 25<br>31/32 | 66<br>2 19/32 | 200<br>7.8740 | 81.5<br>3 13/64 | 73<br>2.874 | M22<br>7/8 | UK315D1;H2315X<br>UK315D1;HA2315<br>UK315D1;HE2315X |
| 70<br>2 11/16<br>2 3/4 | UKFS316D1;H2316X<br>UKFS316D1;HA2316<br>UKFS316D1;HE2316X | 250<br>9 27/32 | 196<br>7 23/32 | 18<br>45/64 | 31<br>1 7/32 | 20<br>25/32 | 27<br>1 1/16 | 68<br>2 43/64 | 210<br>8.2677 | 84<br>3 5/16 | 78<br>3.071 | M27<br>1 | UK316D1;H2316X<br>UK316D1;HA2316<br>UK316D1;HE2316X |
| 75<br>2 15/16<br>3 | UKFS317D1;H2317X<br>UKFS317D1;HA2317X<br>UKFS317D1;HE2317X | 260<br>10 1/4 | 204<br>8 1/32 | 24<br>15/16 | 31<br>1 7/32 | 20<br>25/32 | 27<br>1 1/16 | 74<br>2 29/32 | 220<br>8.6614 | 92<br>3 5/8 | 82<br>3.228 | M27<br>1 | UK317D1;H2317X<br>UK317D1;HA2317X<br>UK317D1;HE2317X |
| 80<br>3 3/16 | UKFS318D1;H2318X<br>UKFS318D1;HA2318X | 280<br>11 1/32 | 216<br>8 1/2 | 24<br>15/16 | 35<br>1 3/8 | 20<br>25/32 | 30<br>1 3/16 | 76<br>2 63/64 | 240<br>9.4488 | 94<br>3 45/64 | 86<br>3.386 | M30<br>1 1/8 | UK318D1;H2318X<br>UK318D1;HA2318X |
| 85<br>3 1/4 | UKFS319D1;H2319X<br>UKFS319D1;HE2319X | 290<br>11 13/32 | 228<br>8 31/32 | 39<br>1 17/32 | 35<br>1 3/8 | 20<br>25/32 | 30<br>1 3/16 | 94<br>3 45/64 | 250<br>9.8425 | 111.5<br>4 25/64 | 90<br>3.543 | M30<br>1 1/8 | UK319D1;H2319X<br>UK319D1;HE2319X |
| 90<br>3 7/16<br>3 1/2 | UKFS320D1;H2320X<br>UKFS320D1;HA2320<br>UKFS320D1;HE2320X | 310<br>12 7/32 | 242<br>9 17/32 | 39<br>1 17/32 | 38<br>1 1/2 | 20<br>25/32 | 32<br>1 1/4 | 94<br>3 45/64 | 260<br>10.2362 | 115.5<br>4 35/64 | 97<br>3.819 | M33<br>1 1/4 | UK320D1;H2320X<br>UK320D1;HA2320<br>UK320D1;HE2320X |
| 100 | UKFS322D1;H2322X | 340 | 266 | 35 | 41 | 25 | 35 | 96 | 300 | 121 | 105 | M36 | UK322D1;H2322X |
| 110 | UKFS324D1;H2324X | 370 | 290 | 35 | 41 | 30 | 40 | 110 | 330 | 130 | 112 | M36 | UK324D1;H2324X |
| 115 | UKFS326D1;H2326 | 410 | 320 | 35 | 41 | 30 | 45 | 115 | 360 | 133 | 121 | M36 | UK326D1;H2326 |
| 125 | UKFS328D1;H2328 | 450 | 350 | 45 | 41 | 30 | 55 | 125 | 400 | 146.5 | 131 | M36 | UK328D1;H2328 |

Remarks: 1) These numbers indicate relubricatable type. If maintenance free type is needed, please order without suffix "D1".
2) Adapter number with suffix "X" means a narrow slot type adapter sleeve.
In this case the lock washer with the straight inner prong should be used.
3) For HE2311XY, screw thread pitch different from the standard is applied, because of the thin thread section of sleeve.
To distinguish it, a suffix "Y" is added.
4) If the inch series housing units with dust cover are ordered with a closed end, the suffixes E, S or A are not included.
Example: CM-UKFS305D1; HE2305

Note: Please refer to page 36 for size of grease fitting.

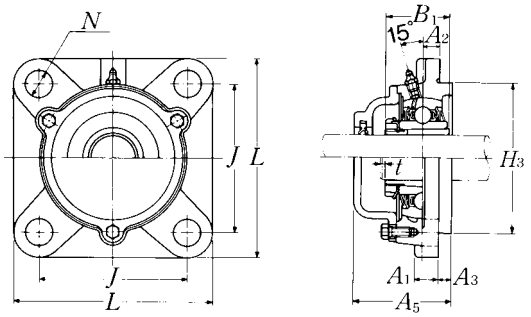


**Cast dust cover type**
Open end: **C-UKFS···D1**
Closed end: **CM-UKFS···D1**

| Housing number 1) | Unit number 1) 2) 3) 4) cast dust cover type | Nominal dimensions mm $t$ max. | Nominal dimensions inch $A_5$ | Mass of unit kg UKFS | Mass of unit lb C(CM) |
|---|---|---|---|---|---|
| FS315D1 | C(CM)-UKFS315D1;H2315X | 4 | 114 | 12 | 14 |
| FS315D1 | C(CM)-UKFS315AD1;HA2315 | 5/32 | 4 31/64 | 26 | 31 |
| FS315D1 | C(CM)-UKFS315ED1;HE2315X | | | | |
| FS316D1 | C(CM)-UKFS316D1;H2316X | 4 | 116 | 15 | 17 |
| FS316D1 | C(CM)-UKFS316AD1;HA2316 | 5/32 | 4 9/16 | 33 | 37 |
| FS316D1 | C(CM)-UKFS316ED1;HE2316X | | | | |
| FS317D1 | C(CM)-UKFS317D1;H2317X | 5 | 129 | 17 | 20 |
| FS317D1 | C(CM)-UKFS317AD1;HA2317X | 13/64 | 5 5/64 | 37 | 44 |
| FS317D1 | C(CM)-UKFS317ED1;HE2317X | | | | |
| FS318D1 | C(CM)-UKFS318D1;H2318X | 5 | 129 | 21 | 24 |
| FS318D1 | C(CM)-UKFS318AD1;HA2318X | 13/64 | 5 5/64 | 46 | 53 |
| FS319D1 | C(CM)-UKFS319D1;H2319X | 5 | 149 | 24 | 29 |
| FS319D1 | C(CM)-UKFS319ED1;HE2319X | 13/64 | 5 55/64 | 53 | 64 |
| FS320D1 | C(CM)-UKFS320D1;H2320X | 5 | 154 | 29 | 34 |
| FS320D1 | C(CM)-UKFS320AD1;HA2320 | 13/64 | 6 1/16 | 64 | 75 |
| FS320D1 | C(CM)-UKFS320ED1;HE2320X | | | | |
| FS322D1 | C(CM)-UKFS322D1;H2322X | 5 | 160 | 38 | 46 |
| FS324D1 | C(CM)-UKFS324D1;H2324X | 5 | 172 | 51 | 59 |
| FS326D1 | C(CM)-UKFS326D1;H2326 | 6 | 178 | 69 | 79 |
| FS328D1 | C(CM)-UKFS328D1;H2328 | 6 | 192 | 98 | 110 |

## Round flanged units cast housing w/spigot joint
## Adapter type

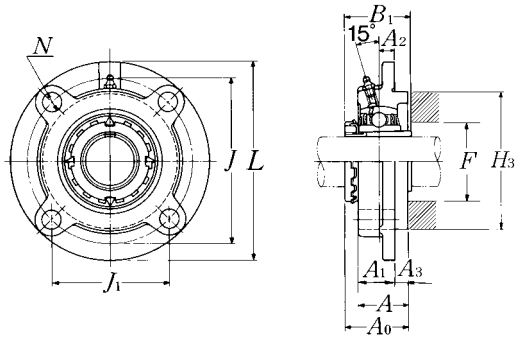


| Shaft dia. mm / inch | Unit number 1) 2) 3) | Nominal dimensions (mm / inch) L | J | (J1) | A2 | N | A3 | A1 | A1C | A | H3 | A0 | B1 | F min. | Bolt size mm / inch | Bearing 2) 3) number |
|---|---|---|---|---|---|---|---|---|---|---|---|---|---|---|---|---|
| 20 | UKFC205D1;H2305X | 115 | 90 | 63.6 | 10 | 12 | 6 | 21 | 22 | 27 | 70 | 35.5 | 35 | 30 | M10 | UK205D1;H2305X |
| 3/4 | UKFC205D1;HE2305 | 4 17/32 | 3 35/64 | 2 1/2 | 25/64 | 15/32 | 15/64 | 13/16 | 7/8 | 1 1/16 | 2.7559 | 1 25/64 | 1.378 | 1 3/16 | 3/8 | UK205D1;HE2305 |
| 25 | UKFC206D1;H2306X | 125 | 100 | 70.7 | 10 | 12 | 8 | 23 | 24.5 | 31 | 80 | 39 | 38 | 36 | M10 | UK206D1;H2306X |
| 7/8 | UKFC206D1;HS2306 | 4 29/32 | 3 15/16 | 2 25/32 | 25/64 | 15/32 | 5/16 | 29/32 | 31/32 | 1 7/32 | 3.1496 | 1 17/32 | 1.496 | 1 13/32 | 3/8 | UK206D1;HS2306 |
| 1 | UKFC206D1;HE2306X | | | | | | | | | | | | | | | UK206D1;HE2306X |
| 30 | UKFC207D1;H2307X | 135 | 110 | 77.8 | 11 | 14 | 8 | 26 | 26 | 34 | 90 | 42.5 | 43 | 40 | M12 | UK207D1;H2307X |
| 1 1/8 | UKFC207D1;HS2307 | 5 5/16 | 4 21/64 | 3 1/16 | 7/16 | 35/64 | 5/16 | 1 1/32 | 1 1/32 | 1 11/32 | 3.5433 | 1 43/64 | 1.693 | 1 9/16 | 7/16 | UK207D1;HS2307 |
| 35 | UKFC208D1;H2308X | 145 | 120 | 84.9 | 11 | 14 | 10 | 26 | 27.5 | 36 | 100 | 46.5 | 46 | 46 | M12 | UK208D1;H2308X |
| 1 1/4 | UKFC208D1;HE2308X | 5 23/32 | 4 23/32 | 3 11/32 | 7/16 | 35/64 | 25/64 | 1 1/32 | 1 5/64 | 1 27/64 | 3.9370 | 1 53/64 | 1.811 | 1 13/16 | 7/16 | UK208D1;HE2308X |
| 1 3/8 | UKFC208D1;HS2308X | | | | | | | | | | | | | | | UK208D1;HS2308X |
| 40 | UKFC209D1;H2309X | 160 | 132 | 93.3 | 10 | 16 | 12 | 26 | 28 | 38 | 105 | 48.5 | 50 | 52 | M14 | UK209D1;H2309X |
| 1 7/16 | UKFC209D1;HA2309 | | | | | | | | | | | | | | | UK209D1;HA2309 |
| 1 1/2 | UKFC209D1;HE2309X | 6 5/16 | 5 13/64 | 3 43/64 | 25/64 | 5/8 | 15/32 | 1 1/32 | 1 7/64 | 1 1/2 | 4.1339 | 1 29/32 | 1.969 | 2 1/16 | 1/2 | UK209D1;HE2309X |
| 1 5/8 | UKFC209D1;HS2309X | | | | | | | | | | | | | | | UK209D1;HS2309X |
| 45 | UKFC210D1;H2310X | 165 | 138 | 97.6 | 10 | 16 | 12 | 28 | 29 | 40 | 110 | 50 | 55 | 57 | M14 | UK210D1;H2310X |
| 1 5/8 | UKFC210D1;HS2310 | | | | | | | | | | | | | | | UK210D1;HS2310 |
| 1 11/16 | UKFC210D1;HA2310 | 6 1/2 | 5 7/16 | 3 27/32 | 25/64 | 5/8 | 15/32 | 1 3/32 | 1 5/32 | 1 37/64 | 4.3307 | 1 31/32 | 2.165 | 2 1/4 | 1/2 | UK210D1;HA2310 |
| 1 3/4 | UKFC210D1;HE2310X | | | | | | | | | | | | | | | UK210D1;HE2310X |
| 50 | UKFC211D1;H2311X | 185 | 150 | 106.1 | 13 | 19 | 12 | 31 | 32.5 | 43 | 125 | 54.5 | 59 | 64 | M16 | UK211D1;H2311X |
| 1 7/8 | UKFC211D1;HS2311 | | | | | | | | | | | | | | | UK211D1;HS2311 |
| 1 15/16 | UKFC211D1;HA2311 | 7 9/32 | 5 29/32 | 4 11/64 | 33/64 | 3/4 | 15/32 | 1 7/32 | 1 9/32 | 1 11/16 | 4.9213 | 2 9/64 | 2.323 | 2 17/32 | 5/8 | UK211D1;HA2311 |
| 2 | UKFC211D1;HE2311XY | | | | | | | | | | | | | | | UK211D1;HE2311XY |
| 55 | UKFC212D1;H2312X | 195 | 160 | 113.1 | 17 | 19 | 12 | 36 | 38 | 48 | 135 | 61 | 62 | 69 | M16 | UK212D1;H2312X |
| 2 1/8 | UKFC212D1;HS2312 | 7 11/16 | 6 19/64 | 4 29/64 | 43/64 | 3/4 | 15/32 | 1 13/32 | 1 1/2 | 1 57/64 | 5.3150 | 2 13/32 | 2.441 | 2 23/32 | 5/8 | UK212D1;HS2312 |
| 60 | UKFC213D1;H2313X | 205 | 170 | 120.2 | 16 | 19 | 14 | 36 | 38 | 50 | 145 | 64 | 65 | 74 | M16 | UK213D1;H2313X |
| 2 3/16 | UKFC213D1;HA2313 | | | | | | | | | | | | | | | UK213D1;HA2313 |
| 2 1/4 | UKFC213D1;HE2313X | 8 1/16 | 6 11/16 | 4 47/64 | 5/8 | 3/4 | 35/64 | 1 13/32 | 1 1/2 | 1 31/32 | 5.7087 | 2 33/64 | 2.559 | 2 29/32 | 5/8 | UK213D1;HE2313X |
| 2 3/8 | UKFC213D1;HS2313X | | | | | | | | | | | | | | | UK213D1;HS2313X |

Remarks: 1) These numbers indicate relubricatable type. If maintenance free type is needed, please order without suffix "D1".
2) Adapter number with suffix "X" means a narrow slot type adapter sleeve.
In this case the lock washer with the straight inner prong should be used.
3) For HE2311XY, screw thread pitch different from the standard is applied, because of the thin thread section of sleeve.
To distinguish it, a suffix "Y" is added.
4) If the inch series housing units with dust cover are ordered with a closed end, the suffixes E, S or A are not included.
Example: SM-UKFC205D1; HE2305

Note: Please refer to page 36 for size of grease fitting.

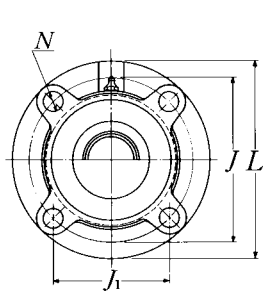


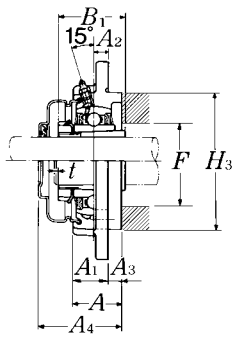


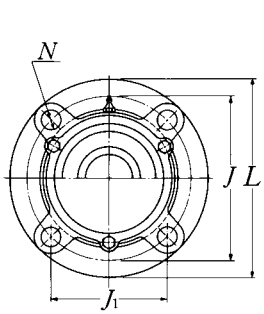


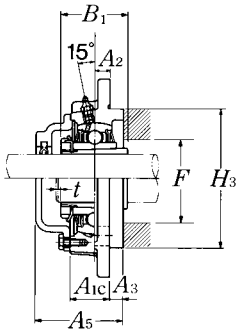


**Pressed steel dust cover type**
Open end: **S-UKFC···D1**
Closed end: **SM-UKFC···D1**

**Cast dust cover type**
Open end: **C-UKFC···D1**
Closed end: **CM-UKFC···D1**

| Housing number 1) | Unit number 1) 2) 3) 4) pressed steel dust cover type | Unit number 1) 2) 3) 4) cast dust cover type | Nominal dimensions mm $t$ max. | $A_4$ | inch $A_5$ | Mass of unit kg UKFC | S(SM) | lb C(CM) |
|---|---|---|---|---|---|---|---|---|
| FC205D1 | S(SM)-UKFC205D1;H2305X | C(CM)-UKFC205D1;H2305X | 2 | 44.5 | 51 | 1.0 | 1.1 | 1.2 |
| FC205D1 | S(SM)-UKFC205ED1;HE2305 | C(CM)-UKFC205ED1;HE2305 | 5/64 | 1 3/4 | 2 | 2.2 | 2.4 | 2.7 |
| FC206D1 | S(SM)-UKFC206D1;H2306X | C(CM)-UKFC206D1;H2306X | 2 | 49 | 56 | 1.3 | 1.4 | 1.7 |
| FC206D1 | S(SM)-UKFC206SD1;HS2306 | C(CM)-UKFC206SD1;HS2306 | 5/64 | 1 59/64 | 2 13/16 | 2.9 | 3.1 | 3.8 |
| FC206D1 | S(SM)-UKFC206ED1;HE2306X | C(CM)-UKFC206ED1;HE2306X | | | | | | |
| FC207D1 | S(SM)-UKFC207D1;H2307X | C(CM)-UKFC207D1;H2307X | 3 | 55 | 59 | 1.7 | 1.8 | 2.0 |
| FC207D1 | S(SM)-UKFC207SD1;HS2307 | C(CM)-UKFC207SD1;HS2307 | 1/8 | 2 11/64 | 2 21/64 | 3.7 | 4.0 | 4.4 |
| FC208D1 | S(SM)-UKFC208D1;H2308X | C(CM)-UKFC208D1;H2308X | 3 | 62 | 66 | 2.1 | 2.2 | 2.6 |
| FC208D1 | S(SM)-UKFC208ED1;HE2308X | C(CM)-UKFC208ED1;HE2308X | 1/8 | 2 7/16 | 2 19/32 | 4.6 | 4.9 | 5.7 |
| FC208D1 | S(SM)-UKFC208SD1;HS2308X | C(CM)-UKFC208SD1;HS2308X | | | | | | |
| FC209D1 | S(SM)-UKFC209D1;H2309X | C(CM)-UKFC209D1;H2309X | 3 | 63 | 70 | 2.8 | 2.9 | 3.4 |
| FC209D1 | S(SM)-UKFC209AD1;HA2309 | C(CM)-UKFC209AD1;HA2309 | | | | | | |
| FC209D1 | S(SM)-UKFC209ED1;HE2309X | C(CM)-UKFC209ED1;HE2309X | 1/8 | 2 31/64 | 2 3/4 | 6.2 | 6.4 | 7.5 |
| FC209D1 | S(SM)-UKFC209SD1;HS2309X | C(CM)-UKFC209SD1;HS2309X | | | | | | |
| FC210D1 | S(SM)-UKFC210D1;H2310X | C(CM)-UKFC210D1;H2310X | 3 | 65.5 | 72 | 3.1 | 3.3 | 4.8 |
| FC210D1 | S(SM)-UKFC210SD1;HS2310 | C(CM)-UKFC210SD1;HS2310 | | | | | | |
| FC210D1 | S(SM)-UKFC210AD1;HA2310 | C(CM)-UKFC210AD1;HA2310 | 1/8 | 2 37/64 | 2 53/64 | 6.8 | 7.3 | 11 |
| FC210D1 | S(SM)-UKFC210ED1;HE2310X | C(CM)-UKFC210ED1;HE2310X | | | | | | |
| FC211D1 | S(SM)-UKFC211D1;H2311X | C(CM)-UKFC211D1;H2311X | 4 | 71 | 75 | 4.2 | 4.4 | 5.1 |
| FC211D1 | S(SM)-UKFC211SD1;HS2311 | C(CM)-UKFC211SD1;HS2311 | | | | | | |
| FC211D1 | S(SM)-UKFC211AD1;HA2311 | C(CM)-UKFC211AD1;HA2311 | 5/32 | 2 51/64 | 2 61/64 | 9.3 | 9.7 | 11 |
| FC211D1 | S(SM)-UKFC211ED1;HE2311XY | C(CM)-UKFC211ED1;HE2311XY | | | | | | |
| FC212D1 | S(SM)-UKFC212D1;H2312X | C(CM)-UKFC212D1;H2312X | 4 | 80 | 86 | 5.0 | 5.2 | 6.1 |
| FC212D1 | S(SM)-UKFC212SD1;HS2312 | C(CM)-UKFC212SD1;HS2312 | 5/32 | 3 5/32 | 3 25/64 | 11 | 11 | 13 |
| FC213D1 | S(SM)-UKFC213D1;H2313X | C(CM)-UKFC213D1;H2313X | 4 | 83.5 | 90 | 6.0 | 6.1 | 7.1 |
| FC213D1 | S(SM)-UKFC213AD1;HA2313 | C(CM)-UKFC213AD1;HA2313 | | | | | | |
| FC213D1 | S(SM)-UKFC213ED1;HE2313X | C(CM)-UKFC213ED1;HE2313X | 5/32 | 3 9/32 | 3 35/64 | 13 | 13 | 16 |
| FC213D1 | S(SM)-UKFC213SD1;HS2313X | C(CM)-UKFC213SD1;HS2313X | | | | | | |

## Round flanged units cast housing w/spigot joint
## Adapter type

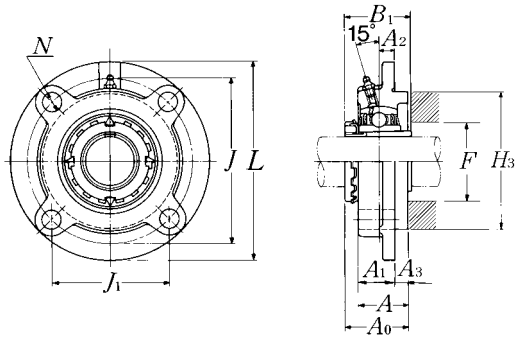


| Shaft dia. mm / inch | Unit number 1) 2) 3) | Nominal dimensions mm / inch: L | J | (J1) | A2 | N | A3 | A1 | A1C | A | H3 | A0 | B1 | F min. | Bolt size mm / inch | Bearing 2) 3) number |
|---|---|---|---|---|---|---|---|---|---|---|---|---|---|---|---|---|
| 65 | UKFC215D1;H2315X | 220 | 184 | 130.1 | 18 | 19 | 16 | 40 | 43 | 56 | 160 | 71 | 73 | 84 | M16 | UK215D1;H2315X |
| 2 7/16 | UKFC215D1;HA2315 | 8 21/32 | 7 1/4 | 5 1/8 | 45/64 | 3/4 | 5/8 | 1 9/16 | 1 11/16 | 2 13/64 | 6.2992 | 2 51/64 | 2.874 | 3 5/16 | 5/8 | UK215D1;HA2315 |
| 2 1/2 | UKFC215D1;HE2315X | | | | | | | | | | | | | | | UK215D1;HE2315X |
| 70 | UKFC216D1;H2316X | 240 | 200 | 141.4 | 18 | 23 | 16 | 42 | 43 | 58 | 170 | 73.5 | 78 | 90 | M20 | UK216D1;H2316X |
| 2 11/16 | UKFC216D1;HA2316 | 9 7/16 | 7 7/8 | 5 9/16 | 45/64 | 29/32 | 5/8 | 1 21/32 | 1 11/16 | 2 9/32 | 6.6929 | 2 57/64 | 3.071 | 3 17/32 | 3/4 | UK216D1;HA2316 |
| 2 3/4 | UKFC216D1;HE2316X | | | | | | | | | | | | | | | UK216D1;HE2316X |
| 75 | UKFC217D1;H2317X | 250 | 208 | 147.1 | 18 | 23 | 18 | 45 | 45.5 | 63 | 180 | 77 | 82 | 95 | M20 | UK217D1;H2317X |
| 2 15/16 | UKFC217D1;HA2317X | 9 27/32 | 8 3/16 | 5 51/64 | 45/64 | 29/32 | 45/64 | 1 25/32 | 1 51/64 | 2 31/64 | 7.0866 | 3 1/32 | 3.228 | 3 3/4 | 3/4 | UK217D1;HA2317X |
| 3 | UKFC217D1;HE2317X | | | | | | | | | | | | | | | UK217D1;HE2317X |
| 80 | UKFC218D1;H2318X | 265 | 220 | 155.6 | 22 | 23 | 18 | 50 | 50 | 68 | 190 | 81.5 | 86 | 102 | M20 | UK218D1;H2318X |
| 3 3/16 | UKFC218D1;HA2318X | 10 7/16 | 8 21/32 | 6 1/8 | 55/64 | 29/32 | 45/64 | 1 31/32 | 1 31/32 | 2 43/64 | 7.4803 | 3 13/64 | 3.386 | 4 1/32 | 3/4 | UK218D1;HA2318X |

Remarks: 1) These numbers indicate relubricatable type. If maintenance free type is needed, please order without suffix "D1".
2) Adapter number with suffix "X" means a narrow slot type adapter sleeve.
In this case the lock washer with the straight inner prong should be used.
3) For HE2311XY, screw thread pitch different from the standard is applied, because of the thin thread section of sleeve.
To distinguish it, a suffix "Y" is added.
4) If the inch series housing units with dust cover are ordered with a closed end, the suffixes E, S or A are not included.
Example: SM-UKFC205D1; HE2305

Note: Please refer to page 36 for size of grease fitting.

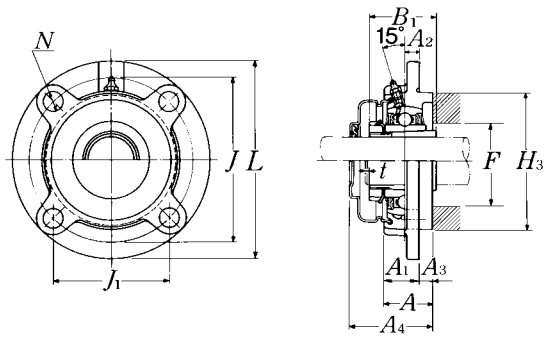


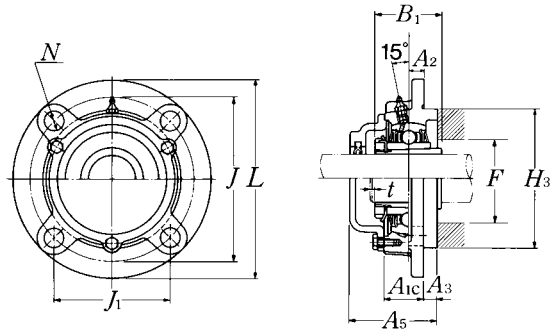


**Pressed steel dust cover type**
Open end: **S-UKFC···D1**
Closed end: **SM-UKFC···D1**

**Cast dust cover type**
Open end: **C-UKFC···D1**
Closed end: **CM-UKFC···D1**

| Housing number [1] | Unit number [1) 2) 3) 4)] pressed steel dust cover type | Unit number [1) 2) 3) 4)] cast dust cover type | Nominal dimensions mm $t$ max. | $A_4$ | inch $A_5$ | Mass of unit kg UKFC | S(SM) | lb C(CM) |
|---|---|---|---|---|---|---|---|---|
| FC215D1 | — | C(CM)-UKFC215D1;H2315X | 4 | — | 102 | 7.7 | — | 9.3 |
| FC215D1 | — | C(CM)-UKFC215AD1;HA2315 | 5/32 | — | 4 1/64 | 17 | — | 21 |
| FC215D1 | | C(CM)-UKFC215ED1;HE2315X | | | | | | |
| FC216D1 | — | C(CM)-UKFC216D1;H2316X | 4 | — | 106 | 9.5 | — | 11 |
| FC216D1 | — | C(CM)-UKFC216AD1;HA2316 | 5/32 | — | 4 11/64 | 21 | — | 24 |
| FC216D1 | | C(CM)-UKFC216D1;HE2316X | | | | | | |
| FC217D1 | — | C(CM)-UKFC217D1;H2317X | 5 | — | 114 | 11 | — | 13 |
| FC217D1 | — | C(CM)-UKFC217AD1;HA2317X | 13/64 | — | 4 31/64 | 24 | — | 29 |
| FC217D1 | | C(CM)-UKFC217ED1;HE2317X | | | | | | |
| FC218D1 | — | C(CM)-UKFC218D1;H2318X | 5 | — | 122 | 13 | — | 15 |
| FC218D1 | — | C(CM)-UKFC218AD1;HA2318X | 13/64 | — | 4 51/64 | 29 | — | 33 |

## Round flanged units cast housing w/spigot joint
## Adapter type

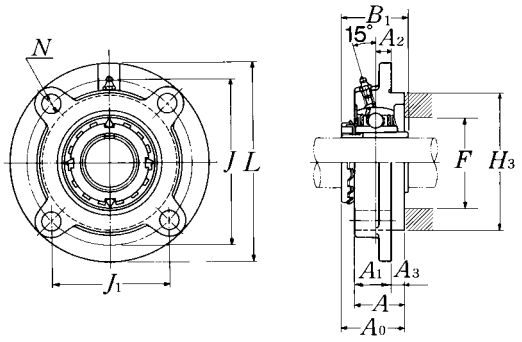


| Shaft dia. mm / inch | Unit number 1) 2) 3) | Nominal dimensions (mm / inch) L | J | (J1) | A2 | N | A3 | A1 | A | H3 | A0 | B1 | F min. | Bolt size mm / inch |
|---|---|---|---|---|---|---|---|---|---|---|---|---|---|---|
| 20 | UKFCX05D1;H2305X | 111 | 92.1 | 65.1 | 10 | 9.5 | 6 | 24 | 30 | 76 | 37 | 35 | 30 | M8 |
| 3/4 | UKFCX05D1;HE2305 | 4 3/8 | 3 5/8 | 2 9/16 | 25/64 | 3/8 | 1/4 | 15/16 | 1 3/16 | 2.9921 | 1 29/64 | 1.378 | 1 3/16 | 5/16 |
| 25 | UKFCX06D1;H2306X | 127 | 105 | 74.2 | 8 | 12 | 9.5 | 22.5 | 32 | 85 | 40 | 38 | 36 | M10 |
| 7/8 | UKFCX06D1;HS2306 | 5 | 4 9/64 | 2 59/64 | 5/16 | 15/32 | 3/8 | 7/8 | 1 17/64 | 3.3465 | 1 37/64 | 1.496 | 1 13/32 | 3/8 |
| 1 | UKFCX06D1;HE2306X | | | | | | | | | | | | | |
| 30 | UKFCX07D1;H2307X | 133 | 111 | 78.5 | 9 | 12 | 11 | 26 | 37 | 92 | 44.5 | 43 | 40 | M10 |
| 1 1/8 | UKFCX07D1;HS2307 | 5 1/4 | 4 3/8 | 3 3/32 | 23/64 | 15/32 | 7/16 | 1 1/32 | 1 29/64 | 3.6220 | 1 3/4 | 1.693 | 1 9/16 | 3/8 |
| 35 | UKFCX08D1;H2308X | 133 | 111 | 78.5 | 9 | 12 | 11 | 26 | 37 | 92 | 45.5 | 46 | 46 | M10 |
| 1 1/4 | UKFCX08D1;HE2308X | 5 1/4 | 4 3/8 | 3 3/32 | 23/64 | 15/32 | 7/16 | 1 1/32 | 1 29/64 | 3.6220 | 1 51/64 | 1.811 | 1 13/16 | 3/8 |
| 1 3/8 | UKFCX08D1;HS2308X | | | | | | | | | | | | | |
| 40 | UKFCX09D1;H2309X | 155 | 130 | 91.9 | 8 | 14 | 12 | 25 | 37 | 108 | 47 | 50 | 52 | M12 |
| 1 7/16 | UKFCX09D1;HA2309 | | | | | | | | | | | | | |
| 1 1/2 | UKFCX09D1;HE2309X | 6 3/32 | 5 1/8 | 3 5/8 | 5/16 | 35/64 | 15/32 | 31/32 | 1 29/64 | 4.2520 | 1 27/32 | 1.969 | 2 1/16 | 7/16 |
| 1 5/8 | UKFCX09D1;HS2309X | | | | | | | | | | | | | |
| 45 | UKFCX10D1;H2310X | 162 | 136 | 96.2 | 7 | 14 | 16 | 25 | 41 | 118 | 52.5 | 55 | 57 | M12 |
| 1 5/8 | UKFCX10D1;HS2310 | | | | | | | | | | | | | |
| 1 11/16 | UKFCX10D1;HA2310 | 6 3/8 | 5 23/64 | 3 25/32 | 9/32 | 35/64 | 5/8 | 31/32 | 1 39/64 | 4.6457 | 2 1/16 | 2.165 | 2 1/4 | 7/16 |
| 1 3/4 | UKFCX10D1;HE2310X | | | | | | | | | | | | | |
| 50 | UKFCX11D1;H2311X | 180 | 152 | 107.5 | 4 | 16 | 22 | 26 | 48 | 127 | 57 | 59 | 64 | M14 |
| 1 7/8 | UKFCX11D1;HS2311 | | | | | | | | | | | | | |
| 1 15/16 | UKFCX11D1;HA2311 | 7 3/32 | 5 63/64 | 4 15/64 | 5/32 | 5/8 | 55/64 | 1 1/32 | 1 57/64 | 5.0000 | 2 1/4 | 2.323 | 2 17/32 | 1/2 |
| 2 | UKFCX11D1;HE2311XY | | | | | | | | | | | | | |
| 55 | UKFCX12D1;H2312X | 194 | 165 | 116.7 | 11 | 16 | 20 | 33 | 53 | 140 | 64 | 62 | 69 | M14 |
| 2 1/8 | UKFCX12D1;HS2312 | 7 5/8 | 6 1/2 | 4 19/32 | 7/16 | 5/8 | 25/32 | 1 5/16 | 2 5/64 | 5.5118 | 2 33/64 | 2.441 | 2 23/32 | 1/2 |
| 60 | UKFCX13D1;H2313X | 194 | 165 | 116.7 | 11 | 16 | 20 | 33 | 53 | 140 | 66 | 65 | 74 | M14 |
| 2 3/16 | UKFCX13D1;HA2313 | | | | | | | | | | | | | |
| 2 1/4 | UKFCX13D1;HE2313X | 7 5/8 | 6 1/2 | 4 19/32 | 7/16 | 5/8 | 25/32 | 1 5/16 | 2 5/64 | 5.5118 | 2 19/32 | 2.559 | 2 29/32 | 1/2 |
| 2 3/8 | UKFCX13D1;HS2313X | | | | | | | | | | | | | |

Remarks: 1) These numbers indicate relubricatable type. If maintenance free type is needed, please order without suffix "D1".
2) Adapter number with suffix "X" means a narrow slot type adapter sleeve.
In this case the lock washer with the straight inner prong should be used.
3) For HE2311XY, screw thread pitch different from the standard is applied, because of the thin thread section of sleeve.
To distinguish it, a suffix "Y" is added.

Note: Please refer to page 36 for size of grease fitting.

| Bearing number [2) 3)] | Housing [1)] number | Mass of unit kg | lb |
|---|---|---|---|
| UKX05D1;H2305X | FCX05D1 | 1.2 | |
| UKX05D1;HE2305 | FCX05D1 | 2.7 | |
| UKX06D1;H2306X | FCX06D1 | 1.5 | |
| UKX06D1;HS2306 | FCX06D1 | 3.3 | |
| UKX06D1;HE2306X | FCX06D1 | | |
| UKX07D1;H2307X | FCX07D1 | 1.9 | |
| UKX07D1;HS2307 | FCX07D1 | 4.2 | |
| UKX08D1;H2308X | FCX08D1 | 2.2 | |
| UKX08D1;HE2308X | FCX08D1 | 4.9 | |
| UKX08D1;HS2308X | FCX08D1 | | |
| UKX09D1;H2309X | FCX09D1 | 2.7 | |
| UKX09D1;HA2309 | FCX09D1 | | |
| UKX09D1;HE2309X | FCX09D1 | 6.0 | |
| UKX09D1;HS2309X | FCX09D1 | | |
| UKX10D1;H2310X | FCX10D1 | 3.1 | |
| UKX10D1;HS2310 | FCX10D1 | | |
| UKX10D1;HA2310 | FCX10D1 | 6.8 | |
| UKX10D1;HE2310X | FCX10D1 | | |
| UKX11D1;H2311X | FCX11D1 | 4.2 | |
| UKX11D1;HS2311 | FCX11D1 | | |
| UKX11D1;HA2311 | FCX11D1 | 9.3 | |
| UKX11D1;HE2311XY | FCX11D1 | | |
| UKX12D1;H2312X | FCX12D1 | 5.5 | |
| UKX12D1;HS2312 | FCX12D1 | 12 | |
| UKX13D1;H2313X | FCX13D1 | 5.4 | |
| UKX13D1;HA2313 | FCX13D1 | | |
| UKX13D1;HE2313X | FCX13D1 | 12 | |
| UKX15D1;HS2313X | FCX13D1 | | |

## Round flanged units cast housing w/spigot joint
## Adapter type

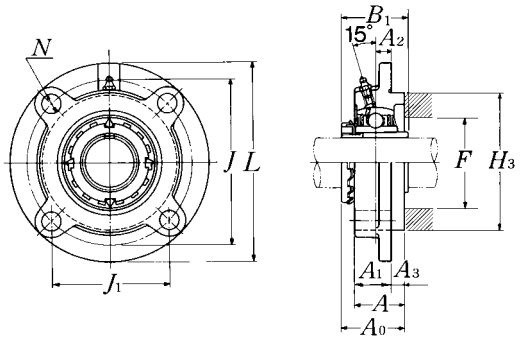


| Shaft dia. mm / inch | Unit number 1) 2) 3) | Nominal dimensions mm / inch | | | | | | | | | | | | Bolt size mm / inch |
|---|---|---|---|---|---|---|---|---|---|---|---|---|---|---|
| | | $L$ | $J$ | ($J_1$) | $A_2$ | $N$ | $A_3$ | $A_1$ | $A$ | $H_3$ | $A_0$ | $B_1$ | $F$ min. | |
| 65 | UKFCX15D1;H2315X | 222 | 190 | 134.4 | 12 | 19 | 22 | 35 | 57 | 164 | 71.5 | 73 | 84 | M16 |
| 2 7/16 | UKFCX15D1;HA2315 | 8 3/4 | 7 31/64 | 5 9/32 | 15/32 | 3/4 | 55/64 | 1 3/8 | 2 1/4 | 6.4567 | 2 13/16 | 2.874 | 3 5/16 | 5/8 |
| 2 1/2 | UKFCX15D1;HE2315X | | | | | | | | | | | | | |
| 70 | UKFCX16D1;H2316X | 260 | 219 | 154.9 | 10 | 23 | 25 | 36 | 61 | 186 | 75 | 78 | 90 | M20 |
| 2 11/16 | UKFCX16D1;HA2316 | 10 1/4 | 8 5/8 | 6 3/32 | 25/64 | 29/32 | 63/64 | 1 13/32 | 2 13/32 | 7.3228 | 2 61/64 | 3.071 | 3 17/32 | 3/4 |
| 2 3/4 | UKFCX16D1;HE2316X | | | | | | | | | | | | | |
| 75 | UKFCX17D1;H2317X | 260 | 219 | 154.9 | 10 | 23 | 25 | 36 | 61 | 186 | 76.5 | 82 | 95 | M20 |
| 2 15/16 | UKFCX17D1;HA2317X | 10 1/4 | 8 5/8 | 6 3/32 | 25/64 | 29/32 | 63/64 | 1 13/32 | 2 13/32 | 7.3228 | 3 1/64 | 3.228 | 3 3/4 | 3/4 |
| 3 | UKFCX17D1;HE2317X | | | | | | | | | | | | | |
| 80 | UKFCX18D1;H2318X | 260 | 219 | 154.9 | 12 | 23 | 28 | 43 | 71 | 186 | 82.5 | 86 | 102 | M20 |
| 3 3/16 | UKFCX18D1;HA2318X | 10 1/4 | 8 5/8 | 6 3/32 | 15/32 | 29/32 | 1 7/64 | 1 11/16 | 2 51/64 | 7.3228 | 3 1/4 | 3.386 | 4 1/32 | 3/4 |
| 90 | UKFCX20D1;H2320X | 276 | 238 | 168.3 | 22 | 23 | 28 | 66 | 94 | 206 | 99 | 97 | 112 | M20 |

Remarks: 1) These numbers indicate relubricatable type. If maintenance free type is needed, please order without suffix "D1".
2) Adapter number with suffix "X" means a narrow slot type adapter sleeve.
In this case the lock washer with the straight inner prong should be used.
3) For HE2311XY, screw thread pitch different from the standard is applied, because of the thin thread section of sleeve.
To distinguish it, a suffix "Y" is added.

Note: Please refer to page 36 for size of grease fitting.

| Bearing number [2) 3)] | Housing number [1)] | Mass of unit kg | lb |
|---|---|---|---|
| UKX15D1;H2315X | FCX15D1 | 8.2 | |
| UKX15D1;HA2315 | FCX15D1 | 18 | |
| UKX15D1;HE2315X | FCX15D1 | | |
| UKX16D1;H2316X | FCX16D1 | 12 | |
| UKX16D1;HA2316 | FCX16D1 | 26 | |
| UKX16D1;HE2316X | FCX16D1 | | |
| UKX17D1;H2317X | FCX17D1 | 12 | |
| UKX17D1;HA2317X | FCX17D1 | 26 | |
| UKX17D1;HE2317X | FCX17D1 | | |
| UKX18D1;H2318X | FCX18D1 | 12 | |
| UKX18D1;HA2318X | FCX18D1 | 26 | |
| UKFX20D1;H2320X | FCX20D1 | 18 | |

## Rhombus flanged units cast housing
## Adapter type

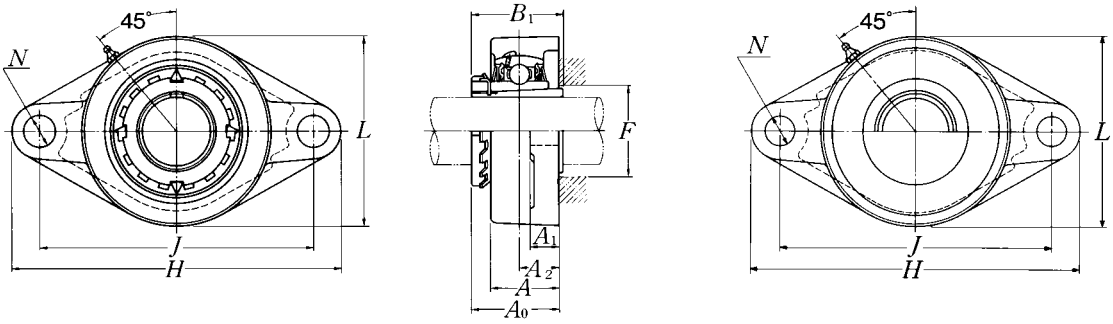


**Pressed steel dust cover type**
Open end: **S-UKFL···D1**
Closed end: **SM-UKFL···D1**

| Shaft dia. mm / inch | Unit number 1) 2) 3) | Nominal dimensions mm / inch: H | J | A2 | A1 | A | N | L | A0 | B1 | F min. | Bolt size mm / inch | Bearing number 2) 3) |
|---|---|---|---|---|---|---|---|---|---|---|---|---|---|
| 20 | UKFL205D1;H2305X | 130 | 99 | 16 | 13 | 27 | 16 | 68 | 35.5 | 35 | 30 | M14 | UK205D1;H2305X |
| 3/4 | UKFL205D1;HE2305 | 5 1/8 | 3 57/64 | 5/8 | 1/2 | 1 1/16 | 5/8 | 2 11/16 | 1 25/64 | 1.378 | 1 3/16 | 1/2 | UK205D1;HE2305 |
| 25 | UKFL206D1;H2306X | 148 | 117 | 18 | 13 | 31 | 16 | 80 | 39 | 38 | 36 | M14 | UK206D1;H2306X |
| 7/8 | UKFL206D1;HS2306 | 5 13/16 | 4 39/64 | 45/64 | 1/2 | 1 7/32 | 5/8 | 3 5/32 | 1 17/32 | 1.496 | 1 13/32 | 1/2 | UK206D1;HS2306 |
| 1 | UKFL206D1;HE2306X | | | | | | | | | | | | UK206D1;HE2306X |
| 30 | UKFL207D1;H2307X | 161 | 130 | 19 | 15 | 34 | 16 | 90 | 42.5 | 43 | 40 | M14 | UK207D1;H2307X |
| 1 1/8 | UKFL207D1;HS2307 | 6 11/32 | 5 1/8 | 3/4 | 19/32 | 1 11/32 | 5/8 | 3 17/32 | 1 43/64 | 1.693 | 1 9/16 | 1/2 | UK207D1;HS2307 |
| 35 | UKFL208D1;H2308X | 175 | 144 | 21 | 15 | 36 | 16 | 100 | 46.5 | 46 | 46 | M14 | UK208D1;H2308X |
| 1 1/4 | UKFL208D1;HE2308X | 6 7/8 | 5 43/64 | 53/64 | 19/32 | 1 13/32 | 5/8 | 3 15/16 | 1 53/64 | 1.811 | 1 13/16 | 1/2 | UK208D1;HE2308X |
| 1 3/8 | UKFL208D1;HS2308X | | | | | | | | | | | | UK208D1;HS2308X |
| 40 | UKFL209D1;H2309X | 188 | 148 | 22 | 16 | 38 | 19 | 108 | 48.5 | 50 | 52 | M16 | UK209D1;H2309X |
| 1 7/16 | UKFL209D1;HA2309 | | | | | | | | | | | | UK209D1;HA2309 |
| 1 1/2 | UKFL209D1;HE2309X | 7 13/32 | 5 53/64 | 55/64 | 5/8 | 1 1/2 | 3/4 | 4 1/4 | 1 29/32 | 1.969 | 2 1/16 | 5/8 | UK209D1;HE2309X |
| 1 5/8 | UKFL209D1;HS2309X | | | | | | | | | | | | UK209D1;HS2309X |
| 45 | UKFL210D1;H2310X | 197 | 157 | 22 | 16 | 40 | 19 | 115 | 50 | 55 | 57 | M16 | UK210D1;H2310X |
| 1 5/8 | UKFL210D1;HS2310 | | | | | | | | | | | | UK210D1;HS2310 |
| 1 11/16 | UKFL210D1;HA2310 | 7 3/4 | 6 3/16 | 55/64 | 5/8 | 1 9/16 | 3/4 | 4 17/32 | 1 31/32 | 2.165 | 2 1/4 | 5/8 | UK210D1;HA2310 |
| 1 3/4 | UKFL210D1;HE2310X | | | | | | | | | | | | UK210D1;HE2310X |
| 50 | UKFL211D1;H2311X | 224 | 184 | 25 | 18 | 43 | 19 | 130 | 54.5 | 59 | 64 | M16 | UK211D1;H2311X |
| 1 7/8 | UKFL211D1;HS2311 | | | | | | | | | | | | UK211D1;HS2311 |
| 1 15/16 | UKFL211D1;HA2311 | 8 13/16 | 7 1/4 | 63/64 | 23/32 | 1 11/16 | 3/4 | 5 1/8 | 2 9/64 | 2.323 | 2 17/32 | 5/8 | UK211D1;HA2311 |
| 2 | UKFL211D1;HE2311XY | | | | | | | | | | | | UK211D1;HE2311XY |
| 55 | UKFL212D1;H2312X | 250 | 202 | 29 | 18 | 48 | 23 | 140 | 61 | 62 | 69 | M20 | UK212D1;H2312X |
| 2 1/8 | UKFL212D1;HS2312 | 9 27/32 | 7 61/64 | 1 9/64 | 23/32 | 1 7/8 | 29/32 | 5 1/2 | 2 13/32 | 2.441 | 2 23/32 | 3/4 | UK212D1;HS2312 |
| 60 | UKFL213D1;H2313X | 258 | 210 | 30 | 22 | 50 | 23 | 155 | 64 | 65 | 74 | M20 | UK213D1;H2313X |
| 2 3/16 | UKFL213D1;HA2313 | | | | | | | | | | | | UK213D1;HA2313 |
| 2 1/4 | UKFL213D1;HE2313X | 10 5/32 | 8 17/64 | 1 3/16 | 7/8 | 1 31/32 | 29/32 | 6 3/32 | 2 33/64 | 2.559 | 2 29/32 | 3/4 | UK213D1;HE2313X |
| 2 3/8 | UKFL213D1;HS2313X | | | | | | | | | | | | UK213D1;HS2313X |

Remarks: 1) These numbers indicate relubricatable type. If maintenance free type is needed, please order without suffix "D1".
2) Adapter number with suffix "X" means a narrow slot type adapter sleeve.
In this case the lock washer with the straight inner prong should be used.
3) For HE2311XY, screw thread pitch different from the standard is applied, because of the thin thread section of sleeve.
To distinguish it, a suffix "Y" is added.
4) If the inch series housing units with dust cover are ordered with a closed end, the suffixes E, S or A are not included.
Example: SM-UKFL205D1; HE2305

Note: Please refer to page 36 for size of grease fitting.

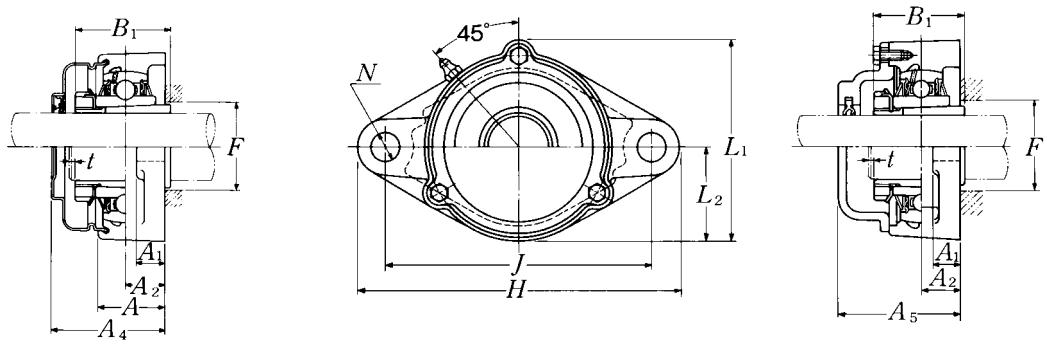


**Cast dust cover type**
Open end: **C-UKFL···D1**
Closed end: **CM-UKFL···D1**

| Housing[1] number | Unit number [1) 2) 3) 4)] pressed steel dust cover type | Unit number [1) 2) 3) 4)] cast dust cover type | Nominal dimensions mm $t$ max. | $A_4$ | $A_5$ | inch $L_1$ | $L_2$ | Mass of unit kg UKFL | S(SM) | lb C(CM) |
|---|---|---|---|---|---|---|---|---|---|---|
| FL205D1 | S(SM)-UKFL205D1;H2305X | C(CM)-UKFL205D1;H2305X | 2 | 44.5 | 51 | 74 | 34 | 0.6 | 0.7 | 0.8 |
| FL205D1 | S(SM)-UKFL205ED1;HE2305 | C(CM)-UKFL205ED1;HE2305 | 5/64 | 1 3/4 | 2 | 2 29/32 | 1 11/32 | 1.3 | 1.5 | 1.8 |
| FL206D1 | S(SM)-UKFL206D1;H2306X | C(CM)-UKFL206D1;H2306X | 2 | 49 | 56 | 85 | 40 | 0.9 | 1.0 | 1.2 |
| FL206D1 | S(SM)-UKFL206SD1;HS2306 | C(CM)-UKFL206SD1;HS2306 | 5/64 | 1 15/16 | 2 7/32 | 3 11/32 | 1 9/16 | 2.0 | 2.2 | 2.7 |
| FL206D1 | S(SM)-UKFL206ED1;HE2306X | C(CM)-UKFL206ED1;HE2306X | | | | | | | | |
| FL207D1 | S(SM)-UKFL207D1;H2307X | C(CM)-UKFL207D1;H2307X | 3 | 55 | 59 | 97 | 45 | 1.3 | 1.3 | 1.6 |
| FL207D1 | S(SM)-UKFL207SD1;HS2307 | C(CM)-UKFL207SD1;HS2307 | 1/8 | 2 5/32 | 2 5/16 | 3 13/16 | 1 25/32 | 2.9 | 2.9 | 3.5 |
| FL208D1 | S(SM)-UKFL208D1;H2308X | C(CM)-UKFL208D1;H2308X | 3 | 62 | 66 | 106 | 50 | 1.6 | 1.7 | 2.1 |
| FL208D1 | S(SM)-UKFL208ED1;HE2308X | C(CM)-UKFL208ED1;HE2308X | 1/8 | 2 7/16 | 2 19/32 | 4 3/16 | 1 31/32 | 3.5 | 3.7 | 4.6 |
| FL208D1 | S(SM)-UKFL208SD1;HS2308X | C(CM)-UKFL208SD1;HS2308X | | | | | | | | |
| FL209D1 | S(SM)-UKFL209D1;H2309X | C(CM)-UKFL209D1;H2309X | 3 | 63 | 70 | 113 | 54 | 2.0 | 2.1 | 2.5 |
| FL209D1 | S(SM)-UKFL209AD1;HA2309 | C(CM)-UKFL209AD1;HA2309 | | | | | | | | |
| FL209D1 | S(SM)-UKFL209ED1;HE2309X | C(CM)-UKFL209ED1;HE2309X | 1/8 | 2 15/32 | 2 3/4 | 4 7/16 | 2 1/8 | 4.4 | 4.6 | 5.5 |
| FL209D1 | S(SM)-UKFL209SD1;HS2309X | C(CM)-UKFL209SD1;HS2309X | | | | | | | | |
| FL210D1 | S(SM)-UKFL210D1;H2310X | C(CM)-UKFL210D1;H2310X | 3 | 65.5 | 72 | 120 | 58 | 2.2 | 2.4 | 2.9 |
| FL210D1 | S(SM)-UKFL210SD1;HS2310 | C(CM)-UKFL210SD1;HS2310 | | | | | | | | |
| FL210D1 | S(SM)-UKFL210AD1;HA2310 | C(CM)-UKFL210AD1;HA2310 | 1/8 | 2 19/32 | 2 27/32 | 4 23/32 | 2 9/32 | 4.9 | 5.3 | 6.4 |
| FL210D1 | S(SM)-UKFL210ED1;HE2310X | C(CM)-UKFL210ED1;HE2310X | | | | | | | | |
| FL211D1 | S(SM)-UKFL211D1;H2311X | C(CM)-UKFL211D1;H2311X | 4 | 71 | 75 | 133 | 65 | 3.1 | 3.4 | 3.7 |
| FL211D1 | S(SM)-UKFL211SD1;HS2311 | C(CM)-UKFL211SD1;HS2311 | | | | | | | | |
| FL211D1 | S(SM)-UKFL211AD1;HA2311 | C(CM)-UKFL211AD1;HA2311 | 5/32 | 2 25/32 | 2 15/16 | 5 1/4 | 2 9/16 | 6.8 | 7.5 | 8.2 |
| FL211D1 | S(SM)-UKFL211ED1;HE2311XY | C(CM)-UKFL211ED1;HE2311XY | | | | | | | | |
| FL212D1 | S(SM)-UKFL212D1;H2312X | C(CM)-UKFL212D1;H2312X | 4 | 80 | 86 | 144 | 70 | 3.9 | 4.2 | 4.7 |
| FL212D1 | S(SM)-UKFL212SD1;HS2312 | C(CM)-UKFL212SD1;HS2312 | 5/32 | 3 5/32 | 3 3/8 | 5 21/32 | 2 3/4 | 8.6 | 9.3 | 10 |
| FL213D1 | S(SM)-UKFL213D1;H2313X | C(CM)-UKFL213D1;H2313X | 4 | 83.5 | 90 | 157 | 78 | 5.0 | 5.4 | 6.0 |
| FL213D1 | S(SM)-UKFL213AD1;HA2313 | C(CM)-UKFL213AD1;HA2313 | | | | | | | | |
| FL213D1 | S(SM)-UKFL213ED1;HE2313X | C(CM)-UKFL213ED1;HE2313X | 5/32 | 3 9/32 | 3 17/32 | 6 3/16 | 3 1/16 | 11 | 12 | 13 |
| FL213D1 | S(SM)-UKFL213SD1;HS2313X | C(CM)-UKFL213SD1;HS2313X | | | | | | | | |

## Rhombus flanged units cast housing
## Adapter type

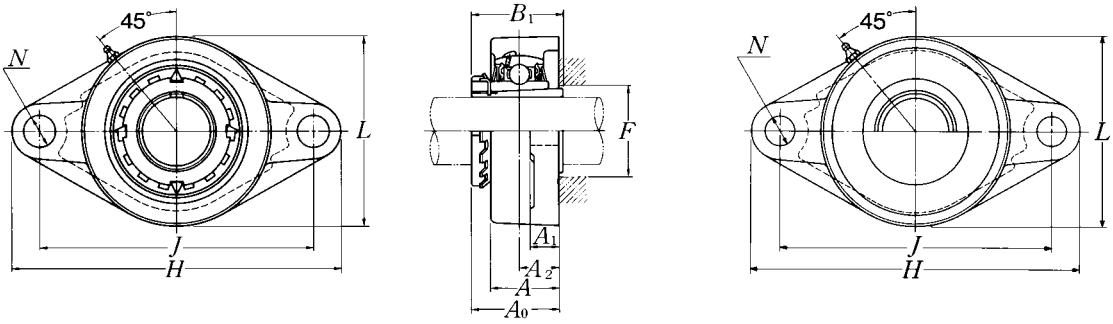


**Pressed steel dust cover type**
Open end: **S-UKFL···D1**
Closed end: **SM-UKFL···D1**

| Shaft dia. mm / inch | Unit number 1) 2) 3) | Nominal dimensions mm / inch: H | J | A2 | A1 | A | N | L | A0 | B1 | F min. | Bolt size mm / inch | Bearing number 2) 3) |
|---|---|---|---|---|---|---|---|---|---|---|---|---|---|
| **65** | **UKFL215D1;H2315X** | 275 | 225 | 34 | 22 | 56 | 23 | 165 | 71 | 73 | 84 | M20 | UK215D1;H2315X |
| **2 7/16** | **UKFL215D1;HA2315** | 10 13/16 | 8 55/64 | 1 11/32 | 7/8 | 2 7/32 | 29/32 | 6 1/2 | 2 51/64 | 2.874 | 3 5/16 | 3/4 | UK215D1;HA2315 |
| **2 1/2** | **UKFL215D1;HE2315X** | | | | | | | | | | | | UK215D1;HE2315X |
| **70** | **UKFL216D1;H2316X** | 290 | 233 | 34 | 22 | 58 | 25 | 180 | 73.5 | 78 | 90 | M22 | UK216D1;H2316X |
| **2 11/16** | **UKFL216D1;HA2316** | 11 13/32 | 9 11/64 | 1 11/32 | 7/8 | 2 9/32 | 63/64 | 7 3/32 | 2 57/64 | 3.071 | 3 17/32 | 7/8 | UK216D1;HA2316 |
| **2 3/4** | **UKFL216D1;HE2316X** | | | | | | | | | | | | UK216D1;HE2316X |
| **75** | **UKFL217D1;H2317X** | 305 | 248 | 36 | 24 | 63 | 25 | 190 | 77 | 82 | 95 | M22 | UK217D1;H2317X |
| **2 15/16** | **UKFL217D1;HA2317X** | 12 | 9 49/64 | 1 27/64 | 15/16 | 2 15/32 | 63/64 | 7 15/32 | 3 1/32 | 3.228 | 3 3/4 | 7/8 | UK217D1;HA2317X |
| **3** | **UKFL217D1;HE2317X** | | | | | | | | | | | | UK217D1;HE2317X |
| **80** | **UKFL218D1;H2318X** | 320 | 265 | 40 | 24 | 68 | 25 | 205 | 81.5 | 86 | 102 | M22 | UK218D1;H2318X |
| **3 3/16** | **UKFL218D1;HA2318X** | 12 19/32 | 10 7/16 | 1 37/64 | 15/16 | 2 11/16 | 63/64 | 8 1/16 | 3 13/64 | 3.386 | 4 1/32 | 7/8 | UK218D1;HA2318X |

Remarks: 1) These numbers indicate relubricatable type. If maintenance free type is needed, please order without suffix "D1".
2) Adapter number with suffix "X" means a narrow slot type adapter sleeve.
In this case the lock washer with the straight inner prong should be used.
3) For HE2311XY, screw thread pitch different from the standard is applied, because of the thin thread section of sleeve.
To distinguish it, a suffix "Y" is added.
4) If the inch series housing units with dust cover are ordered with a closed end, the suffixes E, S or A are not included.
Example: SM-UKFL205D1; HE2305

Note: Please refer to page 36 for size of grease fitting.

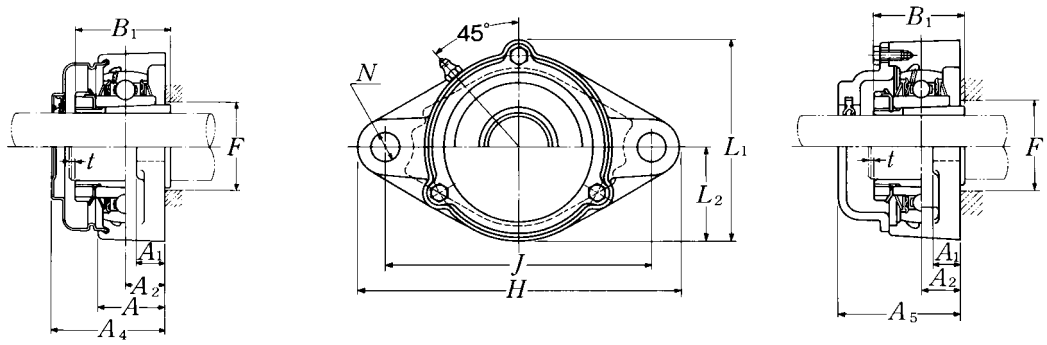


**Cast dust cover type**
Open end: **C-UKFL···D1**
Closed end: **CM-UKFL···D1**

| Housing[1] number | Unit number [1) 2) 3) 4)] pressed steel dust cover type | Unit number [1) 2) 3) 4)] cast dust cover type | Nominal dimensions mm $t$ max. | $A_4$ | $A_5$ | inch $L_1$ | $L_2$ | Mass of unit kg UKFL | S(SM) | lb C(CM) |
|---|---|---|---|---|---|---|---|---|---|---|
| FL215D1 | — | C(CM)-UKFL215D1;H2315X | 4 | — | 102 | 169 | 82 | 6.2 | — | 7.6 |
| FL215D1 | — | C(CM)-UKFL215AD1;HA2315 | 5/32 | — | 4 1/32 | 6 21/32 | 3 7/32 | 14 | — | 17 |
| FL215D1 | | C(CM)-UKFL215ED1;HE2315X | | | | | | | | |
| FL216D1 | — | C(CM)-UKFL216D1;H2316X | 4 | — | 106 | 183 | 90 | 7.9 | — | 9.3 |
| FL216D1 | — | C(CM)-UKFL216AD1;HA2316 | 5/32 | — | 4 3/16 | 7 7/32 | 3 17/32 | 17 | — | 21 |
| FL216D1 | | C(CM)-UKFL216ED1;HE2316X | | | | | | | | |
| FL217D1 | — | C(CM)-UKFL217D1;H2317X | 5 | — | 114 | 192 | 95 | 9.2 | — | 11 |
| FL217D1 | — | C(CM)-UKFL217AD1;HA2317X | 13/64 | — | 4 1/2 | 7 9/16 | 3 3/4 | 20 | — | 24 |
| FL217D1 | | C(CM)-UKFL217ED1;HE2317X | | | | | | | | |
| FL218D1 | — | C(CM)-UKFL218D1;H2318X | 5 | — | 122 | 205 | 102 | 11 | — | 13 |
| FL218D1 | — | C(CM)-UKFL218AD1;HA2318X | 13/64 | — | 4 13/16 | 8 1/16 | 4 1/32 | 24 | — | 29 |

## Rhombus flanged units cast housing
## Adapter type

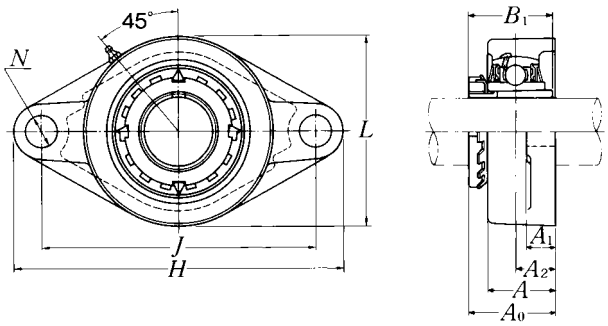


| Shaft dia. mm / inch | Unit number 1) 2) 3) | Nominal dimensions mm / inch H | J | A2 | A1 | A | N | L | A0 | B1 | Bolt size mm / inch | Bearing number 2) 3) |
|---|---|---|---|---|---|---|---|---|---|---|---|---|
| 20 | UKFL305D1;H2305X | 150 | 113 | 16 | 13 | 29 | 19 | 80 | 37 | 35 | M16 | UK305D1;H2305X |
| 3/4 | UKFL305D1;HE2305 | 5 29/32 | 4 29/64 | 5/8 | 1/2 | 1 5/32 | 3/4 | 3 5/32 | 1 29/64 | 1.378 | 5/8 | UK305D1;HE2305 |
| 25 | UKFL306D1;H2306X | 180 | 134 | 18 | 15 | 32 | 23 | 90 | 40.5 | 38 | M20 | UK306D1;H2306X |
| 7/8 | UKFL306D1;HS2306 | 7 3/32 | 5 9/32 | 45/64 | 19/32 | 1 1/4 | 29/32 | 3 17/32 | 1 19/32 | 1.496 | 3/4 | UK306D1;HS2306 |
| 1 | UKFL306D1;HE2306X | | | | | | | | | | | UK306D1;HE2306X |
| 30 | UKFL307D1;H2307X | 185 | 141 | 20 | 16 | 36 | 23 | 100 | 45.5 | 43 | M20 | UK307D1;H2307X |
| 1 1/8 | UKFL307D1;HS2307 | 7 9/32 | 5 35/64 | 25/32 | 5/8 | 1 13/32 | 29/32 | 3 15/16 | 1 51/64 | 1.693 | 3/4 | UK307D1;HS2307 |
| 35 | UKFL308D1;H2308X | 200 | 158 | 23 | 17 | 40 | 23 | 112 | 50 | 46 | M20 | UK308D1;H2308X |
| 1 1/4 | UKFL308D1;HE2308X | 7 7/8 | 6 7/32 | 29/32 | 21/32 | 1 9/16 | 29/32 | 4 13/32 | 1 31/32 | 1.811 | 3/4 | UK308D1;HE2308X |
| 1 3/8 | UKFL308D1;HS2308X | | | | | | | | | | | UK308D1;HS2308X |
| 40 | UKFL309D1;H2309X | 230 | 177 | 25 | 18 | 44 | 25 | 125 | 54.5 | 50 | M22 | UK309D1;H2309X |
| 1 7/16 | UKFL309D1;HA2309 | | | | | | | | | | | UK309D1;HA2309 |
| 1 1/2 | UKFL309D1;HE2309X | 9 1/16 | 6 31/32 | 63/64 | 23/32 | 1 23/32 | 63/64 | 4 29/32 | 2 9/64 | 1.969 | 7/8 | UK309D1;HE2309X |
| 1 5/8 | UKFL309D1;HS2309X | | | | | | | | | | | UK309D1;HS2309X |
| 45 | UKFL310D1;H2310X | 240 | 187 | 28 | 19 | 48 | 25 | 140 | 60.5 | 55 | M22 | UK310D1;H2310X |
| 1 5/8 | UKFL310D1;HS2310 | | | | | | | | | | | UK310D1;HS2310 |
| 1 11/16 | UKFL310D1;HA2310 | 9 7/16 | 7 23/64 | 1 7/64 | 3/4 | 1 7/8 | 63/64 | 5 1/2 | 2 3/8 | 2.165 | 7/8 | UK310D1;HA2310 |
| 1 3/4 | UKFL310D1;HE2310X | | | | | | | | | | | UK310D1;HE2310X |
| 50 | UKFL311D1;H2311X | 250 | 198 | 30 | 20 | 52 | 25 | 150 | 64 | 59 | M22 | UK311D1;H2311X |
| 1 7/8 | UKFL311D1;HS2311 | | | | | | | | | | | UK311D1;HS2311 |
| 1 15/16 | UKFL311D1;HA2311 | 9 27/32 | 7 51/64 | 1 3/16 | 25/32 | 2 1/16 | 63/64 | 5 29/32 | 2 33/64 | 2.323 | 7/8 | UK311D1;HA2311 |
| 2 | UKFL311D1;HE2311XY | | | | | | | | | | | UK311D1;HE2311XY |
| 55 | UKFL312D1;H2312X | 270 | 212 | 33 | 22 | 56 | 31 | 160 | 69.5 | 62 | M27 | UK312D1;H2312X |
| 2 1/8 | UKFL312D1;HS2312 | 10 5/8 | 8 11/32 | 1 19/64 | 7/8 | 2 7/32 | 1 7/32 | 6 5/16 | 2 47/64 | 2.441 | 1 | UK312D1;HS2312 |
| 60 | UKFL313D1;H2313X | 295 | 240 | 33 | 25 | 58 | 31 | 175 | 71.5 | 65 | M27 | UK313D1;H2313X |
| 2 3/16 | UKFL313D1;HA2313 | | | | | | | | | | | UK313D1;HA2313 |
| 2 1/4 | UKFL313D1;HE2313X | 11 5/8 | 9 29/64 | 1 19/64 | 31/32 | 2 9/32 | 1 7/32 | 6 7/8 | 2 13/16 | 2.559 | 1 | UK313D1;HE2313X |
| 2 3/8 | UKFL313D1;HS2313X | | | | | | | | | | | UK313D1;HS2313X |

Remarks: 1) These numbers indicate relubricatable type. If maintenance free type is needed, please order without suffix "D1".
2) Adapter number with suffix "X" means a narrow slot type adapter sleeve.
In this case the lock washer with the straight inner prong should be used.
3) For HE2311XY, screw thread pitch different from the standard is applied, because of the thin thread section of sleeve.
To distinguish it, a suffix "Y" is added.
4) If the inch series housing units with dust cover are ordered with a closed end, the suffixes E, S or A are not included.
Example: CM-UKFL305D1; HE2305

Note: Please refer to page 36 for size of grease fitting.

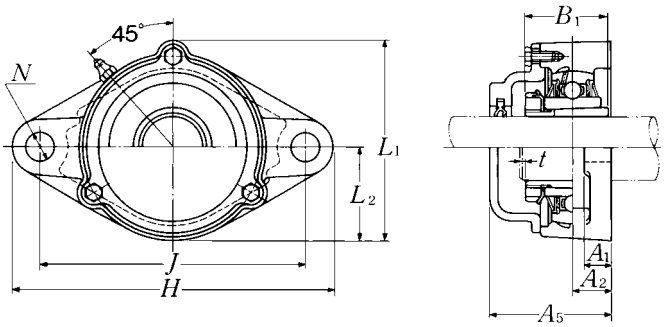


**Cast dust cover type**
Open end: **C-UKFL···D1**
Closed end: **CM-UKFL···D1**

| Housing[1] number | Unit number [1) 2) 3) 4)] cast dust cover type | Nominal dimensions | | | | Mass of unit | |
|---|---|---|---|---|---|---|---|
| | | mm / inch | | | | kg / lb | |
| | | $t$ max. | $A_5$ | $L_1$ | $L_2$ | UKFL | C(CM) |
| FL305D1 | C(CM)-UKFL305D1;H2305X | 2 | 56 | 86 | 40 | 1.0 | 1.3 |
| FL305D1 | C(CM)-UKFL305ED1;HE2305 | 5/64 | 2 7/32 | 3 3/8 | 1 9/16 | 2.2 | 2.9 |
| FL306D1 | C(CM)-UKFL306D1;H2306X | 2 | 60 | 101 | 45 | 1.5 | 1.8 |
| FL306D1 | C(CM)-UKFL306SD1;HS2306 | 5/64 | 2 3/8 | 3 31/32 | 1 25/32 | 3.3 | 4.0 |
| FL306D1 | C(CM)-UKFL306ED1;HE2306X | | | | | | |
| FL307D1 | C(CM)-UKFL307D1;H2307X | 3 | 68 | 110 | 50 | 1.8 | 2.2 |
| FL307D1 | C(CM)-UKFL307SD1;HS2307 | 1/8 | 2 11/16 | 4 11/32 | 1 31/32 | 4.0 | 4.9 |
| FL308D1 | C(CM)-UKFL308D1;H2308X | 3 | 76 | 122 | 56 | 2.2 | 3.0 |
| FL308D1 | C(CM)-UKFL308ED1;HE2308X | 1/8 | 3 | 4 13/16 | 2 7/32 | 4.9 | 6.6 |
| FL308D1 | C(CM)-UKFL308SD1;HS2308X | | | | | | |
| FL309D1 | C(CM)-UKFL309D1;H2309X | 3 | 80 | 135 | 62 | 3.0 | 3.9 |
| FL309D1 | C(CM)-UKFL309AD1;HA2309 | | | | | | |
| FL309D1 | C(CM)-UKFL309ED1;HE2309X | 1/8 | 3 5/32 | 5 5/16 | 2 7/16 | 6.6 | 8.6 |
| FL309D1 | C(CM)-UKFL309SD1;HS2309X | | | | | | |
| FL310D1 | C(CM)-UKFL310D1;H2310X | 3 | 88 | 152 | 70 | 4.1 | 5.1 |
| FL310D1 | C(CM)-UKFL310SD1;HS2310 | | | | | | |
| FL310D1 | C(CM)-UKFL310AD1;HA2310 | 1/8 | 3 15/32 | 5 31/32 | 2 3/4 | 9.0 | 11 |
| FL310D1 | C(CM)-UKFL310ED1;HE2310X | | | | | | |
| FL311D1 | C(CM)-UKFL311D1;H2311X | 4 | 92 | 162 | 75 | 4.6 | 6.0 |
| FL311D1 | C(CM)-UKFL311SD1;HS2311 | | | | | | |
| FL311D1 | C(CM)-UKFL311AD1;HA2311 | 5/32 | 3 5/8 | 6 3/8 | 2 15/16 | 10 | 13 |
| FL311D1 | C(CM)-UKFL311ED1;HE2311XY | | | | | | |
| FL312D1 | C(CM)-UKFL312D1;H2312X | 4 | 100 | 175 | 80 | 5.7 | 7.7 |
| FL312D1 | C(CM)-UKFL312SD1;HS2312 | 5/32 | 3 15/16 | 6 7/8 | 3 5/32 | 13 | 17 |
| FL313D1 | C(CM)-UKFL313D1;H2313X | 4 | 103 | 189 | 88 | 7.4 | 9.8 |
| FL313D1 | C(CM)-UKFL313AD1;HA2313 | | | | | | |
| FL313D1 | C(CM)-UKFL313ED1;HE2313X | 5/32 | 4 1/16 | 7 7/16 | 3 15/32 | 16 | 22 |
| FL313D1 | C(CM)-UKFL313SD1;HS2313X | | | | | | |

## Rhombus flanged units cast housing
## Adapter type

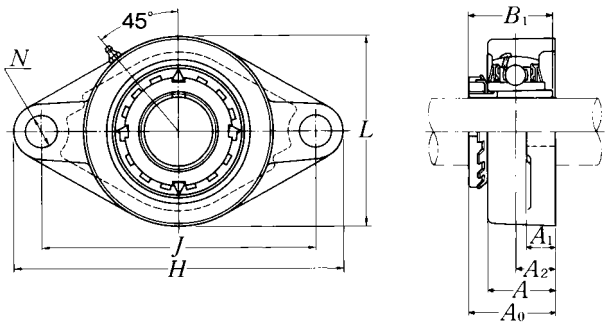


| Shaft dia. mm / inch | Unit number 1) 2) 3) | Nominal dimensions mm / inch H | J | A2 | A1 | A | N | L | A0 | B1 | Bolt size mm / inch | Bearing number 2) 3) |
|---|---|---|---|---|---|---|---|---|---|---|---|---|
| 65<br>2 7/16<br>2 1/2 | UKFL315D1;H2315X<br>UKFL315D1;HA2315<br>UKFL315D1;HE2315X | 320<br>12 19/32 | 260<br>10 15/64 | 39<br>1 17/32 | 30<br>1 3/16 | 66<br>2 19/32 | 35<br>1 3/8 | 195<br>7 11/16 | 81.5<br>3 13/64 | 73<br>2.874 | M30<br>1 1/8 | UK315D1;H2315X<br>UK315D1;HA2315<br>UK315D1;HE2315X |
| 70<br>2 11/16<br>2 3/4 | UKFL316D1;H2316X<br>UKFL316D1;HA2316<br>UKFL316D1;HE2316X | 355<br>13 31/32 | 285<br>11 7/32 | 38<br>1 1/2 | 32<br>1 1/4 | 68<br>2 11/16 | 38<br>1 1/2 | 210<br>8 9/32 | 84<br>3 5/16 | 78<br>3.071 | M33<br>1 1/4 | UK316D1;H2316X<br>UK316D1;HA2316<br>UK316D1;HE2316X |
| 75<br>2 15/16<br>3 | UKFL317D1;H2317X<br>UKFL317D1;HA2317X<br>UKFL317D1;HE2317X | 370<br>14 9/16 | 300<br>11 13/16 | 44<br>1 47/64 | 32<br>1 1/4 | 74<br>2 29/32 | 38<br>1 1/2 | 220<br>8 21/32 | 92<br>3 5/8 | 82<br>3.228 | M33<br>1 1/4 | UK317D1;H2317X<br>UK317D1;HA2317X<br>UK317D1;HE2317X |
| 80<br>3 3/16 | UKFL318D1;H2318X<br>UKFL318D1;HA2318X | 385<br>15 5/32 | 315<br>12 13/32 | 44<br>1 47/64 | 36<br>1 13/32 | 76<br>3 | 38<br>1 1/2 | 235<br>9 1/4 | 94<br>3 45/64 | 86<br>3.386 | M33<br>1 1/4 | UK318D1;H2318X<br>UK318D1;HA2318X |
| 85<br>3 1/4 | UKFL319D1;H2319X<br>UKFL319D1;HE2319X | 405<br>15 15/16 | 330<br>12 63/64 | 59<br>2 21/64 | 40<br>1 9/16 | 94<br>3 11/16 | 41<br>1 39/64 | 250<br>9 27/32 | 111.5<br>4 25/64 | 90<br>3.543 | M36<br>1 3/8 | UK319D1;H2319X<br>UK319D1;HE2319X |
| 90<br>3 7/16<br>3 1/2 | UKFL320D1;H2320X<br>UKFL320D1;HA2320<br>UKFL320D1;HE2320X | 440<br>17 5/16 | 360<br>14 11/64 | 59<br>2 21/64 | 40<br>1 9/16 | 94<br>3 11/16 | 44<br>1 47/64 | 270<br>10 5/8 | 115.5<br>4 35/64 | 97<br>3.819 | M39<br>1 1/2 | UK320D1;H2320X<br>UK320D1;HA2320<br>UK320D1;HE2320X |
| 100 | UKFL322D1;H2322X | 470 | 390 | 60 | 42 | 96 | 44 | 300 | 121 | 105 | M39 | UK322D1;H2322X |
| 110 | UKFL324D1;H2324X | 520 | 430 | 65 | 48 | 110 | 47 | 330 | 130 | 112 | M42 | UK324D1;H2324X |
| 115 | UKFL326D1;H2326 | 550 | 460 | 65 | 50 | 115 | 47 | 360 | 133 | 121 | M42 | UK326D1;H2326 |
| 125 | UKFL328D1;H2328 | 600 | 500 | 75 | 60 | 125 | 51 | 400 | 146.5 | 131 | M45 | UK328D1;H2328 |

Remarks: 1) These numbers indicate relubricatable type. If maintenance free type is needed, please order without suffix "D1".
2) Adapter number with suffix "X" means a narrow slot type adapter sleeve.
In this case the lock washer with the straight inner prong should be used.
3) For HE2311XY, screw thread pitch different from the standard is applied, because of the thin thread section of sleeve.
To distinguish it, a suffix "Y" is added.
4) If the inch series housing units with dust cover are ordered with a closed end, the suffixes E, S or A are not included.
Example: CM-UKFL305D1; HE2305

Note: Please refer to page 36 for size of grease fitting.

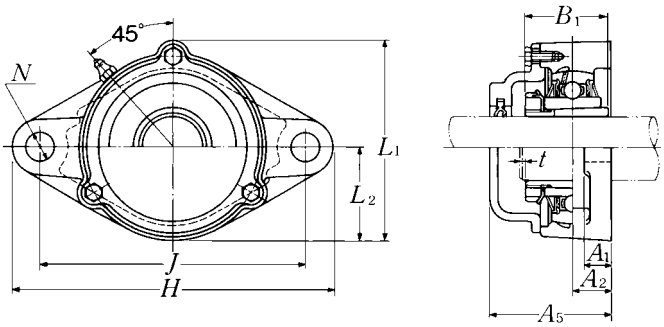


**Cast dust cover type**
Open end: **C-UKFL···D1**
Closed end: **CM-UKFL···D1**

| Housing[1] number | Unit number [1) 2) 3) 4)] cast dust cover type | Nominal dimensions | | | | Mass of unit | |
|---|---|---|---|---|---|---|---|
| | | mm / inch | | | | kg / lb | |
| | | $t$ max. | $A_5$ | $L_1$ | $L_2$ | UKFL | C(CM) |
| FL315D1 | C(CM)-UKFL315D1;H2315X | 4 | 114 | 210 | 98 | 9.9 | 13 |
| FL315D1 | C(CM)-UKFL315AD1;HA2315 | 5/32 | 4 1/2 | 8 9/32 | 3 27/32 | 22 | 29 |
| FL315D1 | C(CM)-UKFL315ED1;HE2315X | | | | | | |
| FL316D1 | C(CM)-UKFL316D1;H2316X | 4 | 116 | 222 | 105 | 13 | 17 |
| FL316D1 | C(CM)-UKFL316AD1;HA2316 | 5/32 | 4 9/16 | 8 3/4 | 4 1/8 | 29 | 37 |
| FL316D1 | C(CM)-UKFL316ED1;HE2316X | | | | | | |
| FL317D1 | C(CM)-UKFL317D1;H2317X | 5 | 127 | 234 | 110 | 15 | 18 |
| FL317D1 | C(CM)-UKFL317AD1;HA2317X | 13/64 | 5 | 9 7/32 | 4 11/32 | 33 | 40 |
| FL317D1 | C(CM)-UKFL317ED1;HE2317X | | | | | | |
| FL318D1 | C(CM)-UKFL318D1;H2318X | 5 | 129 | 247 | 118 | 18 | 22 |
| FL318D1 | C(CM)-UKFL318AD1;HA2318X | 13/64 | 5 3/32 | 9 23/32 | 4 21/32 | 40 | 49 |
| FL319D1 | C(CM)-UKFL319D1;H2319X | 5 | 149 | 260 | 125 | 22 | 27 |
| FL319D1 | C(CM)-UKFL319ED1;HE2319X | 13/64 | 5 7/8 | 10 1/4 | 4 29/32 | 49 | 60 |
| FL320D1 | C(CM)-UKFL320D1;H2320X | 5 | 154 | 280 | 135 | 26 | 32 |
| FL320D1 | C(CM)-UKFL320AD1;HA2320 | 13/64 | 6 1/16 | 11 1/32 | 5 5/16 | 57 | 71 |
| FL320D1 | C(CM)-UKFL320ED1;HE2320X | | | | | | |
| FL322D1 | C(CM)-UKFL322D1;H2322X | 5 | 160 | 315 | 150 | 34 | 41 |
| FL324D1 | C(CM)-UKFL324D1;H2324X | 5 | 172 | 342 | 165 | 47 | 52 |
| FL326D1 | C(CM)-UKFL326D1;H2326 | 6 | 178 | 376 | 180 | 58 | 65 |
| FL328D1 | C(CM)-UKFL328D1;H2328 | 6 | 192 | 410 | 200 | 82 | 90 |

## Rhombus flanged units cast housing
## Adapter type

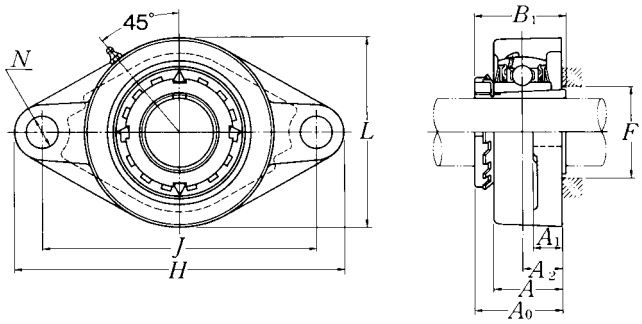


| Shaft dia. mm / inch | Unit number 1) 2) | Nominal dimensions H | J | A2 | A1 | A | N | L | A0 | B1 | F min. | Bolt size mm / inch |
|---|---|---|---|---|---|---|---|---|---|---|---|---|
| | | mm | | | | | inch | | | | | |
| 20 | UKFLX05D1;H2305X | 141 | 117 | 18 | 13 | 30 | 12 | 83 | 39 | 35 | 30 | M10 |
| 3/4 | UKFLX05D1;HE2305 | 5 9/16 | 4 39/64 | 45/64 | 1/2 | 1 3/16 | 15/32 | 3 9/32 | 1 17/32 | 1.378 | 1 3/16 | 3/8 |
| 25 | UKFLX06D1;H2306X | 156 | 130 | 19 | 15 | 34 | 16 | 95 | 41.5 | 38 | 36 | M14 |
| 7/8 | UKFLX06D1;HS2306 | 6 5/32 | 5 1/8 | 3/4 | 19/32 | 1 11/32 | 5/8 | 3 3/4 | 1 41/64 | 1.496 | 1 13/32 | 1/2 |
| 1 | UKFLX06D1;HE2306X | | | | | | | | | | | |
| 30 | UKFLX07D1;H2307X | 171 | 144 | 21 | 16 | 38 | 16 | 105 | 45.5 | 43 | 40 | M14 |
| 1 1/8 | UKFLX07D1;HS2307 | 6 23/32 | 5 43/64 | 53/64 | 5/8 | 1 1/2 | 5/8 | 4 1/8 | 1 51/64 | 1.693 | 1 9/16 | 1/2 |
| 35 | UKFLX08D1;H2308X | 179 | 148 | 22 | 16 | 40 | 16 | 111 | 47.5 | 46 | 46 | M14 |
| 1 1/4 | UKFLX08D1;HE2308X | 7 1/16 | 5 53/64 | 55/64 | 5/8 | 1 9/16 | 5/8 | 4 3/8 | 1 7/8 | 1.811 | 1 13/16 | 1/2 |
| 1 3/8 | UKFLX08D1;HS2308X | | | | | | | | | | | |
| 40 | UKFLX09D1;H2309X | 189 | 157 | 23 | 16 | 40 | 16 | 116 | 50 | 50 | 52 | M14 |
| 1 7/16 | UKFLX09D1;HA2309 | | | | | | | | | | | |
| 1 1/2 | UKFLX09D1;HE2309X | 7 7/16 | 6 3/16 | 29/32 | 5/8 | 1 9/16 | 5/8 | 4 9/16 | 1 31/32 | 1.969 | 2 1/16 | 1/2 |
| 1 5/8 | UKFLX09D1;HS2309X | | | | | | | | | | | |
| 45 | UKFLX10D1;H2310X | 216 | 184 | 26 | 18 | 44 | 19 | 133 | 55.5 | 55 | 57 | M16 |
| 1 5/8 | UKFLX10D1;HS2310 | | | | | | | | | | | |
| 1 11/16 | UKFLX10D1;HA2310 | 8 1/2 | 7 1/4 | 1 1/32 | 23/32 | 1 23/32 | 3/4 | 5 1/4 | 2 3/16 | 2.165 | 2 1/4 | 5/8 |
| 1 3/4 | UKFLX10D1;HE2310X | | | | | | | | | | | |

Remarks: 1) These numbers indicate relubricatable type. If maintenance free type is needed, please order without suffix "D1".
2) Adapter number with suffix "X" means a narrow slot type adapter sleeve.
In this case the lock washer with the straight inner prong should be used.
3) If the inch series housing units with dust cover are ordered with a closed end, the suffixes E, S or A are not included.
Example: CM-UKFLX05D1; HE2305

Note: Please refer to page 36 for size of grease fitting.

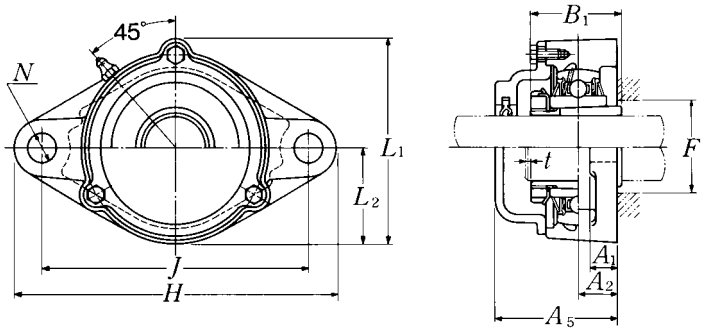


**Cast dust cover type**
Open end: **C-UKFLX···D1**
Closed end: **CM-UKFLX···D1**

| Bearing number 2) | Housing 1) number | Unit number 1) 2) 3) cast dust cover type | Nominal dimensions | | | | Mass of unit | |
|---|---|---|---|---|---|---|---|---|
| | | | mm / inch | | | | kg / lb | |
| | | | $t$ max. | $A_5$ | $L_1$ | $L_2$ | UKFLX | C(CM) |
| UKX05D1;H2305X | FLX05D1 | **C(CM)-UKFLX05D1;H2305X** | 2 | 56 | 86 | 41.5 | 1.0 | 1.2 |
| UKX05D1;HE2305 | FLX05D1 | **C(CM)-UKFLX05ED1;HE2305** | 5/64 | 2 7/32 | 3 3/8 | 1 5/8 | 2.2 | 2.7 |
| UKX06D1;H2306X | FLX06D1 | **C(CM)-UKFLX06D1;H2306X** | 2 | 59 | 98.5 | 49.5 | 1.4 | 1.6 |
| UKX06D1;HS2306 | FLX06D1 | **C(CM)-UKFLX06SD1;HS2306** | 5/64 | 2 5/16 | 3 7/8 | 1 15/16 | 3.1 | 3.5 |
| UKX06D1;HE2306X | FLX06D1 | **C(CM)-UKFLX06ED1;HE2306X** | | | | | | |
| UKX07D1;H2307X | FLX07D1 | **C(CM)-UKFLX07D1;H2307X** | 3 | 66 | 108.5 | 52.5 | 1.8 | 2.2 |
| UKX07D1;HS2307 | FLX07D1 | **C(CM)-UKFLX07SD1;HS2307** | 1/8 | 2 19/32 | 4 9/32 | 2 1/16 | 4.0 | 4.9 |
| UKX08D1;H2308X | FLX08D1 | **C(CM)-UKFLX08D1;H2308X** | 3 | 70 | 114.5 | 55.5 | 2.2 | 2.6 |
| UKX08D1;HE2308X | FLX08D1 | **C(CM)-UKFLX08ED1;HE2308X** | 1/8 | 2 3/4 | 4 1/2 | 2 3/16 | 4.9 | 5.7 |
| UKX08D1;HS2308X | FLX08D1 | **C(CM)-UKFLX08SD1;HS2308X** | | | | | | |
| UKX09D1;H2309X | FLX09D1 | **C(CM)-UKFLX09D1;H2309X** | 3 | 73 | 119.5 | 58 | 2.2 | 2.7 |
| UKX09D1;HA2309 | FLX09D1 | **C(CM)-UKFLX09AD1;HA2309** | | | | | | |
| UKX09D1;HE2309X | FLX09D1 | **C(CM)-UKFLX09ED1;HE2309X** | 1/8 | 2 7/8 | 4 23/32 | 2 9/32 | 4.9 | 6.0 |
| UKX09D1;HS2309X | FLX09D1 | **C(CM)-UKFLX09SD1;HS2309X** | | | | | | |
| UKX10D1;H2310X | FLX10D1 | **C(CM)-UKFLX10D1;H2310X** | 3 | 76 | 133.5 | 66.5 | 3.1 | 3.6 |
| UKX10D1;HS2310 | FLX10D1 | **C(CM)-UKFLX10SD1;HS2310** | | | | | | |
| UKX10D1;HA2310 | FLX10D1 | **C(CM)-UKFLX10AD1;HA2310** | 1/8 | 3 | 5 1/4 | 2 5/8 | 6.8 | 7.9 |
| UKX10D1;HE2310X | FLX10D1 | **C(CM)-UKFLX10ED1;HE2310X** | | | | | | |

## Take-up units cast housing
## Adapter type

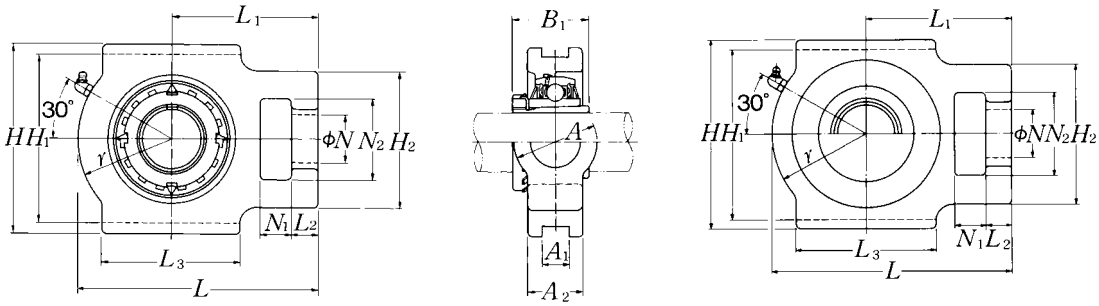


**Pressed steel dust cover type**
Open end: **S-UKT···D1**
Closed end: **SM-UKT···D1**

| Shaft dia. mm / inch | Unit number 1) 2) 3) | Nominal dimensions (mm / inch) $N_1$ | $L_2$ | $H_2$ | $N_2$ | $N$ | $L_3$ | $A_1$ | $H_1$ | $H$ | $L$ | $A_2$ | $A$ | $r$ | $L_1$ | $B_1$ | Bearing number 2) 3) |
|---|---|---|---|---|---|---|---|---|---|---|---|---|---|---|---|---|---|
| 20 | UKT205D1;H2305X | 16 | 12 | 51 | 32 | 19 | 51 | 12 | 76 | 89 | 97 | 24 | 32 | 35 | 62 | 35 | UK205D1;H2305X |
| 3/4 | UKT205D1;HE2305 | 5/8 | 15/32 | 2 | 1 1/4 | 3/4 | 2 | 0.472 | 2 63/64 | 3 1/2 | 3 13/16 | 15/16 | 1 1/4 | 1 3/8 | 2 7/16 | 1.378 | UK205D1;HE2305 |
| 25 | UKT206D1;H2306X | 16 | 12 | 56 | 37 | 22 | 57 | 12 | 89 | 102 | 113 | 28 | 37 | 43 | 70 | 38 | UK206D1;H2306X |
| 7/8 | UKT206D1;HS2306 | 5/8 | 15/32 | 2 7/32 | 1 15/32 | 7/8 | 2 1/4 | 0.472 | 3 1/2 | 4 1/32 | 4 7/16 | 1 3/32 | 1 15/32 | 1 11/16 | 2 3/4 | 1.496 | UK206D1;HS2306 |
| 1 | UKT206D1;HE2306X | | | | | | | | | | | | | | | | UK206D1;HE2306X |
| 30 | UKT207D1;H2307X | 16 | 15 | 64 | 37 | 22 | 64 | 12 | 89 | 102 | 129 | 30 | 37 | 51 | 78 | 43 | UK207D1;H2307X |
| 1 1/8 | UKT207D1;HS2307 | 5/8 | 19/32 | 2 17/32 | 1 15/32 | 7/8 | 2 17/32 | 0.472 | 3 1/2 | 4 1/32 | 5 3/32 | 1 3/16 | 1 15/32 | 2 | 3 1/16 | 1.693 | UK207D1;HS2307 |
| 35 | UKT208D1;H2308X | 19 | 18 | 83 | 49 | 29 | 83 | 16 | 102 | 114 | 144 | 33 | 49 | 56 | 88 | 46 | UK208D1;H2308X |
| 1 1/4 | UKT208D1;HE2308X | 3/4 | 23/32 | 3 9/32 | 1 15/16 | 1 5/32 | 3 9/32 | 0.630 | 4 1/64 | 4 1/2 | 5 21/32 | 1 5/16 | 1 15/16 | 2 7/32 | 3 15/32 | 1.811 | UK208D1;HE2308X |
| 1 3/8 | UKT208D1;HS2308X | | | | | | | | | | | | | | | | UK208D1;HS2308X |
| 40 | UKT209D1;H2309X | 19 | 18 | 83 | 49 | 29 | 83 | 16 | 102 | 117 | 145 | 35 | 49 | 57 | 88 | 50 | UK209D1;H2309X |
| 1 7/16 | UKT209D1;HA2309 | | | | | | | | | | | | | | | | UK209D1;HA2309 |
| 1 1/2 | UKT209D1;HE2309X | 3/4 | 23/32 | 3 9/32 | 1 15/16 | 1 5/32 | 3 9/32 | 0.630 | 4 1/64 | 4 19/32 | 5 23/32 | 1 3/8 | 1 15/16 | 2 1/4 | 3 15/32 | 1.969 | UK209D1;HE2309X |
| 1 5/8 | UKT209D1;HS2309X | | | | | | | | | | | | | | | | UK209D1;HS2309X |
| 45 | UKT210D1;H2310X | 19 | 18 | 83 | 49 | 29 | 86 | 16 | 102 | 117 | 151 | 37 | 49 | 59 | 92 | 55 | UK210D1;H2310X |
| 1 5/8 | UKT210D1;HS2310 | | | | | | | | | | | | | | | | UK210D1;HS2310 |
| 1 11/16 | UKT210D1;HA2310 | 3/4 | 23/32 | 3 9/32 | 1 15/16 | 1 5/32 | 3 3/8 | 0.630 | 4 1/64 | 4 19/32 | 5 15/16 | 1 15/32 | 1 15/16 | 2 5/16 | 3 5/8 | 2.165 | UK210D1;HA2310 |
| 1 3/4 | UKT210D1;HE2310X | | | | | | | | | | | | | | | | UK210D1;HE2310X |
| 50 | UKT211D1;H2311X | 25 | 21 | 102 | 64 | 35 | 95 | 22 | 130 | 146 | 171 | 38 | 64 | 65 | 106 | 59 | UK211D1;H2311X |
| 1 7/8 | UKT211D1;HS2311 | | | | | | | | | | | | | | | | UK211D1;HS2311 |
| 1 15/16 | UKT211D1;HA2311 | 31/32 | 13/16 | 4 1/32 | 2 17/32 | 1 3/8 | 3 3/4 | 0.866 | 5 1/8 | 5 3/4 | 6 23/32 | 1 1/2 | 2 17/32 | 2 9/16 | 4 3/16 | 2.323 | UK211D1;HA2311 |
| 2 | UKT211D1;HE2311XY | | | | | | | | | | | | | | | | UK211D1;HE2311XY |
| 55 | UKT212D1;H2312X | 32 | 21 | 102 | 64 | 35 | 102 | 22 | 130 | 146 | 194 | 42 | 64 | 75 | 119 | 62 | UK212D1;H2312X |
| 2 1/8 | UKT212D1;HS2312 | 1 1/4 | 13/16 | 4 1/32 | 2 17/32 | 1 3/8 | 4 1/32 | 0.866 | 5 1/8 | 5 3/4 | 7 5/8 | 1 21/32 | 2 17/32 | 2 15/16 | 4 11/16 | 2.441 | UK212D1;HS2312 |
| 60 | UKT213D1;H2313X | 32 | 23 | 111 | 70 | 41 | 121 | 26 | 151 | 167 | 224 | 44 | 70 | 87 | 137 | 65 | UK213D1;H2313X |
| 2 3/16 | UKT213D1;HA2313 | | | | | | | | | | | | | | | | UK213D1;HA2313 |
| 2 1/4 | UKT213D1;HE2313X | 1 1/4 | 29/32 | 4 3/8 | 2 3/4 | 1 5/8 | 4 3/4 | 1.024 | 5 15/16 | 6 9/16 | 8 13/16 | 1 23/32 | 2 3/4 | 3 7/16 | 5 13/32 | 2.559 | UK213D1;HE2313X |
| 2 3/8 | UKT213D1;HS2313X | | | | | | | | | | | | | | | | UK213D1;HS2313X |

Remarks: 1) These numbers indicate relubricatable type. If maintenance free type is needed, please order without suffix "D1".
2) Adapter number with suffix "X" means a narrow slot type adapter sleeve.
In this case the lock washer with the straight inner prong should be used.
3) For HE2311XY, screw thread pitch different from the standard is applied, because of the thin thread section of sleeve.
To distinguish it, a suffix "Y" is added.

Note: Please refer to page 36 for size of grease fitting.

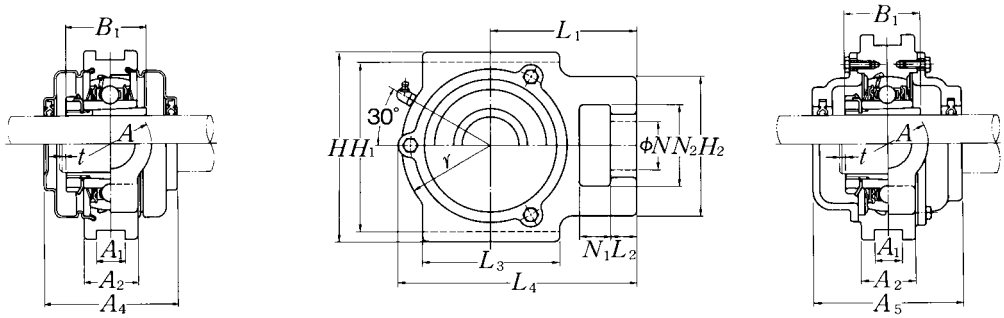


**Cast dust cover type**
Open end: **C-UKT···D1**
Closed end: **CM-UKT···D1**

| Housing[1] number | Unit number [1) 2) 3)] pressed steel dust cover type | Unit number[1) 2) 3)] cast dust cover type | Nominal dimensions mm / inch: $t$ max. | $A_4$ | $L_4$ | $A_5$ | Mass of unit kg / lb: UKT | S(SM) | C(CM) |
|---|---|---|---|---|---|---|---|---|---|
| T205D1 | S(SM)-UKT205D1;H2305X | C(CM)-UKT205D1;H2305X | 2 | 57 | 100.5 | 70 | 0.9 | 0.9 | 1.2 |
| T205D1 | S(SM)-UKT205ED1;HE2305 | C(CM)-UKT205ED1;HE2305 | 5/64 | 2 1/4 | 3 31/32 | 2 3/4 | 2.0 | 2.0 | 2.7 |
| T206D1 | S(SM)-UKT206D1;H2306X | C(CM)-UKT206D1;H2306X | 2 | 62 | 113.5 | 75 | 1.3 | 1.4 | 1.8 |
| T206D1 | S(SM)-UKT206SD1;HS2306 | C(CM)-UKT206SD1;HS2306 | 5/64 | 2 7/16 | 4 15/32 | 2 15/16 | 2.9 | 3.1 | 4.0 |
| T206D1 | S(SM)-UKT206ED1;HE2306X | C(CM)-UKT206ED1;HE2306X | | | | | | | |
| T207D1 | S(SM)-UKT207D1;H2307X | C(CM)-UKT207D1;H2307X | 3 | 72 | 129 | 80 | 1.7 | 1.8 | 2.2 |
| T207D1 | S(SM)-UKT207SD1;HS2307 | C(CM)-UKT207SD1;HS2307 | 1/8 | 2 27/32 | 5 3/32 | 3 5/32 | 3.8 | 4.0 | 4.9 |
| T208D1 | S(SM)-UKT208D1;H2308X | C(CM)-UKT208D1;H2308X | 3 | 82 | 144 | 90 | 2.5 | 2.6 | 3.3 |
| T208D1 | S(SM)-UKT208ED1;HE2308X | C(CM)-UKT208ED1;HE2308X | 1/8 | 3 7/32 | 5 21/32 | 3 17/32 | 5.5 | 5.7 | 7.3 |
| T208D1 | S(SM)-UKT208SD1;HS2308X | C(CM)-UKT208SD1;HS2308X | | | | | | | |
| T209D1 | S(SM)-UKT209D1;H2309X | C(CM)-UKT209D1;H2309X | 3 | 82 | 145.5 | 95 | 2.5 | 2.6 | 3.5 |
| T209D1 | S(SM)-UKT209AD1;HA2309 | C(CM)-UKT209AD1;HA2309 | | | | | | | |
| T209D1 | S(SM)-UKT209ED1;HE2309X | C(CM)-UKT209ED1;HE2309X | 1/8 | 3 7/32 | 5 23/32 | 3 3/4 | 5.5 | 5.7 | 7.7 |
| T209D1 | S(SM)-UKT209SD1;HS2309X | C(CM)-UKT209SD1;HS2309X | | | | | | | |
| T210D1 | S(SM)-UKT210D1;H2310X | C(CM)-UKT210D1;H2310X | 3 | 87 | 152 | 100 | 2.7 | 2.8 | 3.8 |
| T210D1 | S(SM)-UKT210SD1;HS2310 | C(CM)-UKT210SD1;HS2310 | | | | | | | |
| T210D1 | S(SM)-UKT210AD1;HA2310 | C(CM)-UKT210AD1;HA2310 | 1/8 | 3 7/16 | 5 31/32 | 3 15/16 | 6.0 | 6.2 | 8.4 |
| T210D1 | S(SM)-UKT210ED1;HE2310X | C(CM)-UKT210ED1;HE2310X | | | | | | | |
| T211D1 | S(SM)-UKT211D1;H2311X | C(CM)-UKT211D1;H2311X | 4 | 92 | 171.5 | 100 | 4.1 | 4.3 | 5.3 |
| T211D1 | S(SM)-UKT211SD1;HS2311 | C(CM)-UKT211SD1;HS2311 | | | | | | | |
| T211D1 | S(SM)-UKT211AD1;HA2311 | C(CM)-UKT211AD1;HA2311 | 5/32 | 3 5/8 | 6 3/4 | 3 15/16 | 9.0 | 9.5 | 12 |
| T211D1 | S(SM)-UKT211ED1;HE2311XY | C(CM)-UKT211ED1;HE2311XY | | | | | | | |
| T212D1 | S(SM)-UKT212D1;H2312X | C(CM)-UKT212D1;H2312X | 4 | 102 | 194 | 115 | 4.9 | 5.2 | 6.3 |
| T212D1 | S(SM)-UKT212SD1;HS2312 | C(CM)-UKT212SD1;HS2312 | 5/32 | 4 1/32 | 7 5/8 | 4 17/32 | 11 | 11 | 14 |
| T213D1 | S(SM)-UKT213D1;H2313X | C(CM)-UKT213D1;H2313X | 4 | 107 | 224 | 120 | 7.1 | 7.4 | 8.8 |
| T213D1 | S(SM)-UKT213AD1;HA2313 | C(CM)-UKT213AD1;HA2313 | | | | | | | |
| T213D1 | S(SM)-UKT213ED1;HE2313X | C(CM)-UKT213ED1;HE2313X | 5/32 | 4 7/32 | 8 13/16 | 4 23/32 | 16 | 16 | 19 |
| T213D1 | S(SM)-UKT213SD1;HS2313X | C(CM)-UKT213SD1;HS2313X | | | | | | | |

## Take-up units cast housing
## Adapter type

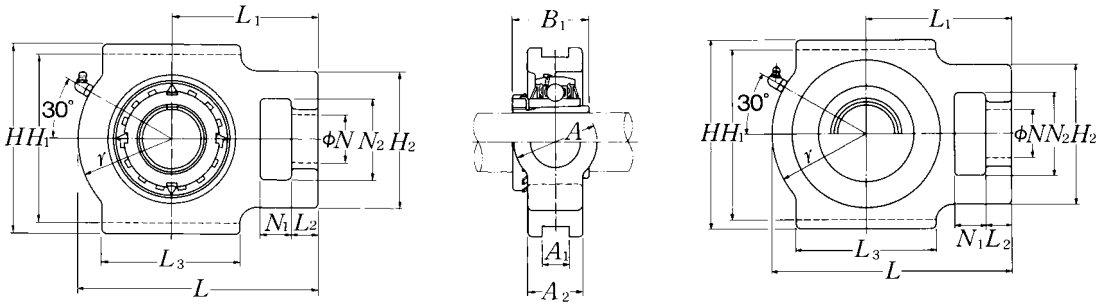


**Pressed steel dust cover type**
Open end: **S-UKT···D1**
Closed end: **SM-UKT···D1**

| Shaft dia. mm / inch | Unit number 1) 2) 3) | Nominal dimensions mm / inch | | | | | | | | | | | | | | | Bearing number 2) 3) |
|---|---|---|---|---|---|---|---|---|---|---|---|---|---|---|---|---|---|
| | | $N_1$ | $L_2$ | $H_2$ | $N_2$ | $N$ | $L_3$ | $A_1$ | $H_1$ | $H$ | $L$ | $A_2$ | $A$ | $r$ | $L_1$ | $B_1$ | |
| **65** | **UKT215D1;H2315X** | 32 | 23 | 111 | 70 | 41 | 121 | 26 | 151 | 167 | 232 | 48 | 70 | 92 | 140 | 73 | UK215D1;H2315X |
| **2 7/16** | **UKT215D1;HA2315** | 1 1/4 | 29/32 | 4 3/8 | 2 3/4 | 1 5/8 | 4 3/4 | 1.024 | 5 15/16 | 6 9/16 | 9 1/8 | 1 7/8 | 2 3/4 | 3 5/8 | 5 1/2 | 2.874 | UK215D1;HA2315 |
| **2 1/2** | **UKT215D1;HE2315X** | | | | | | | | | | | | | | | | UK215D1;HE2315X |
| **70** | **UKT216D1;H2316X** | 32 | 23 | 111 | 70 | 41 | 121 | 26 | 165 | 184 | 235 | 51 | 70 | 95 | 140 | 78 | UK216D1;H2316X |
| **2 11/16** | **UKT216D1;HA2316** | 1 1/4 | 29/32 | 4 3/8 | 2 3/4 | 1 5/8 | 4 3/4 | 1.024 | 6 1/2 | 7 1/4 | 9 1/4 | 2 | 2 3/4 | 3 3/4 | 5 1/2 | 3.071 | UK216D1;HA2316 |
| **2 3/4** | **UKT216D1;HE2316X** | | | | | | | | | | | | | | | | UK216D1;HE2316X |
| **75** | **UKT217D1;H2317X** | 38 | 31 | 124 | 73 | 48 | 157 | 30 | 173 | 198 | 260 | 54 | 73 | 98 | 162 | 82 | UK217D1;H2317X |
| **2 15/16** | **UKT217D1;HA2317X** | 1 1/2 | 1 7/32 | 4 7/8 | 2 7/8 | 1 7/8 | 6 3/16 | 1.181 | 6 13/16 | 7 25/32 | 10 1/4 | 2 1/8 | 2 7/8 | 3 27/32 | 6 3/8 | 3.228 | UK217D1;HA2317X |
| **3** | **UKT217D1;HE2317X** | | | | | | | | | | | | | | | | UK217D1;HE2317X |

Remarks: 1) These numbers indicate relubricatable type. If maintenance free type is needed, please order without suffix "D1".
2) Adapter number with suffix "X" means a narrow slot type adapter sleeve.
In this case the lock washer with the straight inner prong should be used.
3) For HE2311XY, screw thread pitch different from the standard is applied, because of the thin thread section of sleeve.
To distinguish it, a suffix "Y" is added.

Note: Please refer to page 36 for size of grease fitting.

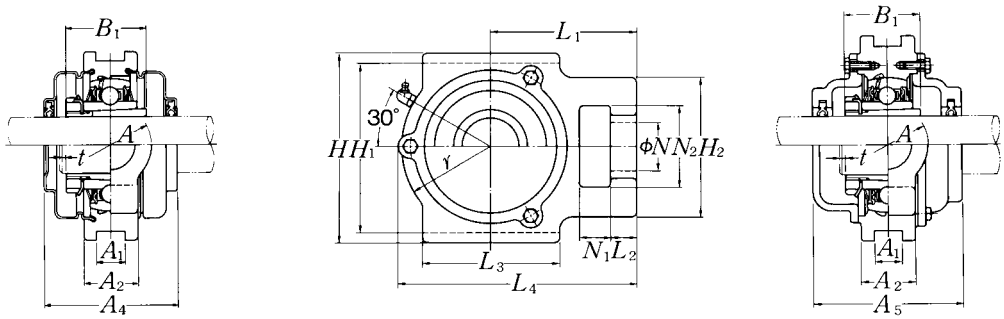


**Cast dust cover type**
Open end: **C-UKT···D1**
Closed end: **CM-UKT···D1**

| Housing[1)] number | Unit number [1) 2) 3)] pressed steel dust cover type | Unit number [1) 2) 3)] cast dust cover type | Nominal dimensions mm $t$ max. | $A_4$ | inch $L_4$ | $A_5$ | Mass of unit kg UKT | S(SM) | lb C(CM) |
|---|---|---|---|---|---|---|---|---|---|
| T215D1 | — | C(CM)-UKT215D1;H2315X | 4 | — | 232 | 135 | 7.7 | — | 10 |
| T215D1 | — | C(CM)-UKT215AD1;HA2315 | 5/32 | — | 9 1/8 | 5 5/16 | 17 | — | 22 |
| T215D1 | | C(CM)-UKT215ED1;HE2315X | | | | | | | |
| T216D1 | — | C(CM)-UKT216D1;H2316X | 4 | — | 235 | 145 | 8.7 | — | 12 |
| T216D1 | — | C(CM)-UKT216AD1;HA2316 | 5/32 | — | 9 1/4 | 5 23/32 | 19 | — | 26 |
| T216D1 | | C(CM)-UKT216ED1;HE2316X | | | | | | | |
| T217D1 | — | C(CM)-UKT217D1;H2317X | 5 | — | 260 | 155 | 11 | — | 15 |
| T217D1 | — | C(CM)-UKT217AD1;HA2317X | 13/64 | — | 10 1/4 | 6 3/32 | 24 | — | 33 |
| T217D1 | | C(CM)-UKT217ED1;HE2317X | | | | | | | |

## Take-up units cast housing
## Adapter type

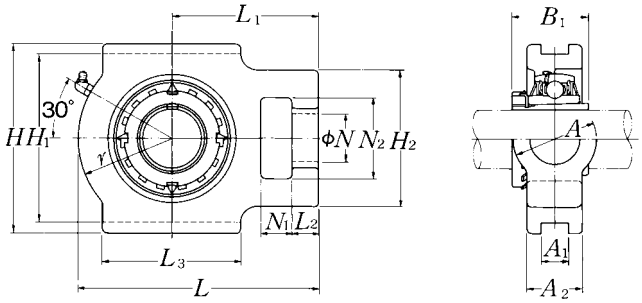


| Shaft dia. mm / inch | Unit number 1) 2) 3) | Nominal dimensions (mm / inch) | | | | | | | | | | | | | | |
|---|---|---|---|---|---|---|---|---|---|---|---|---|---|---|---|---|
| | | $N_1$ | $L_2$ | $H_2$ | $N_2$ | $N$ | $L_3$ | $A_1$ | $H_1$ | $H$ | $L$ | $A_2$ | $A$ | $r$ | $L_1$ | $B_1$ |
| 20 | UKT305D1;H2305X | 16 | 14 | 62 | 36 | 26 | 65 | 12 | 80 | 89 | 122 | 26 | 36 | 46 | 76 | 35 |
| 3/4 | UKT305D1;HE2305 | 5/8 | 9/16 | 2 7/16 | 1 13/32 | 1 1/32 | 2 9/16 | 0.472 | 3 5/32 | 3 1/2 | 4 13/16 | 1 1/32 | 1 13/32 | 1 13/16 | 3 | 1.378 |
| 25 | UKT306D1;H2306X | 18 | 16 | 70 | 41 | 28 | 74 | 16 | 90 | 100 | 137 | 28 | 41 | 52 | 85 | 38 |
| 7/8 | UKT306D1;HS2306 | 23/32 | 5/8 | 2 3/4 | 1 5/8 | 1 3/32 | 2 29/32 | 0.630 | 3 35/64 | 3 15/16 | 5 13/32 | 1 3/32 | 1 5/8 | 2 1/16 | 3 11/32 | 1.496 |
| 1 | UKT306D1;HE2306X | | | | | | | | | | | | | | | |
| 30 | UKT307D1;H2307X | 20 | 17 | 75 | 45 | 30 | 80 | 16 | 100 | 111 | 150 | 32 | 45 | 56 | 94 | 43 |
| 1 1/8 | UKT307D1;HS2307 | 25/32 | 21/32 | 2 15/16 | 1 25/32 | 1 3/16 | 3 5/32 | 0.630 | 3 15/16 | 4 3/8 | 5 29/32 | 1 1/4 | 1 25/32 | 2 7/32 | 3 11/16 | 1.693 |
| 35 | UKT308D1;H2308X | 22 | 19 | 83 | 50 | 32 | 89 | 18 | 112 | 124 | 162 | 34 | 50 | 62 | 100 | 46 |
| 1 1/4 | UKT308D1;HE2308X | 7/8 | 3/4 | 3 9/32 | 1 31/32 | 1 1/4 | 3 1/2 | 0.709 | 4 13/32 | 4 7/8 | 6 3/8 | 1 11/32 | 1 31/32 | 2 7/16 | 3 15/16 | 1.811 |
| 1 3/8 | UKT308D1;HS2308X | | | | | | | | | | | | | | | |
| 40 | UKT309D1;H2309X | 24 | 20 | 90 | 55 | 34 | 97 | 18 | 125 | 138 | 178 | 38 | 55 | 68 | 110 | 50 |
| 1 7/16 | UKT309D1;HA2309 | | | | | | | | | | | | | | | |
| 1 1/2 | UKT309D1;HE2309X | 15/16 | 25/32 | 3 17/32 | 2 5/32 | 1 11/32 | 3 13/16 | 0.709 | 4 59/64 | 5 7/16 | 7 | 1 1/2 | 2 5/32 | 2 11/16 | 4 11/32 | 1.969 |
| 1 5/8 | UKT309D1;HS2309X | | | | | | | | | | | | | | | |
| 45 | UKT310D1;H2310X | 27 | 22 | 98 | 61 | 37 | 106 | 20 | 140 | 151 | 192 | 40 | 61 | 74 | 118 | 55 |
| 1 5/8 | UKT310D1;HS2310 | | | | | | | | | | | | | | | |
| 1 11/16 | UKT310D1;HA2310 | 1 1/16 | 7/8 | 3 27/32 | 2 13/32 | 1 15/32 | 4 3/16 | 0.787 | 5 33/64 | 5 15/16 | 7 9/16 | 1 9/16 | 2 13/32 | 2 29/32 | 4 21/32 | 2.165 |
| 1 3/4 | UKT310D1;HE2310X | | | | | | | | | | | | | | | |
| 50 | UKT311D1;H2311X | 29 | 23 | 105 | 66 | 39 | 115 | 22 | 150 | 163 | 207 | 44 | 66 | 80 | 127 | 59 |
| 1 7/8 | UKT311D1;HS2311 | | | | | | | | | | | | | | | |
| 1 15/16 | UKT311D1;HA2311 | 1 5/32 | 29/32 | 4 1/8 | 2 19/32 | 1 17/32 | 4 17/32 | 0.866 | 5 29/32 | 6 13/32 | 8 5/32 | 1 23/32 | 2 19/32 | 3 5/32 | 5 | 2.323 |
| 2 | UKT311D1;HE2311XY | | | | | | | | | | | | | | | |
| 55 | UKT312D1;H2312X | 31 | 25 | 113 | 71 | 41 | 123 | 22 | 160 | 178 | 220 | 46 | 71 | 85 | 135 | 62 |
| 2 1/8 | UKT312D1;HS2312 | 1 7/32 | 31/32 | 4 7/16 | 2 25/32 | 1 5/8 | 4 27/32 | 0.866 | 6 19/64 | 7 | 8 21/32 | 1 13/16 | 2 25/32 | 3 11/32 | 5 5/16 | 2.441 |
| 60 | UKT313D1;H2313X | 32 | 27 | 116 | 70 | 43 | 134 | 26 | 170 | 190 | 238 | 50 | 80 | 92 | 146 | 65 |
| 2 3/16 | UKT313D1;HA2313 | | | | | | | | | | | | | | | |
| 2 1/4 | UKT313D1;HE2313X | 1 1/4 | 1 1/16 | 4 9/16 | 2 3/4 | 1 11/16 | 5 9/32 | 1.024 | 6 11/16 | 7 15/32 | 9 3/8 | 1 31/32 | 3 5/32 | 3 5/8 | 5 3/4 | 2.559 |
| 2 3/8 | UKT313D1;HS2313X | | | | | | | | | | | | | | | |

Remarks: 1) These numbers indicate relubricatable type. If maintenance free type is needed, please order without suffix "D1".
2) Adapter number with suffix "X" means a narrow slot type adapter sleeve.
In this case the lock washer with the straight inner prong should be used.
3) For HE2311XY, screw thread pitch different from the standard is applied, because of the thin thread section of sleeve.
To distinguish it, a suffix "Y" is added.

Note: Please refer to page 36 for size of grease fitting.

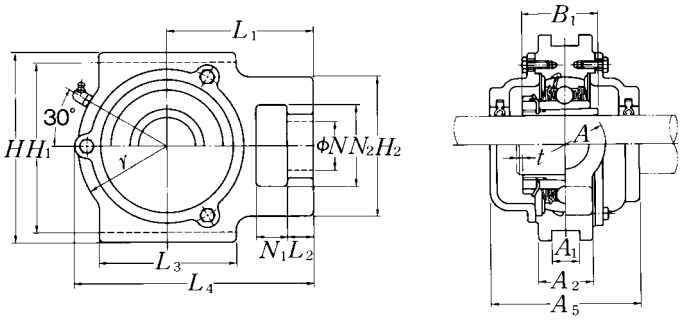


**Cast dust cover type**
Open end: **C-UKT···D1**
Closed end: **CM-UKT···D1**

| Bearing number 2) 3) | Housing 1) number | Unit number 1) 2) 3) cast dust cover type | Nominal dimensions mm | | inch | Mass of unit kg | lb |
|---|---|---|---|---|---|---|---|
| | | | $t$ max. | $L_4$ | $A_5$ | UKT | C(CM) |
| UK305D1;H2305X | T305D1 | **C(CM)-UKT305D1;H2305X** | 2 | 122 | 80 | 1.4 | 1.9 |
| UK305D1;HE2305 | T305D1 | **C(CM)-UKT305ED1;HE2305** | 5/64 | 4 13/16 | 3 5/32 | 3.1 | 4.2 |
| UK306D1;H2306X | T306D1 | **C(CM)-UKT306D1;H2306X** | 2 | 139 | 85 | 1.8 | 2.5 |
| UK306D1;HS2306 | T306D1 | **C(CM)-UKT306SD1;HS2306** | 5/64 | 5 31/32 | 3 11/32 | 4.0 | 5.5 |
| UK306D1;HE2306X | T306D1 | **C(CM)-UKT306ED1;HE2306X** | | | | | |
| UK307D1;H2307X | T307D1 | **C(CM)-UKT307D1;H2307X** | 3 | 152 | 95 | 2.4 | 3.3 |
| UK307D1;HS2307 | T307D1 | **C(CM)-UKT307SD1;HS2307** | 1/8 | 5 31/32 | 3 3/4 | 5.3 | 7.3 |
| UK308D1;H2308X | T308D1 | **C(CM)-UKT308D1;H2308X** | 3 | 164 | 105 | 3.0 | 4.3 |
| UK308D1;HE2308X | T308D1 | **C(CM)-UKT308ED1;HE2308X** | 1/8 | 6 15/32 | 4 1/8 | 6.6 | 9.5 |
| UK308D1;HS2308X | T308D1 | **C(CM)-UKT308SD1;HS2308X** | | | | | |
| UK309D1;H2309X | T309D1 | **C(CM)-UKT309D1;H2309X** | 3 | 181 | 110 | 4.0 | 5.6 |
| UK309D1;HA2309 | T309D1 | **C(CM)-UKT309AD1;HA2309** | | | | | |
| UK309D1;HE2309X | T309D1 | **C(CM)-UKT309ED1;HE2309X** | 1/8 | 7 1/8 | 4 11/32 | 8.8 | 12 |
| UK309D1;HS2309X | T309D1 | **C(CM)-UKT309SD1;HS2309X** | | | | | |
| UK310D1;H2310X | T310D1 | **C(CM)-UKT310D1;H2310X** | 3 | 197 | 120 | 5.1 | 7.1 |
| UK310D1;HS2310 | T310D1 | **C(CM)-UKT310SD1;HS2310** | | | | | |
| UK310D1;HA2310 | T310D1 | **C(CM)-UKT310AD1;HA2310** | 1/8 | 7 3/4 | 4 23/32 | 11 | 16 |
| UK310D1;HE2310X | T310D1 | **C(CM)-UKT310ED1;HE2310X** | | | | | |
| UK311D1;H2311X | T311D1 | **C(CM)-UKT311D1;H2311X** | 4 | 211 | 125 | 6.3 | 8.6 |
| UK311D1;HS2311 | T311D1 | **C(CM)-UKT311SD1;HS2311** | | | | | |
| UK311D1;HA2311 | T311D1 | **C(CM)-UKT311AD1;HA2311** | 5/32 | 8 5/16 | 4 29/32 | 14 | 19 |
| UK311D1;HE2311XY | T311D1 | **C(CM)-UKT311ED1;HE2311XY** | | | | | |
| UK312D1;H2312X | T312D1 | **C(CM)-UKT312D1;H2312X** | 4 | 227 | 135 | 7.6 | 10 |
| UK312D1;HS2312 | T312D1 | **C(CM)-UKT312SD1;HS2312** | 5/32 | 8 15/16 | 5 5/16 | 17 | 22 |
| UK313D1;H2313X | T313D1 | **C(CM)-UKT313D1;H2313X** | 4 | 244 | 140 | 9.2 | 12 |
| UK313D1;HA2313 | T313D1 | **C(CM)-UKT313AD1;HA2313** | | | | | |
| UK313D1;HE2313X | T313D1 | **C(CM)-UKT313ED1;HE2313X** | 5/32 | 9 19/32 | 5 1/2 | 20 | 26 |
| UK313D1;HS2313X | T313D1 | **C(CM)-UKT313SD1;HS2313X** | | | | | |

## Take-up units cast housing
## Adapter type

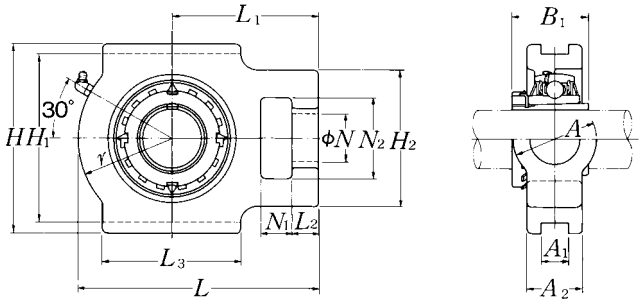


| Shaft dia. mm / inch | Unit number 1) 2) 3) | Nominal dimensions mm / inch | | | | | | | | | | | | | | |
|---|---|---|---|---|---|---|---|---|---|---|---|---|---|---|---|---|
| | | $N_1$ | $L_2$ | $H_2$ | $N_2$ | $N$ | $L_3$ | $A_1$ | $H_1$ | $H$ | $L$ | $A_2$ | $A$ | $r$ | $L_1$ | $B_1$ |
| 65 | UKT315D1;H2315X | 36 | 27 | 132 | 85 | 46 | 150 | 26 | 192 | 216 | 262 | 55 | 90 | 102 | 160 | 73 |
| 2 7/16 | UKT315D1;HA2315 | 1 13/32 | 1 1/16 | 5 3/16 | 3 11/32 | 1 13/16 | 5 29/32 | 1.024 | 7 9/16 | 8 1/2 | 10 5/16 | 2 5/32 | 3 17/32 | 4 1/32 | 6 5/16 | 2.874 |
| 2 1/2 | UKT315D1;HE2315X | | | | | | | | | | | | | | | |
| 70 | UKT316D1;H2316X | 42 | 30 | 150 | 98 | 53 | 160 | 30 | 204 | 230 | 282 | 60 | 102 | 108 | 174 | 78 |
| 2 11/16 | UKT316D1;HA2316 | 1 21/32 | 1 3/16 | 5 29/32 | 3 27/32 | 2 3/32 | 6 5/16 | 1.181 | 8 1/32 | 9 1/16 | 11 3/32 | 2 3/8 | 4 1/32 | 4 1/4 | 6 27/32 | 3.071 |
| 2 3/4 | UKT316D1;HE2316X | | | | | | | | | | | | | | | |
| 75 | UKT317D1;H2317X | 42 | 32 | 152 | 98 | 53 | 170 | 32 | 214 | 240 | 298 | 64 | 102 | 115 | 183 | 82 |
| 2 15/16 | UKT317D1;HA2317X | 1 21/32 | 1 1/4 | 5 31/32 | 3 27/32 | 2 3/32 | 6 11/16 | 1.260 | 8 27/64 | 9 7/16 | 11 23/32 | 2 17/32 | 4 1/32 | 4 17/32 | 7 7/32 | 3.228 |
| 3 | UKT317D1;HE2317X | | | | | | | | | | | | | | | |
| 80 | UKT318D1;H2318X | 46 | 32 | 160 | 106 | 57 | 175 | 32 | 228 | 255 | 312 | 66 | 110 | 120 | 192 | 86 |
| 3 3/16 | UKT318D1;HA2318X | 1 13/16 | 1 1/4 | 6 5/16 | 4 3/16 | 2 1/4 | 6 7/8 | 1.260 | 8 31/32 | 10 1/32 | 12 9/32 | 2 19/32 | 4 11/32 | 4 23/32 | 7 9/16 | 3.386 |
| 85 | UKT319D1;H2319X | 46 | 33 | 165 | 106 | 57 | 180 | 35 | 240 | 270 | 322 | 72 | 110 | 125 | 197 | 90 |
| 3 1/4 | UKT319D1;HE2319X | 1 13/16 | 1 5/16 | 6 1/2 | 4 3/16 | 2 1/4 | 7 3/32 | 1.378 | 9 29/64 | 10 5/8 | 12 11/16 | 2 27/32 | 4 11/32 | 4 29/32 | 7 3/4 | 3.543 |
| 90 | UKT320D1;H2320X | 48 | 34 | 175 | 115 | 59 | 200 | 35 | 260 | 290 | 345 | 75 | 120 | 135 | 210 | 97 |
| 3 7/16 | UKT320D1;HA2320 | 1 7/8 | 1 11/32 | 6 7/8 | 4 17/32 | 2 5/16 | 7 7/8 | 1.378 | 10 15/64 | 11 13/32 | 13 19/32 | 2 15/16 | 4 23/32 | 5 5/16 | 8 9/32 | 3.819 |
| 3 1/2 | UKT320D1;HE2320X | | | | | | | | | | | | | | | |
| 100 | UKT322D1;H2322X | 52 | 40 | 185 | 125 | 65 | 215 | 38 | 285 | 320 | 385 | 80 | 130 | 150 | 235 | 105 |
| 110 | UKT324D1;H2324X | 60 | 44 | 210 | 140 | 70 | 230 | 45 | 320 | 355 | 432 | 90 | 140 | 165 | 267 | 112 |
| 115 | UKT326D1;H2326 | 65 | 47 | 220 | 150 | 75 | 240 | 50 | 350 | 385 | 465 | 100 | 150 | 180 | 285 | 121 |
| 125 | UKT328D1;H2328 | 70 | 52 | 230 | 160 | 80 | 255 | 50 | 380 | 415 | 515 | 100 | 155 | 200 | 315 | 131 |

Remarks: 1) These numbers indicate relubricatable type. If maintenance free type is needed, please order without suffix "D1".
2) Adapter number with suffix "X" means a narrow slot type adapter sleeve.
In this case the lock washer with the straight inner prong should be used.
3) For HE2311XY, screw thread pitch different from the standard is applied, because of the thin thread section of sleeve.
To distinguish it, a suffix "Y" is added.

Note: Please refer to page 36 for size of grease fitting.

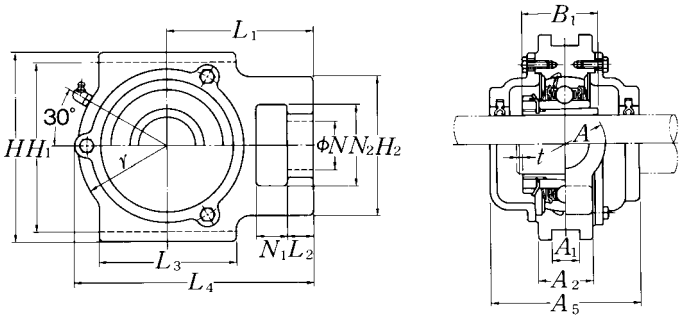


**Cast dust cover type**
Open end: **C-UKT···D1**
Closed end: **CM-UKT···D1**

| Bearing number 2) 3) | Housing 1) number | Unit number 1) 2) 3) cast dust cover type | Nominal dimensions mm / inch | | | Mass of unit kg | lb |
|---|---|---|---|---|---|---|---|
| | | | $t$ max. | $L_4$ | $A_5$ | UKT | C(CM) |
| UK315D1;H2315X | T315D1 | **C(CM)-UKT315D1;H2315X** | 4 | 268 | 150 | 13 | 17 |
| UK315D1;HA2315 | T315D1 | **C(CM)-UKT315AD1;HA2315** | 5/32 | 10 9/16 | 5 29/32 | 29 | 37 |
| UK315D1;HE2315X | T315D1 | **C(CM)-UKT315ED1;HE2315X** | | | | | |
| UK316D1;H2316X | T316D1 | **C(CM)-UKT316D1;H2316X** | 4 | 287 | 155 | 16 | 21 |
| UK316D1;HA2316 | T316D1 | **C(CM)-UKT316AD1;HA2316** | 5/32 | 11 5/16 | 6 3/32 | 35 | 46 |
| UK316D1;HE2316X | T316D1 | **C(CM)-UKT316ED1;HE2316X** | | | | | |
| UK317D1;H2317X | T317D1 | **C(CM)-UKT317D1;H2317X** | 5 | 303 | 170 | 19 | 25 |
| UK317D1;HA2317X | T317D1 | **C(CM)-UKT317AD1;HA2317X** | 13/64 | 11 15/16 | 6 11/16 | 42 | 55 |
| UK317D1;HE2317X | T317D1 | **C(CM)-UKT317ED1;HE2317X** | | | | | |
| UK318D1;H2318X | T318D1 | **C(CM)-UKT318D1;H2318X** | 5 | 317 | 170 | 21 | 28 |
| UK318D1;HA2318X | T318D1 | **C(CM)-UKT318AD1;HA2318X** | 13/64 | 12 15/32 | 6 11/16 | 46 | 62 |
| UK319D1;H2319X | T319D1 | **C(CM)-UKT319D1;H2319X** | 5 | 327 | 180 | 25 | 32 |
| UK319D1;HE2319X | T319D1 | **C(CM)-UKT319ED1;HE2319X** | 13/64 | 12 7/8 | 7 3/32 | 55 | 71 |
| UK320D1;H2320X | T320D1 | **C(CM)-UKT320D1;H2320X** | 5 | 350 | 190 | 30 | 39 |
| UK320D1;HA2320 | T320D1 | **C(CM)-UKT320AD1;HA2320** | 13/64 | 13 25/32 | 7 15/32 | 66 | 86 |
| UK320D1;HE2320X | T320D1 | **C(CM)-UKT320ED1;HE2320X** | | | | | |
| UK322D1;H2322X | T322D1 | **C(CM)-UKT322D1;H2322X** | 5 | 395 | 200 | 40 | 51 |
| UK324D1;H2324X | T324D1 | **C(CM)-UKT324D1;H2324X** | 5 | 439 | 215 | 43 | 69 |
| UK326D1;H2326 | T326D1 | **C(CM)-UKT326D1;H2326** | 6 | 476 | 225 | 69 | 85 |
| UK328D1;H2328 | T328D1 | **C(CM)-UKT328D1;H2328** | 6 | 519 | 235 | 88 | 107 |

## Take-up units cast housing
## Adapter type

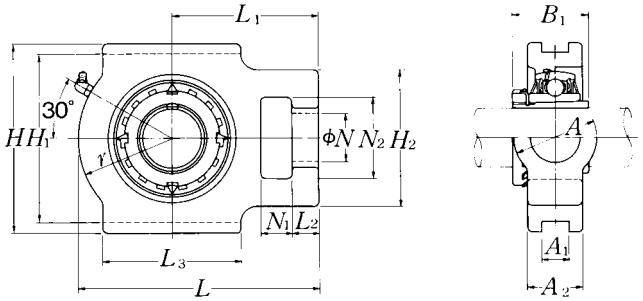


| Shaft dia. mm / inch | Unit number 1) 2) 3) | Nominal dimensions (mm / inch) $N_1$ | $L_2$ | $H_2$ | $N_2$ | $N$ | $L_3$ | $A_1$ | $H_1$ | $H$ | $L$ | $A_2$ | $A$ | $r$ | $L_1$ | $B_1$ |
|---|---|---|---|---|---|---|---|---|---|---|---|---|---|---|---|---|
| 20 | UKTX05D1;H2305X | 16 | 12 | 56 | 37 | 22 | 57 | 12 | 89 | 102 | 113 | 28 | 37 | 43 | 70 | 35 |
| 3/4 | UKTX05D1;HE2305 | 5/8 | 15/32 | 2 7/32 | 1 15/32 | 7/8 | 2 1/4 | 0.472 | 3 1/2 | 4 1/32 | 4 7/16 | 1 3/32 | 1 15/32 | 1 11/16 | 2 3/4 | 1.378 |
| 25 | UKTX06D1;H2306X | 16 | 15 | 64 | 37 | 22 | 64 | 12 | 89 | 102 | 129 | 30 | 37 | 51 | 78 | 38 |
| 7/8 | UKTX06D1;HS2306 | 5/8 | 19/32 | 2 17/32 | 1 15/32 | 7/8 | 2 17/32 | 0.472 | 3 1/2 | 4 1/32 | 5 3/32 | 1 3/16 | 1 15/32 | 2 | 3 1/16 | 1.496 |
| 1 | UKTX06D1;HE2306X | | | | | | | | | | | | | | | |
| 30 | UKTX07D1;H2307X | 19 | 17 | 83 | 49 | 29 | 83 | 16 | 102 | 114 | 144 | 36 | 49 | 56 | 88 | 43 |
| 1 1/8 | UKTX07D1;HS2307 | 3/4 | 21/32 | 3 9/32 | 1 15/16 | 1 5/32 | 3 9/32 | 0.630 | 4 1/64 | 4 1/2 | 5 21/32 | 1 13/32 | 1 15/16 | 2 7/32 | 3 15/32 | 1.693 |
| 35 | UKTX08D1;H2308X | 19 | 17 | 83 | 49 | 29 | 83 | 16 | 102 | 117 | 144 | 36 | 49 | 57 | 87 | 46 |
| 1 1/4 | UKTX08D1;HE2308X | 3/4 | 21/32 | 3 9/32 | 1 15/16 | 1 5/32 | 3 9/32 | 0.630 | 4 1/64 | 4 19/32 | 5 21/32 | 1 13/32 | 1 15/16 | 2 1/4 | 3 7/16 | 1.811 |
| 1 3/8 | UKTX08D1;HS2308X | | | | | | | | | | | | | | | |
| 40 | UKTX09D1;H2309X | 19 | 18 | 83 | 49 | 29 | 86 | 16 | 102 | 117 | 151 | 38 | 49 | 59 | 92 | 50 |
| 1 7/16 | UKTX09D1;HA2309 | | | | | | | | | | | | | | | |
| 1 1/2 | UKTX09D1;HE2309X | 3/4 | 23/32 | 3 9/32 | 1 15/16 | 1 5/32 | 3 3/8 | 0.630 | 4 1/64 | 4 19/32 | 5 15/16 | 1 1/2 | 1 15/16 | 2 5/16 | 3 5/8 | 1.969 |
| 1 5/8 | UKTX09D1;HS2309X | | | | | | | | | | | | | | | |
| 45 | UKTX10D1;H2310X | 25 | 21 | 102 | 64 | 35 | 95 | 22 | 130 | 146 | 171 | 42 | 64 | 65 | 106 | 55 |
| 1 5/8 | UKTX10D1;HS2310 | | | | | | | | | | | | | | | |
| 1 11/16 | UKTX10D1;HA2310 | 31/32 | 13/16 | 4 1/32 | 2 17/32 | 1 3/8 | 3 3/4 | 0.866 | 5 1/8 | 5 3/4 | 6 23/32 | 1 21/32 | 2 17/32 | 2 9/16 | 4 3/16 | 2.165 |
| 1 3/4 | UKTX10D1;HE2310X | | | | | | | | | | | | | | | |
| 50 | UKTX11D1;H2311X | 32 | 21 | 102 | 64 | 35 | 102 | 22 | 130 | 146 | 194 | 44 | 64 | 75 | 119 | 59 |
| 1 7/8 | UKTX11D1;HS2311 | | | | | | | | | | | | | | | |
| 1 15/16 | UKTX11D1;HA2311 | 1 1/4 | 13/16 | 4 1/32 | 2 17/32 | 1 3/8 | 4 1/32 | 0.866 | 5 1/8 | 5 3/4 | 7 5/8 | 1 23/32 | 2 17/32 | 2 15/16 | 4 11/16 | 2.323 |
| 2 | UKTX11D1;HE2311XY | | | | | | | | | | | | | | | |
| 55 | UKTX12D1;H2312X | 32 | 23 | 111 | 70 | 41 | 121 | 26 | 151 | 167 | 224 | 48 | 70 | 87 | 137 | 62 |
| 2 1/8 | UKTX12D1;HS2312 | 1 1/4 | 29/32 | 4 3/8 | 2 3/4 | 1 5/8 | 4 3/4 | 1.024 | 5 15/16 | 6 9/16 | 8 13/16 | 1 7/8 | 2 3/4 | 3 7/16 | 5 13/32 | 2.441 |
| 60 | UKTX13D1;H2313X | 32 | 23 | 111 | 70 | 41 | 121 | 26 | 151 | 167 | 224 | 48 | 70 | 87 | 137 | 65 |
| 2 3/16 | UKTX13D1;HA2313 | | | | | | | | | | | | | | | |
| 2 1/4 | UKTX13D1;HE2313X | 1 1/4 | 29/32 | 4 3/8 | 2 3/4 | 1 5/8 | 4 3/4 | 1.024 | 5 15/16 | 6 9/16 | 8 13/16 | 1 7/8 | 2 3/4 | 3 7/16 | 5 13/32 | 2.559 |
| 2 3/8 | UKTX13D1;HS2313X | | | | | | | | | | | | | | | |

Remarks: 1) These numbers indicate relubricatable type. If maintenance free type is needed, please order without suffix "D1".
2) Adapter number with suffix "X" means a narrow slot type adapter sleeve.
In this case the lock washer with the straight inner prong should be used.
3) For HE2311XY, screw thread pitch different from the standard is applied, because of the thin thread section of sleeve.
To distinguish it, a suffix "Y" is added.

Note: Please refer to page 36 for size of grease fitting.

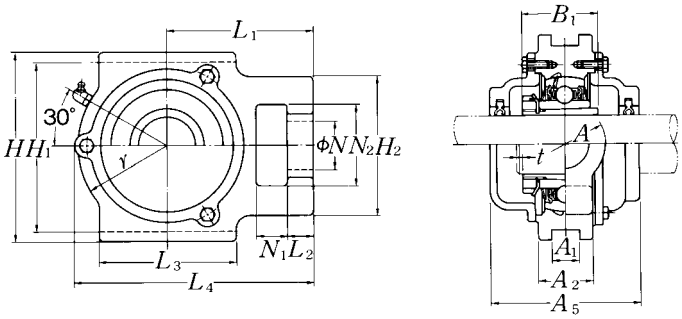


**Cast dust cover type**
Open end: **C-UKTX…D1**
Closed end: **CM-UKTX…D1**

| Bearing number 2) 3) | Housing 1) number | Unit number 1) 2) 3) cast dust cover type | Nominal dimensions mm | | inch | Mass of unit kg | lb |
|---|---|---|---|---|---|---|---|
| | | | $t$ | $L_4$ | $A_5$ | UKTX | C(CM) |
| UKX05D1;H2305X | TX05D1 | C(CM)-UKTX05D1;H2305X | 2 | 113.5 | 75 | 1.3 | 1.8 |
| UKX05D1;HE2305 | TX05D1 | C(CM)-UKTX05ED1;HE2305 | 5/64 | 4 15/32 | 2 15/16 | 2.9 | 4.0 |
| UKX06D1;H2306X | TX06D1 | C(CM)-UKTX06D1;H2306X | 2 | 129 | 80 | 1.7 | 2.2 |
| UKX06D1;HS2306 | TX06D1 | C(CM)-UKTX06SD1;HS2306 | 5/64 | 5 3/32 | 3 5/32 | 3.8 | 4.9 |
| UKX06D1;HE2306X | TX06D1 | C(CM)-UKTX06ED1;HE2306X | | | | | |
| UKX07D1;H2307X | TX07D1 | C(CM)-UKTX07D1;H2307X | 3 | 144 | 90 | 2.7 | 3.5 |
| UKX07D1;HS2307 | TX07D1 | C(CM)-UKTX07SD1;HS2307 | 1/8 | 5 21/32 | 3 17/32 | 6.0 | 7.7 |
| UKX08D1;H2308X | TX08D1 | C(CM)-UKTX08D1;H2308X | 3 | 144.5 | 95 | 2.8 | 3.7 |
| UKX08D1;HE2308X | TX08D1 | C(CM)-UKTX08ED1;HE2308X | 1/8 | 5 11/16 | 3 3/4 | 6.2 | 8.2 |
| UKX08D1;HS2308X | TX08D1 | C(CM)-UKTX08SD1;HS2308X | | | | | |
| UKX09D1;H2309X | TX09D1 | C(CM)-UKTX09D1;H2309X | 3 | 152 | 100 | 2.7 | 3.8 |
| UKX09D1;HA2309 | TX09D1 | C(CM)-UKTX09AD1;HA2309 | | | | | |
| UKX09D1;HE2309X | TX09D1 | C(CM)-UKTX09ED1;HE2309X | 1/8 | 5 31/32 | 3 15/16 | 6.0 | 8.4 |
| UKX09D1;HS2309X | TX09D1 | C(CM)-UKTX09SD1;HS2309X | | | | | |
| UKX10D1;H2310X | TX10D1 | C(CM)-UKTX10D1;H2310X | 3 | 171.5 | 100 | 4.3 | 5.5 |
| UKX10D1;HS2310 | TX10D1 | C(CM)-UKTX10SD1;HS2310 | | | | | |
| UKX10D1;HA2310 | TX10D1 | C(CM)-UKTX10AD1;HA2310 | 1/8 | 6 3/4 | 3 15/16 | 9.5 | 12 |
| UKX10D1;HE2310X | TX10D1 | C(CM)-UKTX10ED1;HE2310X | | | | | |
| UKX11D1;H2311X | TX11D1 | C(CM)-UKTX11D1;H2311X | 4 | 194 | 115 | 5.1 | 6.6 |
| UKX11D1;HS2311 | TX11D1 | C(CM)-UKTX11SD1;HS2311 | | | | | |
| UKX11D1;HA2311 | TX11D1 | C(CM)-UKTX11AD1;HA2311 | 5/32 | 7 5/8 | 4 17/32 | 11 | 15 |
| UKX11D1;HE2311XY | TX11D1 | C(CM)-UKTX11ED1;HE2311XY | | | | | |
| UKX12D1;H2312X | TX12D1 | C(CM)-UKTX12D1;H2312X | 4 | 224 | 120 | 7.2 | 9.0 |
| UKX12D1;HS2312 | TX12D1 | C(CM)-UKTX12SD1;HS2312 | 5/32 | 8 13/16 | 4 23/32 | 16 | 20 |
| UKX13D1;H2313X | TX13D1 | C(CM)-UKTX13D1;H2313X | 4 | 224 | 135 | 7.2 | 9.5 |
| UKX13D1;HA2313 | TX13D1 | C(CM)-UKTX13AD1;HA2313 | | | | | |
| UKX13D1;HE2313X | TX13D1 | C(CM)-UKTX13ED1;HE2313X | 5/32 | 8 13/16 | 5 5/16 | 16 | 21 |
| UKX13D1;HS2313X | TX13D1 | C(CM)-UKTX13SD1;HS2313X | | | | | |

## Take-up units cast housing
## Adapter type

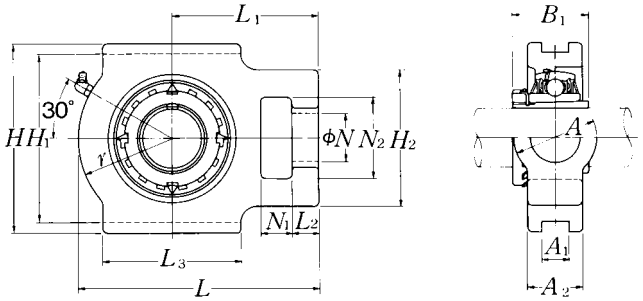


| Shaft dia. mm / inch | Unit number 1) 2) 3) | Nominal dimensions (mm / inch) $N_1$ | $L_2$ | $H_2$ | $N_2$ | $N$ | $L_3$ | $A_1$ | $H_1$ | $H$ | $L$ | $A_2$ | $A$ | $r$ | $L_1$ | $B_1$ |
|---|---|---|---|---|---|---|---|---|---|---|---|---|---|---|---|---|
| 65 | UKTX15D1;H2315X | 32 | 23 | 111 | 70 | 41 | 121 | 28 | 165 | 184 | 235 | 48 | 70 | 95 | 140 | 73 |
| 2 7/16 | UKTX15D1;HA2315 | 1 1/4 | 29/32 | 4 3/8 | 2 3/4 | 1 5/8 | 4 3/4 | 1.102 | 6 1/2 | 7 1/4 | 9 1/4 | 1 7/8 | 2 3/4 | 3 3/4 | 5 1/2 | 2.874 |
| 2 1/2 | UKTX15D1;HE2315X | | | | | | | | | | | | | | | |
| 70 | UKTX16D1;H2316X | 38 | 30 | 124 | 73 | 48 | 157 | 28 | 173 | 198 | 260 | 54 | 73 | 98 | 162 | 78 |
| 2 11/16 | UKTX16D1;HA2316 | 1 1/2 | 1 3/16 | 4 7/8 | 2 7/8 | 1 7/8 | 6 3/16 | 1.102 | 6 13/16 | 7 25/32 | 10 1/4 | 2 1/8 | 2 7/8 | 3 27/32 | 6 3/8 | 3.071 |
| 2 3/4 | UKTX16D1;HE2316X | | | | | | | | | | | | | | | |
| 75 | UKTX17D1;H2317X | 38 | 30 | 124 | 73 | 48 | 157 | 28 | 173 | 198 | 260 | 54 | 73 | 98 | 162 | 82 |
| 2 15/16 | UKTX17D1;HA2317X | 1 1/2 | 1 3/16 | 4 7/8 | 2 7/8 | 1 7/8 | 6 3/16 | 1.102 | 6 13/16 | 7 25/32 | 10 1/4 | 2 1/8 | 2 7/8 | 3 27/32 | 6 3/8 | 3.228 |
| 3 | UKTX17D1;HE2317X | | | | | | | | | | | | | | | |

Remarks: 1) These numbers indicate relubricatable type. If maintenance free type is needed, please order without suffix "D1".
2) Adapter number with suffix "X" means a narrow slot type adapter sleeve.
In this case the lock washer with the straight inner prong should be used.
3) For HE2311XY, screw thread pitch different from the standard is applied, because of the thin thread section of sleeve.
To distinguish it, a suffix "Y" is added.

Note: Please refer to page 36 for size of grease fitting.

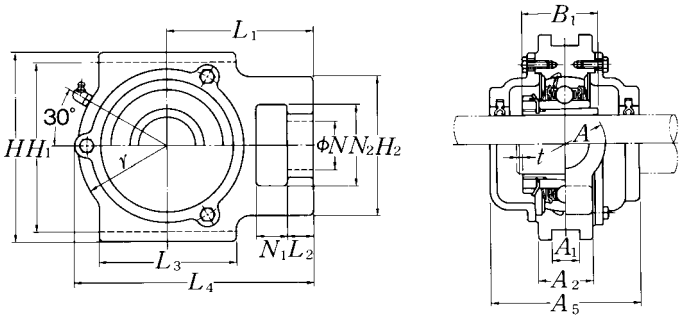


**Cast dust cover type**
Open end: **C-UKTX···D1**
Closed end: **CM-UKTX···D1**

| Bearing number 2) 3) | Housing 1) number | Unit number 1) 2) 3) cast dust cover type | Nominal dimensions mm | | inch | Mass of unit kg | lb |
|---|---|---|---|---|---|---|---|
| | | | $t$ | $L_4$ | $A_5$ | UKTX | C(CM) |
| UKX15D1;H2315X | TX15D1 | **C(CM)-UKTX15D1;H2315X** | 4 | 235 | 145 | 8.5 | 11 |
| UKX15D1;HA2315 | TX15D1 | **C(CM)-UKTX15AD1;HA2315** | 5/32 | 9 1/4 | 5 23/32 | 19 | 24 |
| UKX15D1;HE2315X | TX15D1 | **C(CM)-UKTX15ED1;HE2315X** | | | | | |
| UKX16D1;H2316X | TX16D1 | **C(CM)-UKTX16D1;H2316X** | 4 | 260 | 155 | 11 | 14 |
| UKX16D1;HA2316 | TX16D1 | **C(CM)-UKTX16AD1;HA2316** | 5/32 | 10 1/4 | 6 3/32 | 24 | 31 |
| UKX16D1;HE2316X | TX16D1 | **C(CM)-UKTX16ED1;HE2316X** | | | | | |
| UKX17D1;H2317X | TX17D1 | **C(CM)-UKTX17D1;H2317X** | 5 | 262 | 165 | 11 | 15 |
| UKX17D1;HA2317X | TX17D1 | **C(CM)-UKTX17AD1;HA2317X** | 13/64 | 10 5/16 | 6 1/2 | 24 | 33 |
| UKX17D1;HE2317X | TX17D1 | **C(CM)-UKTX17ED1;HE2317X** | | | | | |

## Cartridge units cast housing
## Adapter type

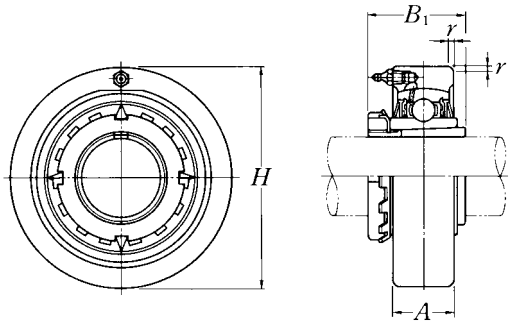


| Shaft dia. mm / inch | Unit number 1) 2) 3) | Nominal dimensions H (mm / inch) | A (mm / inch) | r (mm / inch) | B1 (mm / inch) | Bearing number 2) 3) | Housing 1) number | Mass of unit kg / lb |
|---|---|---|---|---|---|---|---|---|
| 20 | UKC205D1;H2305X | 80 | 22 | 2 | 35 | UK205D1;H2305X | C205D1 | 0.7 |
| 3/4 | UKC205D1;HE2305 | 3.1496 | 55/64 | 0.079 | 1.378 | UK205D1;HE2305 | C205D1 | 1.5 |
| 25 | UKC206D1;H2306X | 85 | 27 | 2 | 38 | UK206D1;H2306X | C206D1 | 0.9 |
| 7/8 | UKC206D1;HS2306 | 3.3465 | 1 1/16 | 0.079 | 1.496 | UK206D1;HS2306 | C206D1 | 2.0 |
| 1 | UKC206D1;HE2306X | | | | | UK206D1;HE2306X | C206D1 | |
| 30 | UKC207D1;H2307X | 90 | 28 | 2 | 43 | UK207D1;H2307X | C207D1 | 1.0 |
| 1 1/8 | UKC207D1;HS2307 | 3.5433 | 1 7/64 | 0.079 | 1.693 | UK207D1;HS2307 | C207D1 | 2.2 |
| 35 | UKC208D1;H2308X | 100 | 30 | 2.5 | 46 | UK208D1;H2308X | C208D1 | 1.3 |
| 1 1/4 | UKC208D1;HE2308X | 3.9370 | 1 3/16 | 0.098 | 1.811 | UK208D1;HE2308X | C208D1 | 2.9 |
| 1 3/8 | UKC208D1;HS2308X | | | | | UKC208D1;HS2308X | C208D1 | |
| 40 | UKC209D1;H2309X | 110 | 31 | 2.5 | 50 | UK209D1;H2309X | C209D1 | 1.6 |
| 1 7/16 | UKC209D1;HA2309 | | | | | UK209D1;HA2309 | C209D1 | |
| 1 1/2 | UKC209D1;HE2309X | 4.3307 | 1 7/32 | 0.098 | 1.969 | UK209D1;HE2309X | C209D1 | 3.5 |
| 1 5/8 | UKC209D1;HS2309X | | | | | UK209D1;HS2309X | C209D1 | |
| 45 | UKC210D1;H2310X | 120 | 33 | 2.5 | 55 | UK210D1;H2310X | C210D1 | 2.1 |
| 1 5/8 | UKC210D1;HS2310 | | | | | UK210D1;HS2310 | C210D1 | |
| 1 11/16 | UKC210D1;HA2310 | 4.7244 | 1 19/64 | 0.098 | 2.165 | UK210D1;HA2310 | C210D1 | 4.6 |
| 1 3/4 | UKC210D1;HE2310X | | | | | UK210D1;HE2310X | C210D1 | |
| 50 | UKC211D1;H2311X | 125 | 35 | 2.5 | 59 | UK211D1;H2311X | C211D1 | 2.3 |
| 1 7/8 | UKC211D1;HS2311 | | | | | UK211D1;HS2311 | C211D1 | |
| 1 15/16 | UKC211D1;HA2311 | 4.9213 | 1 3/8 | 0.098 | 2.323 | UK211D1;HA2311 | C211D1 | 5.1 |
| 2 | UKC211D1;HE2311XY | | | | | UK211D1;HE2311XY | C211D1 | |
| 55 | UKC212D1;H2312X | 130 | 38 | 2.5 | 62 | UK212D1;H2312X | C212D1 | 2.6 |
| 2 1/8 | UKC212D1;HS2312 | 5.1181 | 1 1/2 | 0.098 | 2.441 | UK212D1;HS2312 | C212D1 | 5.7 |
| 60 | UKC213D1;H2313X | 140 | 40 | 3 | 65 | UK213D1;H2313X | C213D1 | 3.2 |
| 2 3/16 | UKC213D1;HA2313 | | | | | UK213D1;HA2313 | C213D1 | |
| 2 1/4 | UKC213D1;HE2313X | 5.5118 | 1 37/64 | 0.118 | 2.559 | UK213D1;HE2313X | C213D1 | 7.1 |
| 2 3/8 | UKC213D1;HS2313X | | | | | UK213D1;HS2313X | C213D1 | |

Remarks: 1) These numbers indicate relubricatable type. If maintenance free type is needed, please order without suffix "D1".
2) Adapter number with suffix "X" means a narrow slot type adapter sleeve.
In this case the lock washer with the straight inner prong should be used.
3) For HE2311XY, screw thread pitch different from the standard is applied, because of the thin thread section of sleeve.
To distinguish it, a suffix "Y" is added.

Note: Please refer to page 36 for size of grease fitting.

## Cartridge units cast housing
## Adapter type

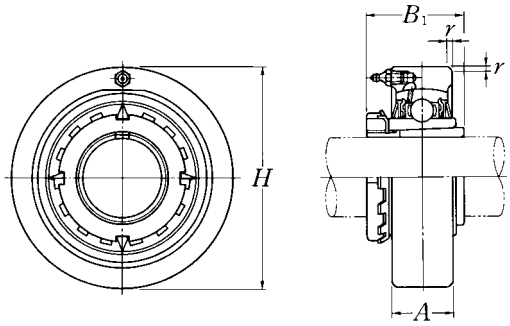


| Shaft dia. mm / inch | Unit number 1) 2) 3) | Nominal dimensions H (mm / inch) | A (mm / inch) | r (mm / inch) | B1 (mm / inch) | Bearing number 2) 3) | Housing 1) number | Mass of unit kg / lb |
|---|---|---|---|---|---|---|---|---|
| 20 | UKC305D1;H2305X | 90 | 26 | 2.5 | 35 | UK305D1;H2305X | C305D1 | 1.0 |
| 3/4 | UKC305D1;HE2305 | 3.5433 | 1 1/32 | 0.098 | 1.378 | UK305D1;HE2305 | C305D1 | 2.2 |
| 25 | UKC306D1;H2306X | 100 | 28 | 2.5 | 38 | UK306D1;H2306X | C306D1 | 1.3 |
| 7/8 | UKC306D1;HS2306 | 3.9370 | 1 7/64 | 0.098 | 1.496 | UK306D1;HS2306 | C306D1 | 2.9 |
| 1 | UKC306D1;HE2306X | | | | | UK306D1;HE2306X | C306D1 | |
| 30 | UKC307D1;H2307X | 110 | 32 | 3 | 43 | UK307D1;H2307X | C307D1 | 1.8 |
| 1 1/8 | UKC307D1;HS2307 | 4.3307 | 1 17/64 | 0.118 | 1.693 | UK307D1;HS2307 | C307D1 | 4.0 |
| 35 | UKC308D1;H2308X | 120 | 34 | 3 | 46 | UK308D1;H2308X | C308D1 | 2.2 |
| 1 1/4 | UKC308D1;HE2308X | 4.7244 | 1 11/32 | 0.118 | 1.811 | UK308D1;HE2308X | C308D1 | 4.9 |
| 1 3/8 | UKC308D1;HS2308X | | | | | UK308D1;HS2308X | C308D1 | |
| 40 | UKC309D1;H2309X | 130 | 38 | 3.5 | 50 | UK309D1;H2309X | C309D1 | 2.7 |
| 1 7/16 | UKC309D1;HA2309 | | | | | UK309D1;HA2309 | C309D1 | |
| 1 1/2 | UKC309D1;HE2309X | 5.1181 | 1 1/2 | 0.138 | 1.969 | UK309D1;HE2309X | C309D1 | 6.0 |
| 1 5/8 | UKC309D1;HS2309X | | | | | UK309D1;HS2309X | C309D1 | |
| 45 | UKC310D1;H2310X | 140 | 40 | 3.5 | 55 | UK310D1;H2310X | C310D1 | 3.4 |
| 1 5/8 | UKC310D1;HS2310 | | | | | UK310D1;HS2310 | C310D1 | |
| 1 11/16 | UKC310D1;HA2310 | 5.5118 | 1 37/64 | 0.138 | 2.165 | UK310D1;HA2310 | C310D1 | 7.5 |
| 1 3/4 | UKC310D1;HE2310X | | | | | UK310D1;HE2310X | C310D1 | |
| 50 | UKC311D1;H2311X | 150 | 44 | 3.5 | 59 | UK311D1;H2311X | C311D1 | 4.0 |
| 1 7/8 | UKC311D1;HS2311 | | | | | UK311D1;HS2311 | C311D1 | |
| 1 15/16 | UKC311D1;HA2311 | 5.9055 | 1 47/64 | 0.138 | 2.323 | UK311D1;HA2311 | C311D1 | 8.8 |
| 2 | UKC311D1;HE2311XY | | | | | UK311D1;HE2311XY | C311D1 | |
| 55 | UKC312D1;H2312X | 160 | 46 | 3.5 | 62 | UK312D1;H2312X | C312D1 | 4.8 |
| 2 1/8 | UKC312D1;HS2312 | 6.2992 | 1 13/16 | 0.138 | 2.441 | UK312D1;HS2312 | C312D1 | 11 |
| 60 | UKC313D1;H2313X | 170 | 50 | 3.5 | 65 | UK313D1;H2313X | C313D1 | 5.6 |
| 2 3/16 | UKC313D1;HA2313 | | | | | UK313D1;HA2313 | C313D1 | |
| 2 1/4 | UKC313D1;HE2313X | 6.6929 | 1 31/32 | 0.138 | 2.559 | UK313D1;HE2313X | C313D1 | 12 |
| 2 3/8 | UKC313D1;HS2313X | | | | | UK313D1;HS2313X | C313D1 | |

Remarks: 1) These numbers indicate relubricatable type. If maintenance free type is needed, please order without suffix "D1".
2) Adapter number with suffix "X" means a narrow slot type adapter sleeve.
In this case the lock washer with the straight inner prong should be used.
3) For HE2311XY, screw thread pitch different from the standard is applied, because of the thin thread section of sleeve.
To distinguish it, a suffix "Y" is added.

Note: Please refer to page 36 for size of grease fitting.

## Cartridge units cast housing
## Adapter type

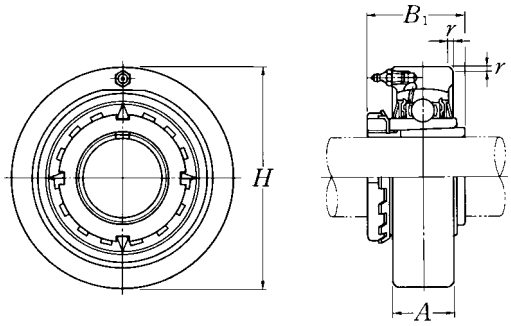


| Shaft dia. mm / inch | Unit number 1) 2) 3) | Nominal dimensions H | A (mm) | r (inch) | B1 | Bearing number 2) 3) | Housing 1) number | Mass of unit kg / lb |
|---|---|---|---|---|---|---|---|---|
| 65 | UKC315D1;H2315X | 190 | 55 | 4 | 73 | UK315D1;H2315X | C315D1 | 7.9 |
| 2 7/16 | UKC315D1;HA2315 | 7.4803 | 2 11/16 | 0.157 | 2.874 | UK315D1;HA2315 | C315D1 | 17 |
| 2 1/2 | UKC315D1;HE2315X | | | | | UK315D1;HE2315X | C315D1 | |
| 70 | UKC316D1;H2316X | 200 | 60 | 4 | 78 | UK316D1;H2316X | C316D1 | 9.4 |
| 2 11/16 | UKC316D1;HA2316 | 7.8740 | 2 23/64 | 0.157 | 3.071 | UK316D1;HA2316 | C316D1 | 20 |
| 2 3/4 | UKC316D1;HE2316X | | | | | UK316D1;HE2316X | C316D1 | |
| 75 | UKC317D1;H2317X | 215 | 64 | 4 | 82 | UK317D1;H2317X | C317D1 | 11 |
| 2 15/16 | UKC317D1;HA2317X | 8.4646 | 2 33/64 | 0.157 | 3.228 | UK317D1;HA2317X | C317D1 | 24 |
| 3 | UKC317D1;HE2317X | | | | | UK317D1;HE2317X | C317D1 | |
| 80 | UKC318D1;H2318X | 225 | 66 | 4 | 86 | UK318D1;H2318X | C318D1 | 13 |
| 3 3/16 | UKC318D1;HA2318X | 8.8583 | 2 19/32 | 0.157 | 3.386 | UK318D1;HA2318X | C318D1 | 29 |
| 85 | UKC319D1;H2319X | 240 | 72 | 4 | 90 | UK319D1;H2319X | C319D1 | 16 |
| 3 1/4 | UKC319D1;HE2319X | 9.4488 | 2 53/64 | 0.157 | 3.543 | UK319D1;HE2319X | C319D1 | 35 |
| 90 | UKC320D1;H2320X | 260 | 75 | 4 | 97 | UK320D1;H2320X | C320D1 | 20 |
| 3 7/16 | UKC320D1;HA2320 | 10.2362 | 2 61/64 | 0.157 | 3.819 | UK320D1;HA2320 | C320D1 | 44 |
| 3 1/2 | UKC320D1;HE2320X | | | | | UK320D1;HE2320X | C320D1 | |
| 100 | UKC322D1;H2322X | 300 | 80 | 5 | 105 | UK322D1;H2322X | C322D1 | 29 |
| 110 | UKC324D1;H2324X | 320 | 90 | 5 | 112 | UK324D1;H2324X | C324D1 | 35 |
| 115 | UKC326D1;H2326 | 340 | 100 | 5 | 121 | UK326D1;H2326 | C326D1 | 43 |
| 125 | UKC328D1;H2328 | 360 | 100 | 5 | 131 | UK328D1;H2328 | C328D1 | 50 |

Remarks: 1) These numbers indicate relubricatable type. If maintenance free type is needed, please order without suffix "D1".
2) Adapter number with suffix "X" means a narrow slot type adapter sleeve.
In this case the lock washer with the straight inner prong should be used.
3) For HE2311XY, screw thread pitch different from the standard is applied, because of the thin thread section of sleeve.
To distinguish it, a suffix "Y" is added.

Note: Please refer to page 36 for size of grease fitting.

## Cartridge units cast housing
## Adapter type

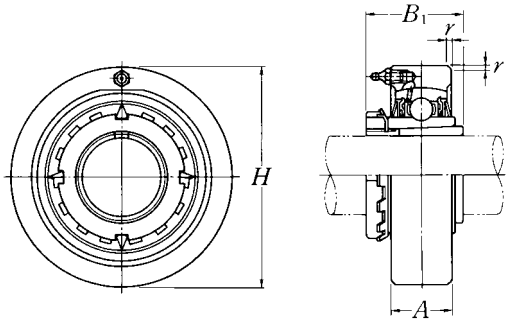


| Shaft dia. mm / inch | Unit number 1) 2) 3) | Nominal dimensions H | A (mm) | r (inch) | $B_1$ | Bearing number 2) 3) | Housing 1) number | Mass of unit kg / lb |
|---|---|---|---|---|---|---|---|---|
| 20 | UKCX05D1;H2305X | 90 | 27 | 2 | 35 | UKX05D1;H2305X | CX05D1 | 1.1 |
| 3/4 | UKCX05D1;HE2305 | 3.5433 | 1 1/16 | 0.079 | 1.378 | UKX05D1;HE2305 | CX05D1 | 2.4 |
| 25 | UKCX06D1;H2306X | 100 | 30 | 2.5 | 38 | UKX06D1;H2306X | CX06D1 | 1.4 |
| 7/8 | UKCX06D1;HS2306 | 3.9370 | 1 3/16 | 0.098 | 1.496 | UKX06D1;HS2306 | CX06D1 | 3.1 |
| 1 | UKCX06D1;HE2306X | | | | | UKX06D1;HE2306X | CX06D1 | |
| 30 | UKCX07D1;H2307X | 110 | 34 | 2.5 | 43 | UKX07D1;H2307X | CX07D1 | 1.8 |
| 1 1/8 | UKCX07D1;HS2307 | 4.3307 | 1 11/32 | 0.098 | 1.693 | UKX07D1;HS2307 | CX07D1 | 4.0 |
| 35 | UKCX08D1;H2308X | 120 | 38 | 2.5 | 46 | UKX08D1;H2308X | CX08D1 | 2.5 |
| 1 1/4 | UKCX08D1;HE2308X | 4.7244 | 1 1/2 | 0.098 | 1.811 | UKX08D1;HE2308X | CX08D1 | 5.5 |
| 1 3/8 | UKCX08D1;HS2308X | | | | | UKX08D1;HS2308X | CX08D1 | |
| 40 | UKCX09D1;H2309X | 120 | 38 | 2.5 | 50 | UKX09D1;H2309X | CX09D1 | 2.2 |
| 1 7/16 | UKCX09D1;HA2309 | | | | | UKX09D1;HA2309 | CX09D1 | |
| 1 1/2 | UKCX09D1;HE2309X | 4.7244 | 1 1/2 | 0.098 | 1.969 | UKX09D1;HE2309X | CX09D1 | 4.9 |
| 1 5/8 | UKCX09D1;HS2309X | | | | | UKX09D1;HS2309X | CX09D1 | |
| 45 | UKCX10D1;H2310X | 130 | 40 | 2.5 | 55 | UKX10D1;H2310X | CX10D1 | 2.7 |
| 1 5/8 | UKCX10D1;HS2310 | | | | | UKX10D1;HS2310 | CX10D1 | |
| 1 11/16 | UKCX10D1;HA2310 | 5.1181 | 1 37/64 | 0.098 | 2.165 | UKX10D1;HA2310 | CX10D1 | 6.0 |
| 1 3/4 | UKCX10D1;HE2310X | | | | | UKX10D1;HE2310X | CX10D1 | |
| 50 | UKCX11D1;H2311X | 150 | 42 | 3 | 59 | UKX11D1;H2311X | CX11D1 | 4.0 |
| 1 7/8 | UKCX11D1;HS2311 | | | | | UKX11D1;HS2311 | CX11D1 | |
| 1 15/16 | UKCX11D1;HA2311 | 5.9055 | 1 21/32 | 0.118 | 2.323 | UKX11D1;HA2311 | CX11D1 | 8.8 |
| 2 | UKCX11D1;HE2311XY | | | | | UKX11D1;HE2311X | CX11D1 | |
| 55 | UKCX12D1;H2312X | 160 | 44 | 3 | 62 | UKX12D1;H2312X | CX12D1 | 3.9 |
| 2 1/8 | UKCX12D1;HS2312 | 6.2992 | 1 47/64 | 0.118 | 2.441 | UKX12D1;HS2312 | CX12D1 | 8.6 |

Remarks: 1) These numbers indicate relubricatable type. If maintenance free type is needed, please order without suffix "D1".
2) Adapter number with suffix "X" means a narrow slot type adapter sleeve.
In this case the lock washer with the straight inner prong should be used.
3) For HE2311XY, screw thread pitch different from the standard is applied, because of the thin thread section of sleeve.
To distinguish it, a suffix "Y" is added.

Note: Please refer to page 36 for size of grease fitting.

## Take-up stretcher units®
## Set screw type

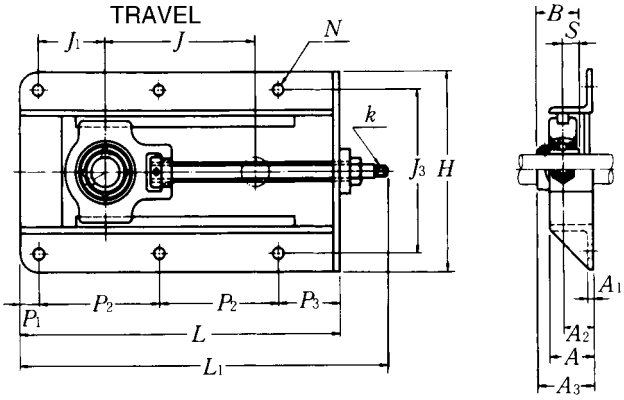


| Shaft dia. mm | Unit [1] number | Nominal dimensions mm | | | | | | | | | | | | | | | | |
|---|---|---|---|---|---|---|---|---|---|---|---|---|---|---|---|---|---|---|
| | | $L$ | $H$ | $J$ | $J_1$ | $J_3$ | $A_1$ | $A_2$ | $A$ | $P_1$ | $P_2$ | $P_3$ | $N$ | $L_1$ | $A_3$ | $B$ | $S$ | $k$ square |
| 12 | UCT201-15 | 317 | 199 | 150 | 69 | 154 | 6 | 30 | 50 | 19 | 117 | 64 | 12 | 370 | 48.3 | 31 | 12.7 | 9 |
| 15 | UCT202-15 | 317 | 199 | 150 | 69 | 154 | 6 | 30 | 50 | 19 | 117 | 64 | 12 | 370 | 48.3 | 31 | 12.7 | 9 |
| 17 | UCT203-15 | 317 | 199 | 150 | 69 | 154 | 6 | 30 | 50 | 19 | 117 | 64 | 12 | 370 | 48.3 | 31 | 12.7 | 9 |
| 20 | UCT204-15 | 317 | 199 | 150 | 69 | 154 | 6 | 30 | 50 | 19 | 117 | 64 | 12 | 370 | 48.3 | 31 | 12.7 | 9 |
| 25 | UCT205-15 | 317 | 199 | 150 | 68 | 154 | 6 | 30 | 50 | 19 | 117 | 64 | 12 | 370 | 49.8 | 34.1 | 14.3 | 9 |
| 30 | UCT206-15 | 337 | 212 | 150 | 73 | 166 | 6 | 32 | 50 | 19 | 127 | 64 | 12 | 393 | 54.2 | 38.1 | 15.9 | 10 |
| 35 | UCT207-23 | 429 | 212 | 230 | 80 | 166 | 6 | 32 | 50 | 19 | 173 | 64 | 12 | 485 | 57.4 | 42.9 | 17.5 | 10 |
| 40 | UCT208-30 | 520 | 233 | 300 | 88 | 192 | 6 | 32 | 50 | 22 | 217 | 64 | 12 | 596 | 62.2 | 49.2 | 19 | 15 |
| 45 | UCT209-30 | 520 | 233 | 300 | 88 | 192 | 6 | 32 | 50 | 22 | 217 | 64 | 12 | 596 | 62.2 | 49.2 | 19 | 15 |
| 50 | UCT210-30 | 524 | 233 | 300 | 92 | 192 | 6 | 35 | 50 | 22 | 219 | 64 | 15 | 599 | 67.6 | 51.6 | 19 | 15 |
| 55 | UCT211-30 | 542 | 285 | 300 | 93 | 240 | 8 | 38 | 65 | 22 | 230 | 60 | 15 | 630 | 71.4 | 55.6 | 22.2 | 17 |
| 60 | UCT212-30 | 568 | 285 | 300 | 103 | 240 | 8 | 38 | 65 | 22 | 243 | 60 | 15 | 657 | 77.7 | 65.1 | 25.4 | 17 |
| 65 | UCT213-30 | 606 | 306 | 300 | 125 | 260 | 8 | 43 | 65 | 22 | 260 | 64 | 15 | 705 | 82.7 | 65.1 | 25.4 | 23 |

Remarks: 1) If relubricatable type is needed, please order with suffix "D1".
2) The Stretcher Unit is designed to only take a horizontal radial load, in line with the adjustment direction. Axial loads or vertical radial loads can deform or break the housing.

| Bolt size | Max. load 2) recommended N | Bearing number | Basic load ratings N dynamic $C_r$ | static $C_{or}$ | Mass of unit kg |
|---|---|---|---|---|---|
| M10 | 7 650 | UC201D1 | 12 800 | 6 650 | 5.0 |
| M10 | 7 650 | UC202D1 | 12 800 | 6 650 | 5.0 |
| M10 | 7 650 | UC203D1 | 12 800 | 6 650 | 5.0 |
| M10 | 7 650 | UC204D1 | 12 800 | 6 650 | 5.0 |
| M10 | 7 850 | UC205D1 | 14 000 | 7 850 | 5.0 |
| M10 | 9 810 | UC206D1 | 19 500 | 11 300 | 5.7 |
| M10 | 12 750 | UC207D1 | 25 700 | 15 300 | 6.8 |
| M10 | 15 690 | UC208D1 | 29 100 | 17 800 | 11 |
| M10 | 15 690 | UC209D1 | 32 500 | 20 400 | 11 |
| M12 | 16 670 | UC210D1 | 35 000 | 23 200 | 11 |
| M12 | 19 610 | UC211D1 | 43 500 | 29 200 | 18 |
| M12 | 21 570 | UC212D1 | 52 500 | 36 000 | 20 |
| M12 | 23 530 | UC213D1 | 57 500 | 40 000 | 23 |

## Type L stretcher units®
## Set screw type

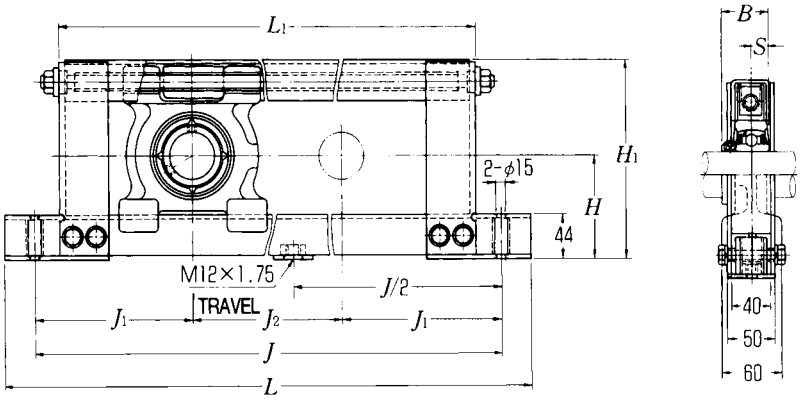


| Shaft dia. mm | Unit number [1] | Nominal dimensions mm H | L | J | J2 | L1 | J1 | H1 | B | S | Bolt size | Max. load[2] recommended N | Bearing number | Basic load ratings N dynamic Cr | static Cor | Mass of unit kg |
|---|---|---|---|---|---|---|---|---|---|---|---|---|---|---|---|---|
| 20 | UCL204-10 | 77 | 430 | 370 | 100 | 320 | 135 | 146 | 31 | 12.7 | M12 | 1 960 | UC204D1 | 12 800 | 6 650 | 6.3 |
| | UCL204-20 | 77 | 530 | 470 | 200 | 420 | 135 | 146 | 31 | 12.7 | M12 | 1 960 | UC204D1 | 12 800 | 6 650 | 7.0 |
| | UCL204-30 | 77 | 630 | 570 | 300 | 520 | 135 | 146 | 31 | 12.7 | M12 | 1 960 | UC204D1 | 12 800 | 6 650 | 7.7 |
| | UCL204-40 | 77 | 730 | 670 | 400 | 620 | 135 | 146 | 31 | 12.7 | M12 | 1 960 | UC204D1 | 12 800 | 6 650 | 8.4 |
| 25 | UCL205-10 | 82 | 440 | 380 | 100 | 330 | 140 | 156 | 34.1 | 14.3 | M12 | 2 250 | UC205D1 | 14 000 | 7 850 | 6.8 |
| | UCL205-20 | 82 | 540 | 480 | 200 | 430 | 140 | 156 | 34.1 | 14.3 | M12 | 2 250 | UC205D1 | 14 000 | 7 850 | 7.5 |
| | UCL205-30 | 82 | 640 | 580 | 300 | 530 | 140 | 156 | 34.1 | 14.3 | M12 | 2 250 | UC205D1 | 14 000 | 7 850 | 8.2 |
| | UCL205-40 | 82 | 740 | 680 | 400 | 630 | 140 | 156 | 34.1 | 14.3 | M12 | 2 250 | UC205D1 | 14 000 | 7 850 | 8.9 |
| 30 | UCL206-10 | 87 | 450 | 390 | 100 | 340 | 145 | 166 | 38.1 | 15.9 | M12 | 3 230 | UC206D1 | 19 500 | 11 300 | 7.3 |
| | UCL206-20 | 87 | 550 | 490 | 200 | 440 | 145 | 166 | 38.1 | 15.9 | M12 | 3 230 | UC206D1 | 19 500 | 11 300 | 8.0 |
| | UCL206-30 | 87 | 650 | 590 | 300 | 540 | 145 | 166 | 38.1 | 15.9 | M12 | 3 230 | UC206D1 | 19 500 | 11 300 | 8.7 |
| | UCL206-40 | 87 | 750 | 690 | 400 | 640 | 145 | 166 | 38.1 | 15.9 | M12 | 3 230 | UC206D1 | 19 500 | 11 300 | 9.4 |
| 35 | UCL207-10 | 92 | 460 | 400 | 100 | 350 | 150 | 176 | 42.9 | 17.5 | M12 | 4 210 | UC207D1 | 25 700 | 15 300 | 7.8 |
| | UCL207-20 | 92 | 560 | 500 | 200 | 450 | 150 | 176 | 42.9 | 17.5 | M12 | 4 210 | UC207D1 | 25 700 | 15 300 | 8.5 |
| | UCL207-30 | 92 | 660 | 600 | 300 | 550 | 150 | 176 | 42.9 | 17.5 | M12 | 4 210 | UC207D1 | 25 700 | 15 300 | 9.2 |
| | UCL207-40 | 92 | 760 | 700 | 400 | 650 | 150 | 176 | 42.9 | 17.5 | M12 | 4 210 | UC207D1 | 25 700 | 15 300 | 9.9 |
| 40 | UCL208-10 | 97 | 470 | 410 | 100 | 360 | 155 | 186 | 49.2 | 19 | M12 | 4 500 | UC208D1 | 29 100 | 17 800 | 8.3 |
| | UCL208-20 | 97 | 570 | 510 | 200 | 460 | 155 | 186 | 49.2 | 19 | M12 | 4 500 | UC208D1 | 29 100 | 17 800 | 9.0 |
| | UCL208-30 | 97 | 670 | 610 | 300 | 560 | 155 | 186 | 49.2 | 19 | M12 | 4 500 | UC208D1 | 29 100 | 17 800 | 9.7 |
| | UCL208-40 | 97 | 770 | 710 | 400 | 660 | 155 | 186 | 49.2 | 19 | M12 | 4 500 | UC208D1 | 29 100 | 17 800 | 10 |
| 45 | UCL209-10 | 100 | 480 | 420 | 100 | 370 | 160 | 192 | 49.2 | 19 | M12 | 4 500 | UC209D1 | 32 500 | 20 400 | 8.7 |
| | UCL209-20 | 100 | 580 | 520 | 200 | 470 | 160 | 192 | 49.2 | 19 | M12 | 4 500 | UC209D1 | 32 500 | 20 400 | 9.4 |
| | UCL209-30 | 100 | 680 | 620 | 300 | 570 | 160 | 192 | 49.2 | 19 | M12 | 4 500 | UC209D1 | 32 500 | 20 400 | 10 |
| | UCL209-40 | 100 | 780 | 720 | 400 | 670 | 160 | 192 | 49.2 | 19 | M12 | 4 500 | UC209D1 | 32 500 | 20 400 | 11 |

Remarks: 1) If relubricatable type is needed, please order with suffix "D1".
2) The Stretcher Unit is designed to only take a horizontal radial load, in line with the adjustment direction. Axial loads or vertical radial loads can deform or break the housing.

## Type M stretcher units®
## Set screw type

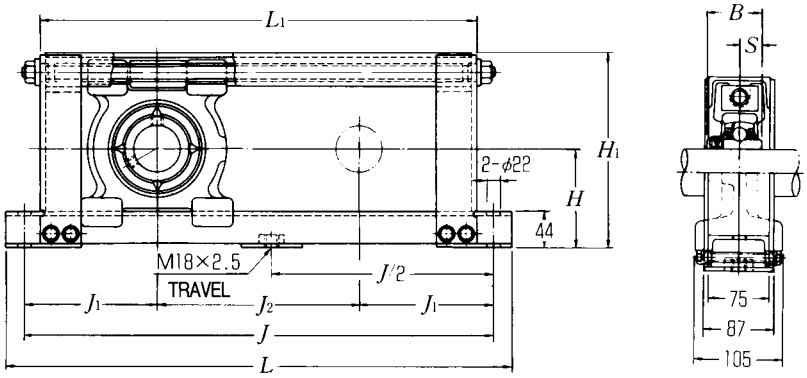


| Shaft dia. mm | Unit [1] number | Nominal dimensions mm H | L | J | $J_2$ | $L_1$ | $J_1$ | $H_1$ | B | S | Bolt size | Max. load[2] recommended N | Bearing number | Basic load ratings N dynamic $C_r$ | static $C_{or}$ | Mass of unit kg |
|---|---|---|---|---|---|---|---|---|---|---|---|---|---|---|---|---|
| 40 | UCM208-50 | 97 | 870 | 810 | 500 | 760 | 155 | 190 | 49.2 | 19 | M18 | 5 190 | UC208D1 | 29 100 | 17 800 | 20 |
| | UCM208-60 | 97 | 970 | 910 | 600 | 860 | 155 | 190 | 49.2 | 19 | M18 | 5 190 | UC208D1 | 29 100 | 17 800 | 22 |
| | UCM208-70 | 97 | 1 070 | 1 010 | 700 | 960 | 155 | 190 | 49.2 | 19 | M18 | 5 190 | UC208D1 | 29 100 | 17 800 | 23 |
| | UCM208-80 | 97 | 1 170 | 1 110 | 800 | 1 060 | 155 | 190 | 49.2 | 19 | M18 | 5 190 | UC208D1 | 29 100 | 17 800 | 24 |
| | UCM208-90 | 97 | 1 270 | 1 210 | 900 | 1 160 | 155 | 190 | 49.2 | 19 | M18 | 5 190 | UC208D1 | 29 100 | 17 800 | 30 |
| 45 | UCM209-50 | 102 | 880 | 820 | 500 | 770 | 160 | 200 | 49.2 | 19 | M18 | 5 880 | UC209D1 | 32 500 | 20 400 | 21 |
| | UCM209-60 | 102 | 980 | 920 | 600 | 870 | 160 | 200 | 49.2 | 19 | M18 | 5 880 | UC209D1 | 32 500 | 20 400 | 23 |
| | UCM209-70 | 102 | 1 080 | 1 020 | 700 | 970 | 160 | 200 | 49.2 | 19 | M18 | 5 880 | UC209D1 | 32 500 | 20 400 | 24 |
| | UCM209-80 | 102 | 1 180 | 1 120 | 800 | 1 070 | 160 | 200 | 49.2 | 19 | M18 | 5 880 | UC209D1 | 32 500 | 20 400 | 30 |
| | UCM209-90 | 102 | 1 280 | 1 220 | 900 | 1 170 | 160 | 200 | 49.2 | 19 | M18 | 5 880 | UC209D1 | 32 500 | 20 400 | 32 |
| 50 | UCM210-50 | 107 | 890 | 830 | 500 | 780 | 165 | 210 | 51.6 | 19 | M18 | 6 460 | UC210D1 | 35 000 | 23 200 | 23 |
| | UCM210-60 | 107 | 990 | 930 | 600 | 880 | 165 | 210 | 51.6 | 19 | M18 | 6 460 | UC210D1 | 35 000 | 23 200 | 24 |
| | UCM210-70 | 107 | 1 090 | 1 030 | 700 | 980 | 165 | 210 | 51.6 | 19 | M18 | 6 460 | UC210D1 | 35 000 | 23 200 | 30 |
| | UCM210-80 | 107 | 1 190 | 1 130 | 800 | 1 080 | 165 | 210 | 51.6 | 19 | M18 | 6 460 | UC210D1 | 35 000 | 23 200 | 32 |
| | UCM210-90 | 107 | 1 290 | 1 230 | 900 | 1 180 | 165 | 210 | 51.6 | 19 | M18 | 6 460 | UC210D1 | 35 000 | 23 200 | 33 |
| 55 | UCM211-50 | 115 | 910 | 850 | 500 | 800 | 175 | 230 | 55.6 | 22.2 | M18 | 6 460 | UC211D1 | 43 500 | 29 200 | 25 |
| | UCM211-60 | 115 | 1 010 | 950 | 600 | 900 | 175 | 230 | 55.6 | 22.2 | M18 | 6 460 | UC211D1 | 43 500 | 29 200 | 27 |
| | UCM211-70 | 115 | 1 110 | 1 050 | 700 | 1 000 | 175 | 230 | 55.6 | 22.2 | M18 | 6 460 | UC211D1 | 43 500 | 29 200 | 32 |
| | UCM211-80 | 115 | 1 210 | 1 150 | 800 | 1 100 | 175 | 230 | 55.6 | 22.2 | M18 | 6 460 | UC211D1 | 43 500 | 29 200 | 34 |
| | UCM211-90 | 115 | 1 310 | 1 250 | 900 | 1 200 | 175 | 230 | 55.6 | 22.2 | M18 | 6 460 | UC211D1 | 43 500 | 29 200 | 36 |
| 60 | UCM212-50 | 120 | 920 | 860 | 500 | 810 | 180 | 240 | 65.1 | 25.4 | M18 | 6 460 | UC212D1 | 52 500 | 36 000 | 28 |
| | UCM212-60 | 120 | 1 020 | 960 | 600 | 910 | 180 | 240 | 65.1 | 25.4 | M18 | 6 460 | UC212D1 | 52 500 | 36 000 | 29 |
| | UCM212-70 | 120 | 1 120 | 1 060 | 700 | 1 010 | 180 | 240 | 65.1 | 25.4 | M18 | 6 460 | UC212D1 | 52 500 | 36 000 | 35 |
| | UCM212-80 | 120 | 1 220 | 1 160 | 800 | 1 110 | 180 | 240 | 65.1 | 25.4 | M18 | 6 460 | UC212D1 | 52 500 | 36 000 | 36 |
| | UCM212-90 | 120 | 1 320 | 1 260 | 900 | 1 210 | 180 | 240 | 65.1 | 25.4 | M18 | 6 460 | UC212D1 | 52 500 | 36 000 | 38 |
| 65 | UCM213-50 | 125 | 940 | 880 | 500 | 830 | 190 | 250 | 65.1 | 25.4 | M18 | 6 460 | UC213D1 | 57 500 | 40 000 | 30 |
| | UCM213-60 | 125 | 1 040 | 980 | 600 | 930 | 190 | 250 | 65.1 | 25.4 | M18 | 6 460 | UC213D1 | 57 500 | 40 000 | 31 |
| | UCM213-70 | 125 | 1 140 | 1 080 | 700 | 1 030 | 190 | 250 | 65.1 | 25.4 | M18 | 6 460 | UC213D1 | 57 500 | 40 000 | 36 |
| | UCM213-80 | 125 | 1 240 | 1 180 | 800 | 1 130 | 190 | 250 | 65.1 | 25.4 | M18 | 6 460 | UC213D1 | 57 500 | 40 000 | 38 |
| | UCM213-90 | 125 | 1 340 | 1 280 | 900 | 1 230 | 190 | 250 | 65.1 | 25.4 | M18 | 6 460 | UC213D1 | 57 500 | 40 000 | 40 |

Remarks: 1) If relubricatable type is needed, please order with suffix "D1".
2) The Stretcher Unit is designed to only take a horizontal radial load, in line with the adjustment direction. Axial loads or vertical radial loads can deform or break the housing.

## Type M stretcher units®
## Set screw type

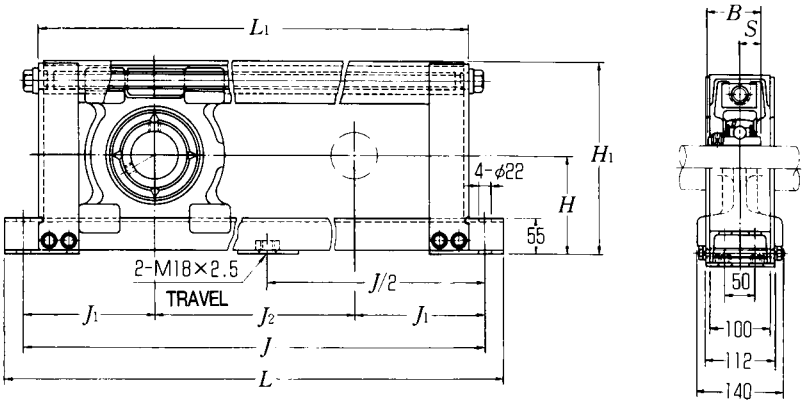


| Shaft dia. mm | Unit[1] number | Nominal dimensions mm H | L | J | J2 | L1 | J1 | H1 | B | S | Bolt size | Max. load[2] recommended N | Bearing number | Basic load ratings N dynamic Cr | static Cor | Mass of unit kg |
|---|---|---|---|---|---|---|---|---|---|---|---|---|---|---|---|---|
| 65 | UCM313-50 | 145 | 940 | 880 | 500 | 830 | 190 | 285 | 75 | 30 | M18 | 16 260 | UC313D1 | 92 500 | 60 000 | 47 |
| | UCM313-60 | 145 | 1 040 | 980 | 600 | 930 | 190 | 285 | 75 | 30 | M18 | 16 260 | UC313D1 | 92 500 | 60 000 | 50 |
| | UCM313-70 | 145 | 1 140 | 1 080 | 700 | 1 030 | 190 | 285 | 75 | 30 | M18 | 16 260 | UC313D1 | 92 500 | 60 000 | 53 |
| | UCM313-80 | 145 | 1 240 | 1 180 | 800 | 1 130 | 190 | 285 | 75 | 30 | M18 | 16 260 | UC313D1 | 92 500 | 60 000 | 55 |
| | UCM313-90 | 145 | 1 340 | 1 280 | 900 | 1 230 | 190 | 285 | 75 | 30 | M18 | 16 260 | UC313D1 | 92 500 | 60 000 | 58 |
| 70 | UCM314-50 | 150 | 960 | 900 | 500 | 850 | 200 | 295 | 78 | 33 | M18 | 19 600 | UC314D1 | 104 000 | 68 000 | 49 |
| | UCM314-60 | 150 | 1 060 | 1 000 | 600 | 950 | 200 | 295 | 78 | 33 | M18 | 19 600 | UC314D1 | 104 000 | 68 000 | 52 |
| | UCM314-70 | 150 | 1 160 | 1 100 | 700 | 1 050 | 200 | 295 | 78 | 33 | M18 | 19 600 | UC314D1 | 104 000 | 68 000 | 55 |
| | UCM314-80 | 150 | 1 260 | 1 200 | 800 | 1 150 | 200 | 295 | 78 | 33 | M18 | 19 600 | UC314D1 | 104 000 | 68 000 | 58 |
| | UCM314-90 | 150 | 1 360 | 1 300 | 900 | 1 250 | 200 | 295 | 78 | 33 | M18 | 19 600 | UC314D1 | 104 000 | 68 000 | 61 |
| 75 | UCM315-50 | 155 | 980 | 920 | 500 | 870 | 210 | 305 | 82 | 32 | M18 | 19 600 | UC315D1 | 113 000 | 77 000 | 52 |
| | UCM315-60 | 155 | 1 080 | 1 020 | 600 | 970 | 210 | 305 | 82 | 32 | M18 | 19 600 | UC315D1 | 113 000 | 77 000 | 55 |
| | UCM315-70 | 155 | 1 180 | 1 120 | 700 | 1 070 | 210 | 305 | 82 | 32 | M18 | 19 600 | UC315D1 | 113 000 | 77 000 | 58 |
| | UCM315-80 | 155 | 1 280 | 1 220 | 800 | 1 170 | 210 | 305 | 82 | 32 | M18 | 19 600 | UC315D1 | 113 000 | 77 000 | 60 |
| | UCM315-90 | 155 | 1 380 | 1 320 | 900 | 1 270 | 210 | 305 | 82 | 32 | M18 | 19 600 | UC315D1 | 113 000 | 77 000 | 63 |
| 80 | UCM316-50 | 160 | 1 000 | 940 | 500 | 890 | 220 | 315 | 86 | 34 | M18 | 19 600 | UC316D1 | 123 000 | 86 500 | 54 |
| | UCM316-60 | 160 | 1 100 | 1 040 | 600 | 990 | 220 | 315 | 86 | 34 | M18 | 19 600 | UC316D1 | 123 000 | 86 500 | 57 |
| | UCM316-70 | 160 | 1 200 | 1 140 | 700 | 1 090 | 220 | 315 | 86 | 34 | M18 | 19 600 | UC316D1 | 123 000 | 86 500 | 60 |
| | UCM316-80 | 160 | 1 300 | 1 240 | 800 | 1 190 | 220 | 315 | 86 | 34 | M18 | 19 600 | UC316D1 | 123 000 | 86 500 | 63 |
| | UCM316-90 | 160 | 1 400 | 1 340 | 900 | 1 290 | 220 | 315 | 86 | 34 | M18 | 19 600 | UC316D1 | 123 000 | 86 500 | 66 |
| 85 | UCM317-50 | 165 | 1 020 | 960 | 500 | 910 | 230 | 325 | 96 | 40 | M18 | 19 600 | UC317D1 | 133 000 | 97 000 | 60 |
| | UCM317-60 | 165 | 1 120 | 1 060 | 600 | 1 010 | 230 | 325 | 96 | 40 | M18 | 19 600 | UC317D1 | 133 000 | 97 000 | 63 |
| | UCM317-70 | 165 | 1 220 | 1 160 | 700 | 1 110 | 230 | 325 | 96 | 40 | M18 | 19 600 | UC317D1 | 133 000 | 97 000 | 65 |
| | UCM317-80 | 165 | 1 320 | 1 260 | 800 | 1 210 | 230 | 325 | 96 | 40 | M18 | 19 600 | UC317D1 | 133 000 | 97 000 | 68 |
| | UCM317-90 | 165 | 1 420 | 1 360 | 900 | 1 310 | 230 | 325 | 96 | 40 | M18 | 19 600 | UC317D1 | 133 000 | 97 000 | 71 |
| 90 | UCM318-50 | 170 | 1 050 | 990 | 500 | 940 | 245 | 335 | 96 | 40 | M18 | 19 600 | UC318D1 | 143 000 | 107 000 | 65 |
| | UCM318-60 | 170 | 1 150 | 1 090 | 600 | 1 040 | 245 | 335 | 96 | 40 | M18 | 19 600 | UC318D1 | 143 000 | 107 000 | 68 |
| | UCM318-70 | 170 | 1 250 | 1 190 | 700 | 1 140 | 245 | 335 | 96 | 40 | M18 | 19 600 | UC318D1 | 143 000 | 107 000 | 71 |
| | UCM318-80 | 170 | 1 350 | 1 290 | 800 | 1 240 | 245 | 335 | 96 | 40 | M18 | 19 600 | UC318D1 | 143 000 | 107 000 | 74 |
| | UCM318-90 | 170 | 1 450 | 1 390 | 900 | 1 340 | 245 | 335 | 96 | 40 | M18 | 19 600 | UC318D1 | 143 000 | 107 000 | 77 |

Remarks: 1) If relubricatable type is needed, please order with suffix "D1".
2) The Stretcher Unit is designed to only take a horizontal radial load, in line with the adjustment direction. Axial loads or vertical radial loads can deform or break the housing.

## Type M stretcher units®
## Set screw type

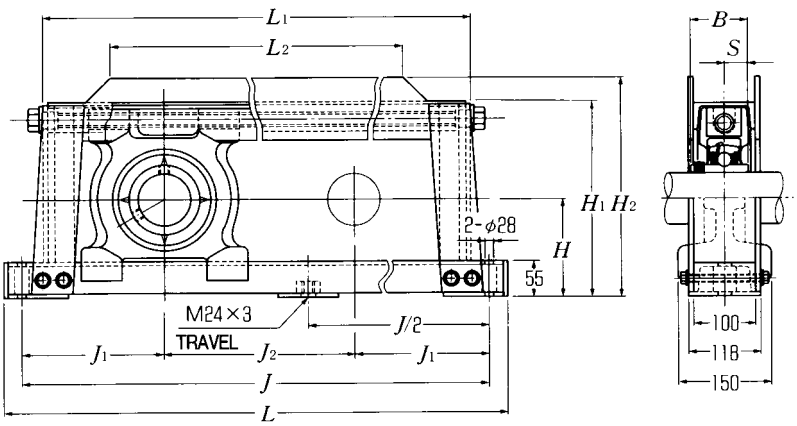


| Shaft dia. mm | Unit [1] number | Nominal dimensions mm H | L | J | $J_2$ | $L_1$ | $L_2$ | $J_1$ | $H_1$ | $H_2$ | B | S | Bolt size | Max. load[2] recommended N | Bearing number | Basic load ratings N dynamic $C_r$ | static $C_{or}$ | Mass of unit kg |
|---|---|---|---|---|---|---|---|---|---|---|---|---|---|---|---|---|---|---|
| 95 | UCM319-50 | 185 | 1 180 | 1 100 | 500 | 1 021 | 775 | 300 | 377 | 400 | 103 | 41 | M24 | 19 600 | UC319D1 | 153 000 | 119 000 | 105 |
| | UCM319-60 | 185 | 1 280 | 1 200 | 600 | 1 121 | 875 | 300 | 377 | 400 | 103 | 41 | M24 | 19 600 | UC319D1 | 153 000 | 119 000 | 109 |
| | UCM319-70 | 185 | 1 380 | 1 300 | 700 | 1 221 | 975 | 300 | 377 | 400 | 103 | 41 | M24 | 19 600 | UC319D1 | 153 000 | 119 000 | 112 |
| | UCM319-80 | 185 | 1 480 | 1 400 | 800 | 1 321 | 1 075 | 300 | 377 | 400 | 103 | 41 | M24 | 19 600 | UC319D1 | 153 000 | 119 000 | 116 |
| | UCM319-90 | 185 | 1 580 | 1 500 | 900 | 1 421 | 1 175 | 300 | 377 | 400 | 103 | 41 | M24 | 19 600 | UC319D1 | 153 000 | 119 000 | 120 |
| 100 | UCM320-50 | 200 | 1 220 | 1 140 | 500 | 1 063 | 809 | 320 | 403 | 430 | 108 | 42 | M24 | 19 600 | UC320D1 | 173 000 | 141 000 | 111 |
| | UCM320-60 | 200 | 1 320 | 1 240 | 600 | 1 163 | 909 | 320 | 403 | 430 | 108 | 42 | M24 | 19 600 | UC320D1 | 173 000 | 141 000 | 116 |
| | UCM320-70 | 200 | 1 420 | 1 340 | 700 | 1 263 | 1 009 | 320 | 403 | 430 | 108 | 42 | M24 | 19 600 | UC320D1 | 173 000 | 141 000 | 120 |
| | UCM320-80 | 200 | 1 520 | 1 440 | 800 | 1 363 | 1 109 | 320 | 403 | 430 | 108 | 42 | M24 | 19 600 | UC320D1 | 173 000 | 141 000 | 124 |
| | UCM320-90 | 200 | 1 620 | 1 540 | 900 | 1 463 | 1 209 | 320 | 403 | 430 | 108 | 42 | M24 | 19 600 | UC320D1 | 173 000 | 141 000 | 129 |

Remarks: 1) If relubricatable type is needed, please order with suffix "D1".
2) The Stretcher Unit is designed to only take a horizontal radial load, in line with the adjustment direction. Axial loads or vertical radial loads can deform or break the housing.

## Ball bearings
## Set screw type

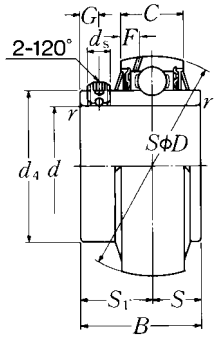


| Shaft dia. mm / inch | Bearing number | Nominal dimensions d | D | B | C | $r_s$ min. (mm / inch) | S | $S_1$ | G | ds | $d_4$ | F |
|---|---|---|---|---|---|---|---|---|---|---|---|---|
| 12 | UC201D1 | 12 | 47 | 31 | 17 | 0.6 | 12.7 | 18.3 | 4.5 | M5 × 0.8 | 29.6 | 4.7 |
| 1/2 | UC201-008D1 | 0.5000 | 1.8504 | 1.2205 | 0.6693 | 0.024 | 0.500 | 0.720 | 0.177 | No.10-32UNF | 1.1654 | 0.185 |
| 15 | UC202D1 | 15 | 47 | 31 | 17 | 0.6 | 12.7 | 18.3 | 4.5 | M5 × 0.8 | 29.6 | 4.7 |
| 9/16 | UC202-009D1 | 0.5625 | 1.8504 | 1.2205 | 0.6693 | 0.024 | 0.500 | 0.720 | 0.177 | No.10-32UNF | 1.1654 | 0.185 |
| 5/8 | UC202-010D1 | 0.6250 | | | | | | | | | | |
| 17 | UC203D1 | 17 | 47 | 31 | 17 | 0.6 | 12.7 | 18.3 | 4.5 | M5 × 0.8 | 29.6 | 4.7 |
| 11/16 | UC203-011D1 | 0.6875 | 1.8504 | 1.2205 | 0.6693 | 0.024 | 0.500 | 0.720 | 0.177 | No.10-32UNF | 1.1654 | 0.185 |
| 20 | UC204D1 | 20 | 47 | 31 | 17 | 1 | 12.7 | 18.3 | 4.5 | M5 × 0.8 | 29.6 | 4.7 |
| 3/4 | UC204-012D1 | 0.7500 | 1.8504 | 1.2205 | 0.6693 | 0.039 | 0.500 | 0.720 | 0.177 | No.10-32UNF | 1.1654 | 0.185 |
| 25 | UC205D1 | 25 | 52 | 34.1 | 17 | 1 | 14.3 | 19.8 | 5 | M5 × 0.8 | 33.9 | 4.5 |
| 13/16 | UC205-013D1 | 0.8125 | | | | | | | | | | |
| 7/8 | UC205-014D1 | 0.8750 | 2.0472 | 1.3425 | 0.6693 | 0.039 | 0.563 | 0.780 | 0.197 | No.10-32UNF | 1.3346 | 0.177 |
| 15/16 | UC205-015D1 | 0.9375 | | | | | | | | | | |
| 1 | UC205-100D1 | 1.0000 | | | | | | | | | | |
| 30 | UC206D1 | 30 | 62 | 38.1 | 19 | 1 | 15.9 | 22.2 | 5 | M6 × 0.75 | 40.8 | 4.6 |
| 1 1/16 | UC206-101D1 | 1.0625 | | | | | | | | | | |
| 1 1/8 | UC206-102D1 | 1.1250 | 2.4409 | 1.5000 | 0.7480 | 0.039 | 0.626 | 0.874 | 0.197 | 1/4-28UNF | 1.6063 | 0.181 |
| 1 3/16 | UC206-103D1 | 1.1875 | | | | | | | | | | |
| 1 1/4 | UC206-104D1 | 1.2500 | | | | | | | | | | |
| 35 | UC207D1 | 35 | 72 | 42.9 | 20 | 1.5 | 17.5 | 25.4 | 6 | M6 × 0.75 | 46.8 | 4.6 |
| 1 1/4 | UC207-104D1 | 1.2500 | | | | | | | | | | |
| 1 5/16 | UC207-105D1 | 1.3125 | 2.8346 | 1.6890 | 0.7874 | 0.059 | 0.689 | 1.000 | 0.236 | 1/4-28UNF | 1.8425 | 0.181 |
| 1 3/8 | UC207-106D1 | 1.3750 | | | | | | | | | | |
| 1 7/16 | UC207-107D1 | 1.4375 | | | | | | | | | | |
| 40 | UC208D1 | 40 | 80 | 49.2 | 21 | 1.5 | 19 | 30.2 | 8 | M8 × 1 | 53 | 4.5 |
| 1 1/2 | UC208-108D1 | 1.5000 | 3.1496 | 1.9370 | 0.8268 | 0.059 | 0.748 | 1.189 | 0.315 | 5/16-24UNF | 2.0866 | 0.177 |
| 1 9/16 | UC208-109D1 | 1.5625 | | | | | | | | | | |
| 45 | UC209D1 | 45 | 85 | 49.2 | 22 | 1.5 | 19 | 30.2 | 8 | M8 × 1 | 57.5 | 4.9 |
| 1 5/8 | UC209-110D1 | 1.6250 | | | | | | | | | | |
| 1 11/16 | UC209-111D1 | 1.6875 | 3.3465 | 1.9370 | 0.8661 | 0.059 | 0.748 | 1.189 | 0.315 | 5/16-24UNF | 2.2638 | 0.193 |
| 1 3/4 | UC209-112D1 | 1.7500 | | | | | | | | | | |

Remarks: 1) For inch series bearings, the $f_0$ factor for calculating equivalent radial load is the same as the metric series.

| Basic load ratings | | Factor[1)] | Mass | |
|---|---|---|---|---|
| N | lbf | | kg | lb |
| dynamic $C_r$ | static $C_{or}$ | $f_0$ | | |
| 12 800 | 6 650 | 13.2 | 0.21 | |
| 2 890 | 1 500 | | 0.46 | |
| 12 800 | 6 650 | 13.2 | 0.20 | |
| 2 890 | 1 500 | | 0.44 | |
| | | | 0.42 | |
| 12 800 | 6 650 | 13.2 | 0.18 | |
| 2 890 | 1 500 | | 0.39 | |
| 12 800 | 6 650 | 13.2 | 0.17 | |
| 2 890 | 1 500 | | 0.39 | |
| 14 000 | 7 850 | 13.9 | 0.20 | |
| | | | 0.53 | |
| 3 150 | 1 770 | | 0.51 | |
| | | | 0.46 | |
| | | | 0.44 | |
| 19 500 | 11 300 | 13.8 | 0.32 | |
| | | | 0.82 | |
| 4 400 | 2 540 | | 0.77 | |
| | | | 0.73 | |
| | | | 0.66 | |
| 25 700 | 15 300 | 13.8 | 0.46 | |
| | | | 1.21 | |
| 5 750 | 3 450 | | 1.15 | |
| | | | 1.08 | |
| | | | 1.01 | |
| 29 100 | 17 800 | 14.0 | 0.64 | |
| 6 550 | 4 000 | | 1.52 | |
| | | | 1.46 | |
| 32 500 | 20 400 | 14.1 | 0.68 | |
| | | | 1.76 | |
| 7 350 | 4 600 | | 1.68 | |
| | | | 1.57 | |

## Ball bearings
## Set screw type

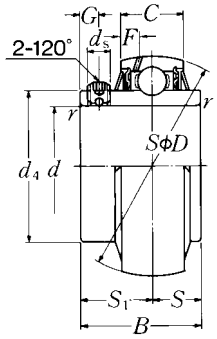


| Shaft dia. mm / inch | Bearing number | Nominal dimensions d | D | B | C | rs min. | S (mm) | S1 (inch) | G | ds | d4 | F |
|---|---|---|---|---|---|---|---|---|---|---|---|---|
| **50** | **UC210D1** | 50 | 90 | 51.6 | 24 | 1.5 | 19 | 32.6 | 9 | M8 × 1 | 62.4 | 5.9 |
| **1 13/16** | **UC210-113D1** | 1.8125 | | | | | | | | | | |
| **1 7/8** | **UC210-114D1** | 1.8750 | 3.5433 | 2.0315 | 0.9449 | 0.059 | 0.748 | 1.283 | 0.354 | 5/16-24UNF | 2.4567 | 0.232 |
| **1 15/16** | **UC210-115D1** | 1.9375 | | | | | | | | | | |
| **2** | **UC210-200D1** | 2.0000 | | | | | | | | | | |
| **55** | **UC211D1** | 55 | 100 | 55.6 | 25 | 2 | 22.2 | 33.4 | 9 | M8 × 1 | 69 | 6.0 |
| **2** | **UC211-200D1** | 2.0000 | | | | | | | | | | |
| **2 1/16** | **UC211-201D1** | 2.0625 | 3.9370 | 2.1890 | 0.9843 | 0.079 | 0.874 | 1.315 | 0.354 | 5/16-24UNF | 2.7165 | 0.236 |
| **2 1/8** | **UC211-202D1** | 2.1250 | | | | | | | | | | |
| **2 3/16** | **UC211-203D1** | 2.1875 | | | | | | | | | | |
| **60** | **UC212D1** | 60 | 110 | 65.1 | 27 | 2 | 25.4 | 39.7 | 10 | M10 × 1.25 | 77 | 6.2 |
| **2 1/4** | **UC212-204D1** | 2.2500 | | | | | | | | | | |
| **2 5/16** | **UC212-205D1** | 2.3125 | 4.3307 | 2.5630 | 1.0630 | 0.079 | 1.000 | 1.563 | 0.394 | 3/8-24UNF | 3.0315 | 0.244 |
| **2 3/8** | **UC212-206D1** | 2.3750 | | | | | | | | | | |
| **2 7/16** | **UC212-207D1** | 2.4375 | | | | | | | | | | |
| **65** | **UC213D1** | 65 | 120 | 65.1 | 32 | 2 | 25.4 | 39.7 | 10 | M10 × 1.25 | 82.5 | 8.7 |
| **2 1/2** | **UC213-208D1** | 2.5000 | 4.7244 | 2.5630 | 1.2598 | 0.079 | 1.000 | 1.563 | 0.394 | 3/8-24UNF | 3.2480 | 0.343 |
| **2 9/16** | **UC213-209D1** | 2.5625 | | | | | | | | | | |
| **70** | **UC214D1** | 70 | 125 | 74.6 | 33 | 2 | 30.2 | 44.4 | 12 | M10 × 1.25 | 87 | 8.8 |
| **2 5/8** | **UC214-210D1** | 2.6250 | | | | | | | | | | |
| **2 11/16** | **UC214-211D1** | 2.6875 | 4.9213 | 2.9370 | 1.2992 | 0.079 | 1.189 | 1.748 | 0.472 | 3/8-24UNF | 3.4252 | 0.346 |
| **2 3/4** | **UC214-212D1** | 2.7500 | | | | | | | | | | |
| **75** | **UC215D1** | 75 | 130 | 77.8 | 34 | 2 | 33.3 | 44.5 | 12 | M10 × 1.25 | 93 | 9.0 |
| **2 13/16** | **UC215-213D1** | 2.8125 | | | | | | | | | | |
| **2 7/8** | **UC215-214D1** | 2.8750 | 5.1181 | 3.0630 | 1.3386 | 0.079 | 1.311 | 1.752 | 0.472 | 3/8-24UNF | 3.6614 | 0.354 |
| **2 15/16** | **UC215-215D1** | 2.9375 | | | | | | | | | | |
| **3** | **UC215-300D1** | 3.0000 | | | | | | | | | | |
| **80** | **UC216D1** | 80 | 140 | 82.6 | 35 | 2.5 | 33.3 | 49.3 | 12 | M10 × 1.25 | 98.1 | 9.5 |
| **3 1/16** | **UC216-301D1** | 3.0625 | | | | | | | | | | |
| **3 1/8** | **UC216-302D1** | 3.1250 | 5.5118 | 3.2520 | 1.3780 | 0.098 | 1.311 | 1.941 | 0.472 | 3/8-24UNF | 3.8622 | 0.374 |
| **3 3/16** | **UC216-303D1** | 3.1875 | | | | | | | | | | |

Remarks: 1) For inch series bearings, the $f_0$ factor for calculating equivalent radial load is the same as the metric series.

| Basic load ratings | | Factor[1)] | Mass |
|---|---|---|---|
| N | lbf | | kg lb |
| dynamic $C_r$ | static $C_{or}$ | $f_0$ | |
| 35 000 | 23 200 | 14.4 | 0.78 |
| | | | 2.03 |
| 7 900 | 5 200 | | 1.92 |
| | | | 1.81 |
| | | | 1.69 |
| 43 500 | 29 200 | 14.3 | 1.04 |
| | | | 2.71 |
| 9 750 | 6 550 | | 2.60 |
| | | | 2.46 |
| | | | 2.34 |
| 52 500 | 36 000 | 14.3 | 1.46 |
| | | | 3.66 |
| 11 800 | 8 150 | | 3.50 |
| | | | 3.33 |
| | | | 3.17 |
| 57 500 | 40 000 | 14.4 | 1.86 |
| 12 900 | 9 000 | | 4.26 |
| | | | 4.09 |
| 62 000 | 44 000 | 14.5 | 2.10 |
| | | | 5.09 |
| 14 000 | 9 900 | | 4.87 |
| | | | 4.65 |
| 66 000 | 49 500 | 14.7 | 2.34 |
| | | | 5.73 |
| 14 900 | 11 100 | | 5.49 |
| | | | 5.25 |
| | | | 4.98 |
| 72 500 | 53 000 | 14.6 | 2.78 |
| | | | 6.57 |
| 16 300 | 11 900 | | 6.28 |
| | | | 6.00 |

## Ball bearings
## Set screw type

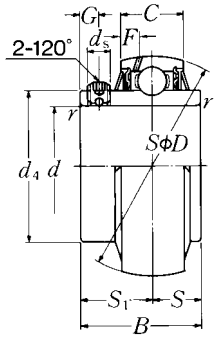


| Shaft dia. mm inch | Bearing number | Nominal dimensions | | | | | | | | | | |
|---|---|---|---|---|---|---|---|---|---|---|---|---|
| | | | | | | mm | | inch | | | | |
| | | $d$ | $D$ | $B$ | $C$ | $r_s$ min. | $S$ | $S_1$ | $G$ | $ds$ | $d_4$ | $F$ |
| **85** | **UC217D1** | 85 | 150 | 85.7 | 36 | 2.5 | 34.1 | 51.6 | 12 | M12 × 1.5 | 106.4 | 10.1 |
| **3¼** | **UC217-304D1** | 3.2500 | | | | | | | | | | |
| **3 5/16** | **UC217-305D1** | 3.3125 | 5.9055 | 3.3740 | 1.4173 | 0.098 | 1.343 | 2.031 | 0.472 | ½-20UNF | 4.1890 | 0.398 |
| **3 7/16** | **UC217-307D1** | 3.4375 | | | | | | | | | | |
| **90** | **UC218D1** | 90 | 160 | 96 | 37 | 2.5 | 39.7 | 56.3 | 12 | M12 × 1.5 | 111.6 | 9.8 |
| **3½** | **UC218-308D1** | 3.5000 | 6.2992 | 3.7795 | 1.4570 | 0.098 | 1.563 | 2.217 | 0.472 | ½-20UNF | 4.3937 | 0.386 |

Remarks: 1) For inch series bearings, the $f_0$ factor for calculating equivalent radial load is the same as the metric series.

| Basic load ratings | | Factor[1)] | Mass | |
|---|---|---|---|---|
| N | lbf | | kg | lb |
| dynamic $C_r$ | static $C_{or}$ | $f_0$ | | |
| 83 500 | 64 000 | 14.7 | 3.54 | |
| 18 700 | 14 300 | | 7.92 | |
| | | | 7.60 | |
| | | | 6.97 | |
| 96 000 | 71 500 | 14.5 | 4.40 | |
| 21 600 | 16 100 | | 9.88 | |

## Ball bearings
## Set screw type

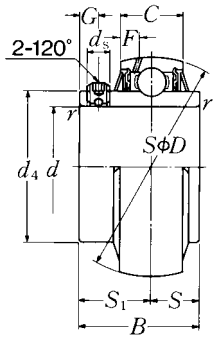


| Shaft dia. mm / inch | Bearing number | Nominal dimensions d | D | B | C | $r_s$ min. (mm) | S (mm) | $S_1$ (inch) | G | ds | $d_4$ | F |
|---|---|---|---|---|---|---|---|---|---|---|---|---|
| **25** | **UC305D1** | 25 | 62 | 38 | 20 | 1.5 | 15 | 23 | 6 | M6 × 0.75 | 36.8 | 5.0 |
| 13/16 | **UC305-013D1** | 0.8125 | | | | | | | | | | |
| 7/8 | **UC305-014D1** | 0.8750 | 2.4409 | 1.4961 | 0.7874 | 0.059 | 0.591 | 0.906 | 0.236 | 1/4-28UNF | 1.4488 | 0.197 |
| 15/16 | **UC305-015D1** | 0.9375 | | | | | | | | | | |
| **1** | **UC305-100D1** | 1.0000 | | | | | | | | | | |
| **30** | **UC306D1** | 30 | 72 | 43 | 23 | 1.5 | 17 | 26 | 6 | M6 × 0.75 | 44.9 | 5.9 |
| 1 1/16 | **UC306-101D1** | 1.0625 | | | | | | | | | | |
| 1 1/8 | **UC306-102D1** | 1.1250 | 2.8346 | 1.6929 | 0.9055 | 0.059 | 0.669 | 1.024 | 0.236 | 1/4-28UNF | 1.7677 | 0.232 |
| 1 3/16 | **UC306-103D1** | 1.1875 | | | | | | | | | | |
| **35** | **UC307D1** | 35 | 80 | 48 | 25 | 2 | 19 | 29 | 8 | M8 × 1 | 49.4 | 6.8 |
| 1 1/4 | **UC307-104D1** | 1.2500 | | | | | | | | | | |
| 1 5/16 | **UC307-105D1** | 1.3125 | 3.1496 | 1.8898 | 0.9843 | 0.079 | 0.748 | 1.142 | 0.315 | 5/16-24UNF | 1.9449 | 0.268 |
| 1 3/8 | **UC307-106D1** | 1.3750 | | | | | | | | | | |
| 1 7/16 | **UC307-107D1** | 1.4375 | | | | | | | | | | |
| **40** | **UC308D1** | 40 | 90 | 52 | 27 | 2 | 19 | 33 | 10 | M10 × 1.25 | 56 | 7.4 |
| 1 1/2 | **UC308-108D1** | 1.5000 | 3.5433 | 2.0472 | 1.0630 | 0.079 | 0.748 | 1.299 | 0.394 | 3/8-24UNF | 2.2047 | 0.291 |
| 1 9/16 | **UC308-109D1** | 1.5625 | | | | | | | | | | |
| **45** | **UC309D1** | 45 | 100 | 57 | 29 | 2 | 22 | 35 | 10 | M10 × 1.25 | 63.5 | 7.4 |
| 1 5/8 | **UC309-110D1** | 1.6250 | | | | | | | | | | |
| 1 11/16 | **UC309-111D1** | 1.6875 | 3.9370 | 2.2441 | 1.1417 | 0.079 | 0.866 | 1.378 | 0.394 | 3/8-24UNF | 2.5000 | 0.291 |
| 1 3/4 | **UC309-112D1** | 1.7500 | | | | | | | | | | |
| **50** | **UC310D1** | 50 | 110 | 61 | 32 | 2.5 | 22 | 39 | 12 | M12 × 1.5 | 70.6 | 8.1 |
| 1 13/16 | **UC310-113D1** | 1.8125 | | | | | | | | | | |
| 1 7/8 | **UC310-114D1** | 1.8750 | 4.3307 | 2.4016 | 1.2598 | 0.098 | 0.866 | 1.535 | 0.472 | 1/2-20UNF | 2.7795 | 0.319 |
| 1 15/16 | **UC310-115D1** | 1.9375 | | | | | | | | | | |
| **55** | **UC311D1** | 55 | 120 | 66 | 34 | 2.5 | 25 | 41 | 12 | M12 × 1.5 | 76.6 | 8.5 |
| **2** | **UC311-200D1** | 2.0000 | | | | | | | | | | |
| 2 1/16 | **UC311-201D1** | 2.0625 | 4.7244 | 2.5984 | 1.3386 | 0.098 | 0.984 | 1.614 | 0.472 | 1/2-20UNF | 3.0157 | 0.335 |
| 2 1/8 | **UC311-202D1** | 2.1250 | | | | | | | | | | |
| 2 3/16 | **UC311-203D1** | 2.1875 | | | | | | | | | | |

Remarks: 1) For inch series bearings, the $f_0$ factor for calculating equivalent radial load is the same as the metric series.

| Basic load ratings | | Factor[1)] | Mass | |
|---|---|---|---|---|
| N | lbf | | kg | lb |
| dynamic $C_r$ | static $C_{or}$ | $f_0$ | | |
| 21 200 | 10 900 | 12.6 | 0.35 | |
| 4 750 | 2 460 | | 0.88 | |
| | | | 0.84 | |
| | | | 0.79 | |
| | | | 0.77 | |
| 26 700 | 15 000 | 13.3 | 0.56 | |
| 6 000 | 3 400 | | 1.34 | |
| | | | 1.28 | |
| | | | 1.23 | |
| 33 500 | 19 100 | 13.1 | 0.70 | |
| 7 500 | 4 300 | | 1.70 | |
| | | | 1.63 | |
| | | | 1.57 | |
| | | | 1.50 | |
| 40 500 | 24 000 | 13.2 | 0.96 | |
| 9 150 | 5 400 | | 2.23 | |
| | | | 2.14 | |
| 53 000 | 32 000 | 13.1 | 1.28 | |
| 11 900 | 7 200 | | 3.06 | |
| | | | 2.98 | |
| | | | 2.87 | |
| 62 000 | 38 500 | 13.2 | 1.68 | |
| 13 900 | 8 600 | | 3.95 | |
| | | | 3.84 | |
| | | | 3.70 | |
| 71 500 | 45 000 | 13.2 | 2.08 | |
| 16 100 | 10 100 | | 4.96 | |
| | | | 4.81 | |
| | | | 4.67 | |
| | | | 4.50 | |

## Ball bearings
## Set screw type

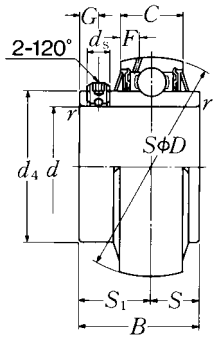


| Shaft dia. mm / inch | Bearing number | Nominal dimensions d | D | B | C | $r_s$ min. (mm) | S (mm) | $S_1$ (inch) | G | ds | $d_4$ | F |
|---|---|---|---|---|---|---|---|---|---|---|---|---|
| 60 | UC312D1 | 60 | 130 | 71 | 36 | 2.5 | 26 | 45 | 12 | M12 × 1.5 | 82.7 | 9.0 |
| 2 1/4 | UC312-204D1 | 2.2500 | | | | | | | | | | |
| 2 5/16 | UC312-205D1 | 2.3125 | 5.1181 | 2.7953 | 1.4173 | 0.098 | 1.024 | 1.772 | 0.472 | 1/2-20UNF | 3.2559 | 0.354 |
| 2 3/8 | UC312-206D1 | 2.3750 | | | | | | | | | | |
| 2 7/16 | UC312-207D1 | 2.4375 | | | | | | | | | | |
| 65 | UC313D1 | 65 | 140 | 75 | 39 | 2.5 | 30 | 45 | 12 | M12 × 1.5 | 88.2 | 10.1 |
| 2 1/2 | UC313-208D1 | 2.5000 | 5.5118 | 2.9528 | 1.5354 | 0.098 | 1.181 | 1.772 | 0.472 | 1/2-20UNF | 3.4724 | 0.398 |
| 2 9/16 | UC313-209D1 | 2.5625 | | | | | | | | | | |
| 70 | UC314D1 | 70 | 150 | 78 | 41 | 2.5 | 33 | 45 | 12 | M12 × 1.5 | 94.8 | 10.5 |
| 2 5/8 | UC314-210D1 | 2.6250 | | | | | | | | | | |
| 2 11/16 | UC314-211D1 | 2.6875 | 5.9055 | 3.0709 | 1.6142 | 0.098 | 1.299 | 1.772 | 0.472 | 1/2-20UNF | 3.7323 | 0.413 |
| 2 3/4 | UC314-212D1 | 2.7500 | | | | | | | | | | |
| 75 | UC315D1 | 75 | 160 | 82 | 43 | 2.5 | 32 | 50 | 14 | M14 × 1.5 | 101.3 | 11.0 |
| 2 13/16 | UC315-213D1 | 2.8125 | | | | | | | | | | |
| 2 7/8 | UC315-214D1 | 2.8750 | 6.2992 | 3.2283 | 1.6929 | 0.098 | 1.260 | 1.969 | 0.551 | 9/16-18UNF | 3.9882 | 0.433 |
| 2 15/16 | UC315-215D1 | 2.9375 | | | | | | | | | | |
| 3 | UC315-300D1 | 3.0000 | | | | | | | | | | |
| 80 | UC316D1 | 80 | 170 | 86 | 45 | 2.5 | 34 | 52 | 14 | M14 × 1.5 | 107.9 | 11.4 |
| 3 1/16 | UC316-301D1 | 3.0625 | | | | | | | | | | |
| 3 1/8 | UC316-302D1 | 3.1250 | 6.6929 | 3.3858 | 1.7717 | 0.098 | 1.339 | 2.047 | 0.551 | 9/16-18UNF | 4.2480 | 0.449 |
| 3 3/16 | UC316-303D1 | 3.1875 | | | | | | | | | | |
| 85 | UC317D1 | 85 | 180 | 96 | 47 | 3 | 40 | 56 | 16 | M16 × 1.5 | 114.4 | 12.0 |
| 3 1/4 | UC317-304D1 | 3.2500 | | | | | | | | | | |
| 3 5/16 | UC317-305D1 | 3.3125 | 7.0866 | 3.7795 | 1.8504 | 0.118 | 1.575 | 2.205 | 0.630 | 5/8-18UNF | 4.5039 | 0.472 |
| 3 7/16 | UC317-307D1 | 3.4375 | | | | | | | | | | |
| 90 | UC318D1 | 90 | 190 | 96 | 49 | 3 | 40 | 56 | 16 | M16 × 1.5 | 120.9 | 12.3 |
| 3 7/16 | UC318-307D1 | 3.4375 | 7.4803 | 3.7795 | 1.9291 | 0.118 | 1.575 | 2.205 | 0.630 | 5/8-18UNF | 4.7598 | 0.484 |
| 3 1/2 | UC318-308D1 | 3.5000 | | | | | | | | | | |

Remarks: 1) For inch series bearings, the $f_0$ factor for calculating equivalent radial load is the same as the metric series.

| Basic load ratings | | Factor[1)] | Mass |
|---|---|---|---|
| N | lbf | | kg lb |
| dynamic $C_r$ | static $C_{or}$ | $f_0$ | |
| 82 000 | 52 000 | 13.2 | 2.60 |
| 18 400 | 11 700 | | 6.06 |
| | | | 5.89 |
| | | | 5.68 |
| | | | 5.51 |
| 92 500 | 60 000 | 13.2 | 3.25 |
| 20 800 | 13 400 | | 7.36 |
| | | | 7.14 |
| 104 000 | 68 000 | 13.2 | 3.86 |
| 23 400 | 15 300 | | 9.06 |
| | | | 8.82 |
| | | | 8.60 |
| 113 000 | 77 000 | 13.2 | 4.70 |
| 25 500 | 17 400 | | 11.0 |
| | | | 10.7 |
| | | | 10.5 |
| | | | 10.2 |
| 123 000 | 86 500 | 13.3 | 5.60 |
| 27 600 | 19 500 | | 12.6 |
| | | | 12.3 |
| | | | 12.1 |
| 133 000 | 97 000 | 13.3 | 6.70 |
| 29 800 | 21 800 | | 15.2 |
| | | | 14.9 |
| | | | 14.2 |
| 143 000 | 107 000 | 13.3 | 7.60 |
| 32 000 | 24 100 | | 17.3 |
| | | | 16.9 |

## Ball bearings
## Set screw type

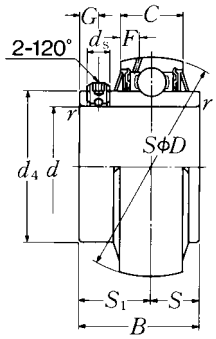


| Shaft dia. mm / inch | Bearing number | Nominal dimensions | | | | | | | | | | |
|---|---|---|---|---|---|---|---|---|---|---|---|---|
| | | $d$ | $D$ | $B$ | $C$ | $r_s$ min. | mm $S$ | inch $S_1$ | $G$ | $ds$ | $d_4$ | $F$ |
| **95** | **UC319D1** | 95 | 200 | 103 | 51 | 3 | 41 | 62 | 16 | M16 × 1.5 | 127.5 | 12.8 |
| **3 5/8** | **UC319-310D1** | 3.6250 | | | | | | | | | | |
| **3 11/16** | **UC319-311D1** | 3.6875 | 7.8740 | 4.0551 | 2.0079 | 0.118 | 1.614 | 2.441 | 0.630 | 5/8-18UNF | 5.0197 | 0.504 |
| **3 3/4** | **UC319-312D1** | 3.7500 | | | | | | | | | | |
| **100** | **UC320D1** | 100 | 215 | 108 | 55 | 3 | 42 | 66 | 18 | M18 × 1.5 | 135.6 | 13.5 |
| **3 13/16** | **UC320-313D1** | 3.8125 | | | | | | | | | | |
| **3 7/8** | **UC320-314D1** | 3.8750 | 8.4646 | 4.2520 | 2.1654 | 0.118 | 1.654 | 2.598 | 0.709 | 5/8-18UNF | 5.3386 | 0.531 |
| **3 15/16** | **UC320-315D1** | 3.9375 | | | | | | | | | | |
| **4** | **UC320-400D1** | 4.0000 | | | | | | | | | | |
| **105** | **UC321D1** | 105 | 225 | 112 | 57 | 3 | 44 | 68 | 18 | M18 × 1.5 | 142.1 | 13.9 |
| **110** | **UC322D1** | 110 | 240 | 117 | 59 | 3 | 46 | 71 | 18 | M18 × 1.5 | 151.7 | 13.9 |
| **120** | **UC324D1** | 120 | 260 | 126 | 63 | 3 | 51 | 75 | 18 | M18 × 1.5 | 165.2 | 16.0 |
| **130** | **UC326D1** | 130 | 280 | 135 | 67 | 4 | 54 | 81 | 20 | M20 × 1.5 | 178.3 | 16.9 |
| **140** | **UC328D1** | 140 | 300 | 145 | 71 | 4 | 59 | 86 | 20 | M20 × 1.5 | 190.4 | 17.7 |

Remarks: 1) For inch series bearings, the $f_0$ factor for calculating equivalent radial load is the same as the metric series.

| Basic load ratings | | Factor[1)] | Mass |
|---|---|---|---|
| N | lbf | | kg lb |
| dynamic $C_r$ | static $C_{or}$ | $f_0$ | |
| 153 000 | 119 000 | 13.3 | 8.70 |
| 34 500 | 26 600 | | 19.9 |
| | | | 19.5 |
| | | | 19.1 |
| 173 000 | 141 000 | 13.2 | 10.8 |
| 39 000 | 31 500 | | 24.7 |
| | | | 24.2 |
| | | | 23.8 |
| | | | 23.4 |
| 184 000 | 153 000 | 13.2 | 12.2 |
| 205 000 | 179 000 | 13.1 | 14.3 |
| 207 000 | 185 000 | 13.5 | 18.5 |
| 229 000 | 214 000 | 13.6 | 23.0 |
| 253 000 | 246 000 | 13.6 | 28.5 |

## Ball bearings
## Set screw type

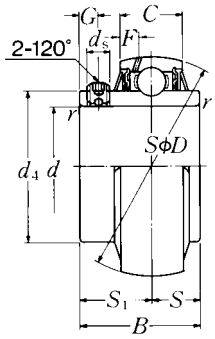


| Shaft dia. mm / inch | Bearing number | Nominal dimensions d | D | B | C | $r_s$ min. (mm) | S (mm) | $S_1$ (inch) | G | ds | $d_4$ | F |
|---|---|---|---|---|---|---|---|---|---|---|---|---|
| **25** | **UCX05D1** | 25 | 62 | 38.1 | 19 | 1 | 15.9 | 22.2 | 5 | M6 × 0.75 | 40.8 | 4.6 |
| 13/16 | **UCX05-013D1** | 0.8125 | | | | | | | | | | |
| 7/8 | **UCX05-014D1** | 0.8750 | 2.4409 | 1.5000 | 0.7480 | 0.039 | 0.626 | 0.874 | 0.197 | 1/4-28UNF | 1.6063 | 0.181 |
| 15/16 | **UCX05-015D1** | 0.9375 | | | | | | | | | | |
| **1** | **UCX05-100D1** | 1.0000 | | | | | | | | | | |
| **30** | **UCX06D1** | 30 | 72 | 42.9 | 20 | 1 | 17.5 | 25.4 | 6 | M8 × 1 | 46.8 | 4.6 |
| 1 1/16 | **UCX06-101D1** | 1.0625 | | | | | | | | | | |
| 1 1/8 | **UCX06-102D1** | 1.1250 | 2.8346 | 1.6890 | 0.7874 | 0.039 | 0.689 | 1.000 | 0.236 | 5/16-24UNF | 1.8425 | 0.181 |
| 1 3/16 | **UCX06-103D1** | 1.1875 | | | | | | | | | | |
| **35** | **UCX07D1** | 35 | 80 | 49.2 | 21 | 1.5 | 19 | 30.2 | 8 | M8 × 1 | 53 | 4.5 |
| 1 5/16 | **UCX07-105D1** | 1.3125 | | | | | | | | | | |
| 1 3/8 | **UCX07-106D1** | 1.3750 | 3.1496 | 1.9370 | 0.8268 | 0.059 | 0.748 | 1.189 | 0.315 | 5/16-24UNF | 2.0866 | 0.177 |
| 1 7/16 | **UCX07-107D1** | 1.4375 | | | | | | | | | | |
| **40** | **UCX08D1** | 40 | 85 | 49.2 | 22 | 1.5 | 19 | 30.2 | 8 | M8 × 1 | 57.5 | 4.9 |
| 1 1/2 | **UCX08-108D1** | 1.5000 | 3.3465 | 1.9370 | 0.8661 | 0.059 | 0.748 | 1.189 | 0.315 | 5/16-24UNF | 2.2638 | 0.193 |
| 1 9/16 | **UCX08-109D1** | 1.5625 | | | | | | | | | | |
| **45** | **UCX09D1** | 45 | 90 | 51.6 | 24 | 1.5 | 19 | 32.6 | 9 | M10 × 1.25 | 62.4 | 5.9 |
| 1 5/8 | **UCX09-110D1** | 1.6250 | | | | | | | | | | |
| 1 11/16 | **UCX09-111D1** | 1.6875 | 3.5433 | 2.0315 | 0.9449 | 0.059 | 0.748 | 1.283 | 0.354 | 3/8-24UNF | 2.4567 | 0.232 |
| 1 3/4 | **UCX09-112D1** | 1.7500 | | | | | | | | | | |
| **50** | **UCX10D1** | 50 | 100 | 55.6 | 25 | 1.5 | 22.2 | 33.4 | 9 | M10 × 1.25 | 69 | 6.0 |
| 1 7/8 | **UCX10-114D1** | 1.8750 | 3.9370 | 2.1890 | 0.9843 | 0.059 | 0.874 | 1.315 | 0.354 | 3/8-24UNF | 2.7165 | 0.236 |
| 1 15/16 | **UCX10-115D1** | 1.9375 | | | | | | | | | | |
| **55** | **UCX11D1** | 55 | 110 | 65.1 | 27 | 2 | 25.4 | 39.7 | 10 | M10 × 1.25 | 77 | 6.2 |
| 2 1/16 | **UCX11-201D1** | 2.0625 | | | | | | | | | | |
| 2 1/8 | **UCX11-202D1** | 2.1250 | 4.3307 | 2.5630 | 1.0630 | 0.079 | 1.000 | 1.563 | 0.394 | 3/8-24UNF | 3.0315 | 0.244 |
| 2 3/16 | **UCX11-203D1** | 2.1875 | | | | | | | | | | |
| **60** | **UCX12D1** | 60 | 120 | 65.1 | 32 | 2 | 25.4 | 39.7 | 10 | M10 × 1.25 | 82.5 | 8.7 |
| 2 3/8 | **UCX12-206D1** | 2.3750 | 4.7244 | 2.5630 | 1.2598 | 0.079 | 1.000 | 1.563 | 0.394 | 3/8-24UNF | 3.2480 | 0.343 |
| 2 7/16 | **UCX12-207D1** | 2.4375 | | | | | | | | | | |

Remarks: 1) For inch series bearings, the $f_0$ factor for calculating equivalent radial load is the same as the metric series.

| Basic load ratings | | Factor[1)] | Mass |
|---|---|---|---|
| N | lbf | | kg lb |
| dynamic $C_r$ | static $C_{or}$ | $f_0$ | |
| 19 500 | 11 300 | 13.8 | 0.39 |
| 4 400 | 2 540 | | 0.97 |
| | | | 0.93 |
| | | | 0.88 |
| | | | 0.84 |
| 25 700 | 15 300 | 13.8 | 0.68 |
| 5 750 | 3 450 | | 1.61 |
| | | | 1.54 |
| | | | 1.50 |
| 29 100 | 17 800 | 14.0 | 0.74 |
| 6 550 | 4 000 | | 1.87 |
| | | | 1.81 |
| | | | 1.74 |
| 32 500 | 20 400 | 14.1 | 0.80 |
| 7 350 | 4 600 | | 2.16 |
| | | | 2.07 |
| 35 000 | 23 200 | 14.4 | 0.94 |
| 7 900 | 5 200 | | 2.43 |
| | | | 2.34 |
| | | | 2.25 |
| 43 500 | 29 200 | 14.3 | 1.22 |
| 9 750 | 6 550 | | 3.15 |
| | | | 3.04 |
| 52 500 | 36 000 | 14.3 | 1.72 |
| 11 800 | 8 150 | | 4.43 |
| | | | 4.30 |
| | | | 4.12 |
| 57 500 | 40 000 | 14.4 | 2.10 |
| 12 900 | 9 000 | | 4.96 |
| | | | 4.81 |

## Ball bearings
## Set screw type

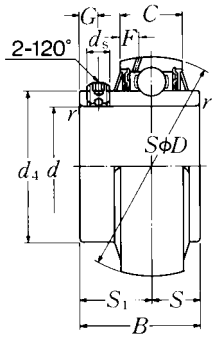


| Shaft dia. mm / inch | Bearing number | Nominal dimensions d | D | B | C | $r_s$ min. (mm) | S (mm) | $S_1$ (inch) | G | ds | $d_4$ | F |
|---|---|---|---|---|---|---|---|---|---|---|---|---|
| 65 | UCX13D1 | 65 | 125 | 74.6 | 33 | 2 | 30.2 | 44.4 | 12 | M12 × 1.5 | 87 | 8.8 |
| 2 1/2 | UCX13-208D1 | 2.5000 | 4.9213 | 2.9370 | 1.2992 | 0.079 | 1.189 | 1.748 | 0.472 | 1/2-20UNF | 3.4252 | 0.346 |
| 2 9/16 | UCX13-209D1 | 2.5625 | | | | | | | | | | |
| 70 | UCX14D1 | 70 | 130 | 77.8 | 34 | 2 | 33.3 | 44.5 | 12 | M12 × 1.5 | 93 | 9.0 |
| 2 5/8 | UCX14-210D1 | 2.6250 | | | | | | | | | | |
| 2 11/16 | UCX14-211D1 | 2.6875 | 5.1181 | 3.0630 | 1.3386 | 0.079 | 1.311 | 1.752 | 0.472 | 1/2-20UNF | 3.6614 | 0.354 |
| 2 3/4 | UCX14-212D1 | 2.7500 | | | | | | | | | | |
| 75 | UCX15D1 | 75 | 140 | 82.6 | 35 | 2 | 33.3 | 49.3 | 12 | M12 × 1.5 | 98.1 | 9.5 |
| 2 13/16 | UCX15-213D1 | 2.8125 | | | | | | | | | | |
| 2 7/8 | UCX15-214D1 | 2.8750 | 5.5118 | 3.2520 | 1.3780 | 0.079 | 1.311 | 1.941 | 0.472 | 1/2-20UNF | 3.8622 | 0.374 |
| 2 15/16 | UCX15-215D1 | 2.9375 | | | | | | | | | | |
| 3 | UCX15-300D1 | 3.0000 | | | | | | | | | | |
| 80 | UCX16D1 | 80 | 150 | 85.7 | 36 | 2.5 | 34.1 | 51.6 | 12 | M12 × 1.5 | 106.4 | 10.1 |
| 3 1/16 | UCX16-301D1 | 3.0625 | | | | | | | | | | |
| 3 1/8 | UCX16-302D1 | 3.1250 | 5.9055 | 3.3740 | 1.4173 | 0.098 | 1.343 | 2.031 | 0.472 | 1/2-20UNF | 4.1890 | 0.398 |
| 3 3/16 | UCX16-303D1 | 3.1875 | | | | | | | | | | |
| 85 | UCX17D1 | 85 | 160 | 96 | 37 | 2.5 | 39.7 | 56.3 | 12 | M12 × 1.5 | 111.6 | 9.8 |
| 3 5/16 | UCX17-305D1 | 3.3125 | 6.2992 | 3.7795 | 1.4567 | 0.098 | 1.563 | 2.217 | 0.472 | 1/2-20UNF | 4.3937 | 0.386 |
| 3 7/16 | UCX17-307D1 | 3.4375 | | | | | | | | | | |
| 90 | UCX18D1 | 90 | 170 | 104 | 39 | 2.5 | 42.9 | 61.1 | 14 | M14 × 1.5 | 118.2 | 10.5 |
| 3 7/16 | UCX18-307D1 | 3.4375 | 6.6929 | 4.0945 | 1.5354 | 0.098 | 1.689 | 2.406 | 0.551 | 9/16-18UNF | 4.6535 | 0.413 |
| 3 1/2 | UCX18-308D1 | 3.5000 | | | | | | | | | | |
| 100 | UCX20D1 | 100 | 190 | 117.5 | 44 | 2.5 | 49.2 | 68.3 | 16 | M16 × 1.5 | 131.3 | 11.3 |
| 3 13/16 | UCX20-313D1 | 3.8125 | | | | | | | | | | |
| 3 7/8 | UCX20-314D1 | 3.8750 | 7.4803 | 4.6260 | 1.7323 | 0.098 | 1.937 | 2.689 | 0.630 | 5/8-18UNF | 5.1693 | 0.445 |
| 3 15/16 | UCX20-315D1 | 3.9375 | | | | | | | | | | |
| 4 | UCX20-400D1 | 4.0000 | | | | | | | | | | |

Remarks: 1) For inch series bearings, the $f_0$ factor for calculating equivalent radial load is the same as the metric series.

| Basic load ratings | | Factor[1)] | Mass |
|---|---|---|---|
| N | lbf | | kg lb |
| dynamic $C_r$ | static $C_{or}$ | $f_0$ | |
| 62 000 | 44 000 | 14.5 | 2.45 |
| 14 000 | 9 900 | | 5.60 |
| | | | 5.38 |
| 66 000 | 49 500 | 14.7 | 2.47 |
| | | | 5.93 |
| 14 900 | 11 100 | | 5.69 |
| | | | 5.47 |
| 72 500 | 53 000 | 14.6 | 3.11 |
| | | | 7.43 |
| 16 300 | 11 900 | | 7.19 |
| | | | 6.92 |
| | | | 6.66 |
| 83 500 | 64 000 | 14.7 | 3.96 |
| | | | 8.75 |
| 18 700 | 14 300 | | 8.47 |
| | | | 8.18 |
| 96 000 | 71 500 | 14.5 | 4.72 |
| 21 600 | 16 100 | | 10.8 |
| | | | 10.1 |
| 109 000 | 82 000 | 14.4 | 5.50 |
| 24 500 | 18 400 | | 13.3 |
| | | | 12.4 |
| 133 000 | 105 000 | 14.4 | 8.06 |
| | | | 18.8 |
| 29 900 | 23 500 | | 18.4 |
| | | | 19.7 |
| | | | 19.2 |

## Stainless ball bearing with solid grease
## Set screw type

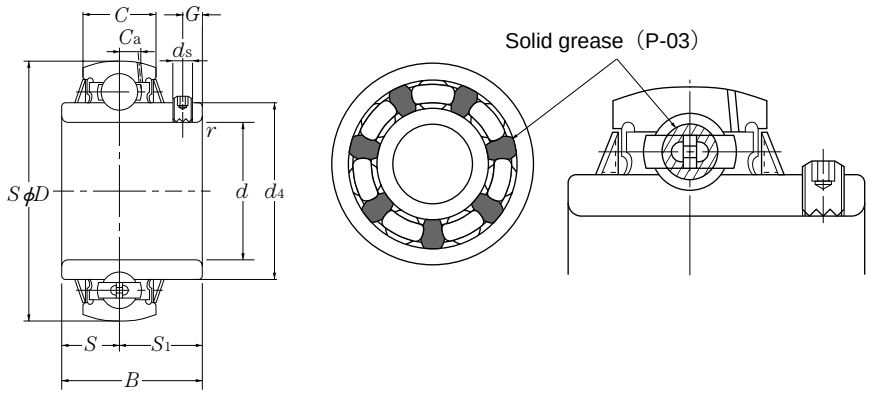


| Shaft dia. mm | Bearing number | Nominal dimensions mm | | | | | | | | | | |
|---|---|---|---|---|---|---|---|---|---|---|---|---|
| | | $d$ | $D$ | $B$ | $C$ | $r_s$ min. | $S$ | $S_1$ | $G$ | $ds$ | $C_a$ | $d_4$ |
| **20** | **F-UC204D1/LP03** | 20 | 47 | 31 | 17 | 1 | 12.7 | 18.3 | 4.5 | M5 × 0.8 | 3.8 | 29.6 |
| **25** | **F-UC205D1/LP03** | 25 | 52 | 34.1 | 17 | 1 | 14.3 | 19.8 | 5 | M5 × 0.8 | 4 | 33.9 |
| **30** | **F-UC206D1/LP03** | 30 | 62 | 38.1 | 19 | 1 | 15.9 | 22.2 | 5 | M6 × 0.75 | 4.9 | 40.8 |
| **35** | **F-UC207D1/LP03** | 35 | 72 | 42.9 | 20 | 1.5 | 17.5 | 25.4 | 6 | M6 × 0.75 | 5.4 | 46.8 |
| **40** | **F-UC208D1/LP03** | 40 | 80 | 49.2 | 21 | 1.5 | 19 | 30.2 | 8 | M8 × 1 | 6 | 53 |
| **45** | **F-UC209D1/LP03** | 45 | 85 | 49.2 | 22 | 1.5 | 19 | 30.2 | 8 | M8 × 1 | 6.1 | 57.5 |
| **50** | **F-UC210D1/LP03** | 50 | 90 | 51.6 | 24 | 1.5 | 19 | 32.6 | 9 | M8 × 1 | 6.1 | 62.4 |

Remarks: 1) The basic dynamic load rating $C_r$ of the bearing is different from a bearing made with standard bearing steel.

| Basic load ratings | | Factor | Mass |
|---|---|---|---|
| N | | | kg |
| dynamic $C_r$ | static $C_{or}$ | $f_0$ | |
| 9 900 | 6 650 | 13.2 | 0.17 |
| 10 800 | 7 850 | 13.9 | 0.20 |
| 15 000 | 11 300 | 13.8 | 0.30 |
| 19 700 | 15 300 | 13.8 | 0.40 |
| 22 400 | 17 800 | 14.0 | 0.60 |
| 25 200 | 20 400 | 14.1 | 0.68 |
| 27 000 | 23 200 | 14.4 | 0.78 |

## Ball bearings
## Set screw type

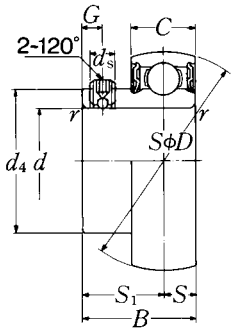


| Shaft dia. mm / inch | Bearing number [1] | Nominal dimensions d | D | B | C | mm rs min. / inch S | S1 | G | ds | d4 |
|---|---|---|---|---|---|---|---|---|---|---|
| **12** | **AS201** | 12 | 40 | 22 | 12 | 0.6 | 6 | 16 | 4.2 | M5 × 0.8 | 24.3 |
| 1/2 | **AS201-008** | 0.5000 | 1.5748 | 0.8661 | 0.4724 | 0.024 | 0.236 | 0.630 | 0.165 | No.10-32UNF | 0.957 |
| **15** | **AS202** | 15 | 40 | 22 | 12 | 0.6 | 6 | 16 | 4.2 | M5 × 0.8 | 24.3 |
| 9/16 | **AS202-009** | 0.5625 | 1.5748 | 0.8661 | 0.4724 | 0.024 | 0.236 | 0.630 | 0.165 | No.10-32UNF | 0.957 |
| 5/8 | **AS202-010** | 0.6250 | | | | | | | | | |
| **17** | **AS203** | 17 | 40 | 22 | 12 | 0.6 | 6 | 16 | 4.2 | M5 × 0.8 | 24.3 |
| 11/16 | **AS203-011** | 0.6875 | 1.5748 | 0.8661 | 0.4724 | 0.024 | 0.236 | 0.630 | 0.165 | No.10-32UNF | 0.957 |
| **20** | **AS204** | 20 | 47 | 25 | 14 | 1 | 7 | 18 | 4.2 | M5 × 0.8 | 29.6 |
| 3/4 | **AS204-012** | 0.7500 | 1.8504 | 0.9843 | 0.5512 | 0.039 | 0.276 | 0.709 | 0.165 | No.10-32UNF | 1.165 |
| **25** | **AS205** | 25 | 52 | 27 | 15 | 1 | 7.5 | 19.5 | 5 | M5 × 0.8 | 33.9 |
| 13/16 | **AS205-013** | 0.8125 | | | | | | | | | |
| 7/8 | **AS205-014** | 0.8750 | 2.0472 | 1.0630 | 0.5906 | 0.039 | 0.295 | 0.768 | 0.197 | No.10-32UNF | 1.335 |
| 15/16 | **AS205-015** | 0.9375 | | | | | | | | | |
| **1** | **AS205-100** | 1.0000 | | | | | | | | | |
| **30** | **AS206** | 30 | 62 | 29 | 16 | 1 | 8 | 21 | 5 | M6 × 0.75 | 40.8 |
| 1 1/16 | **AS206-101** | 1.0625 | | | | | | | | | |
| 1 1/8 | **AS206-102** | 1.1250 | 2.4409 | 1.1417 | 0.6299 | 0.039 | 0.315 | 0.827 | 0.197 | 1/4-28UNF | 1.606 |
| 1 3/16 | **AS206-103** | 1.1875 | | | | | | | | | |
| 1 1/4 | **AS206-104** | 1.2500 | | | | | | | | | |
| **35** | **AS207** | 35 | 72 | 34 | 17 | 1.5 | 8.5 | 25.5 | 6 | M6 × 0.75 | 46.8 |
| 1 1/4 | **AS207-104** | 1.2500 | | | | | | | | | |
| 1 5/16 | **AS207-105** | 1.3125 | 2.8346 | 1.3386 | 0.6693 | 0.059 | 0.335 | 1.004 | 0.236 | 1/4-28UNF | 1.843 |
| 1 3/8 | **AS207-106** | 1.3750 | | | | | | | | | |
| 1 7/16 | **AS207-107** | 1.4375 | | | | | | | | | |
| **40** | **AS208** | 40 | 80 | 38 | 18 | 1.5 | 9 | 29 | 8 | M8 × 1 | 53 |
| 1 1/2 | **AS208-108** | 1.5000 | 3.1496 | 1.4961 | 0.7087 | 0.059 | 0.354 | 1.142 | 0.315 | 5/16-24UNF | 2.087 |
| 1 9/16 | **AS208-109** | 1.5625 | | | | | | | | | |

Remarks: 1) If relubricatable type is needed, please order with suffix "D1".
2) For inch series bearings, the $f_0$ factor for calculating equivalent radial load is the same as the metric series.

| Basic load ratings | | Factor[2)] | Mass |
|---|---|---|---|
| N<br>dynamic<br>$C_r$ | lbf<br>static<br>$C_{or}$ | $f_0$ | kg lb |
| 9 600<br>2 160 | 4 600<br>1 030 | 12.8 | 0.10<br>0.22 |
| 9 600<br>2 160 | 4 600<br>1 030 | 12.8 | 0.09<br>0.21<br>0.20 |
| 9 600<br>2 160 | 4 600<br>1 030 | 12.8 | 0.08<br>0.18 |
| 12 800<br>2 890 | 6 650<br>1 500 | 13.2 | 0.13<br>0.29 |
| 14 000<br>3 150 | 7 850<br>1 770 | 13.9 | 0.16<br>0.42<br>0.40<br>0.38<br>0.35 |
| 19 500<br>4 400 | 11 300<br>2 540 | 13.8 | 0.25<br>0.61<br>0.59<br>0.57<br>0.55 |
| 25 700<br>5 750 | 15 300<br>3 450 | 13.8 | 0.38<br>1.06<br>0.93<br>0.81<br>0.69 |
| 29 100<br>6 550 | 17 800<br>4 000 | 14.0 | 0.51<br>1.15<br>1.06 |

## Ball bearings
## Set screw type

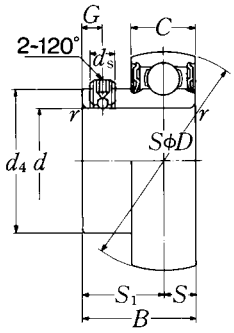


| Shaft dia. mm inch | Bearing number [1] | Nominal dimensions d | D | B | C | mm $r_s$ min. | inch S | $S_1$ | G | ds | $d_4$ |
|---|---|---|---|---|---|---|---|---|---|---|---|
| **45** | **AS209** | 45 | 85 | 40 | 19 | 1.5 | 9.5 | 30.5 | 8 | M8 × 1 | 57.5 |
| **1 5/8** | **AS209-110** | 1.6250 | | | | | | | | | |
| **1 11/16** | **AS209-111** | 1.6875 | 3.3465 | 1.5748 | 0.7480 | 0.059 | 0.374 | 1.201 | 0.315 | 5/16-24UNF | 2.2638 |
| **1 3/4** | **AS209-112** | 1.7500 | | | | | | | | | |
| **50** | **AS210** | 50 | 90 | 42 | 20 | 1.5 | 10 | 32 | 9 | M8X1 | 62.4 |
| **1 13/16** | **AS210-113** | 1.8125 | | | | | | | | | |
| **1 7/8** | **AS210-114** | 1.8750 | 3.5433 | 1.6535 | 0.7874 | 0.059 | 0.394 | 1.260 | 0.354 | 5/16-24UNF | 2.4567 |
| **1 15/16** | **AS210-115** | 1.9375 | | | | | | | | | |
| **2** | **AS210-200** | 2.0000 | | | | | | | | | |

Remarks: 1) If relubricatable type is needed, please order with suffix "D1".
2) For inch series bearings, the $f_0$ factor for calculating equivalent radial load is the same as the metric series.

| Basic load ratings | | Factor[2)] | Mass |
|---|---|---|---|
| N | lbf | | kg lb |
| dynamic $C_r$ | static $C_{or}$ | $f_0$ | |
| 32 500 | 20 400 | 14.1 | 0.55 |
| | | | 1.39 |
| 7 350 | 4 600 | | 1.32 |
| | | | 1.23 |
| 35 000 | 23 200 | 14.4 | 0.65 |
| | | | 1.65 |
| 7 900 | 5 200 | | 1.57 |
| | | | 1.48 |
| | | | 1.39 |

## Ball bearings
## Set screw type

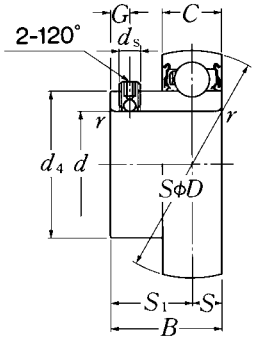


| Shaft dia. mm / inch | Bearing number [1] | Nominal dimensions $d$ | $D$ | $B$ | $C$ | mm $r_s$ min. / inch $S$ | $S_1$ | $G$ | $ds$ | $d_4$ |
|---|---|---|---|---|---|---|---|---|---|---|
| **12** | **AR201** | 12 | 40 | 22.5 | 13 | 0.6 | 6.5 | 16 | 5 | M6 × 0.75 | 24.4 |
| 1/2 | **AR201-008** | 0.5000 | 1.5748 | 0.8858 | 0.5118 | 0.024 | 0.256 | 0.630 | 0.197 | 1/4-28UNF | 0.9606 |
| **15** | **AR202** | 15 | 40 | 22.5 | 13 | 0.6 | 6.5 | 16 | 5 | M6 × 0.75 | 24.4 |
| 9/16 | **AR202-009** | 0.5625 | 1.5748 | 0.8858 | 0.5118 | 0.024 | 0.256 | 0.630 | 0.197 | 1/4-28UNF | 0.9606 |
| 5/8 | **AR202-010** | 0.6250 | | | | | | | | | |
| **17** | **AR203** | 17 | 40 | 22.5 | 13 | 0.6 | 6.5 | 16 | 5 | M6 × 0.75 | 24.4 |
| 11/16 | **AR203-011** | 0.6875 | 1.5748 | 0.8858 | 0.5118 | 0.024 | 0.256 | 0.630 | 0.197 | 1/4-28UNF | 0.9606 |
| **20** | **AR204** | 20 | 47 | 25.5 | 15 | 1 | 7.5 | 18 | 5 | M6 × 0.75 | 29.6 |
| 3/4 | **AR204-012** | 0.7500 | 1.8504 | 1.0039 | 0.5906 | 0.039 | 0.295 | 0.709 | 0.197 | 1/4-28UNF | 1.1654 |
| **25** | **AR205** | 25 | 52 | 27 | 15 | 1 | 7.5 | 19.5 | 5 | M6 × 0.75 | 33.9 |
| 13/16 | **AR205-013** | 0.8125 | | | | | | | | | |
| 7/8 | **AR205-014** | 0.8750 | 2.0472 | 1.0630 | 0.5906 | 0.039 | 0.295 | 0.768 | 0.197 | 1/4-28UNF | 1.3346 |
| 15/16 | **AR205-015** | 0.9375 | | | | | | | | | |
| **1** | **AR205-100** | 1.0000 | | | | | | | | | |
| **30** | **AR206** | 30 | 62 | 30 | 18 | 1 | 9 | 21 | 5 | M6 × 0.75 | 40.8 |
| 1 1/16 | **AR206-101** | 1.0625 | | | | | | | | | |
| 1 1/8 | **AR206-102** | 1.1250 | 2.4409 | 1.1811 | 0.7087 | 0.039 | 0.354 | 0.827 | 0.197 | 1/4-28UNF | 1.6063 |
| 1 3/16 | **AR206-103** | 1.1875 | | | | | | | | | |
| 1 1/4 | **AR206-104** | 1.2500 | | | | | | | | | |
| **35** | **AR207** | 35 | 72 | 35 | 19 | 1.5 | 9.5 | 25.5 | 6 | M6 × 0.75 | 46.8 |
| 1 1/4 | **AR207-104** | 1.2500 | | | | | | | | | |
| 1 5/16 | **AR207-105** | 1.3125 | 2.8346 | 1.3780 | 0.7480 | 0.059 | 0.374 | 1.004 | 0.236 | 1/4-28UNF | 1.8425 |
| 1 3/8 | **AR207-106** | 1.3750 | | | | | | | | | |
| 1 7/16 | **AR207-107** | 1.4375 | | | | | | | | | |
| **40** | **AR208** | 40 | 80 | 40 | 22 | 1.5 | 11 | 29 | 8 | M8 × 1 | 53 |
| 1 1/2 | **AR208-108** | 1.5000 | 3.1496 | 1.5748 | 0.8661 | 0.059 | 0.433 | 1.142 | 0.315 | 5/16-24UNF | 2.0866 |
| 1 9/16 | **AR208-109** | 1.5625 | | | | | | | | | |

Remarks: 1) If relubricatable type is needed, please order with suffix "D1".
2) For inch series bearings, the $f_0$ factor for calculating equivalent radial load is the same as the metric series.

| Basic load ratings | | Factor[2)] | Mass |
|---|---|---|---|
| N<br>dynamic<br>$C_r$ | lbf<br>static<br>$C_{or}$ | $f_0$ | kg lb |
| 9 600<br>2 160 | 4 600<br>1 030 | 12.8 | 0.11<br>0.24 |
| 9 600<br>2 160 | 4 600<br>1 030 | 12.8 | 0.10<br>0.23<br>0.22 |
| 9 600<br>2 160 | 4 600<br>1 030 | 12.8 | 0.09<br>0.20 |
| 12 800<br>2 890 | 6 650<br>1 500 | 13.2 | 0.14<br>0.31 |
| 14 000<br>3 150 | 7 850<br>1 770 | 13.9 | 0.17<br>0.44<br>0.42<br>0.40<br>0.37 |
| 19 500<br>4 400 | 11 300<br>2 540 | 13.8 | 0.26<br>0.63<br>0.61<br>0.59<br>0.57 |
| 25 700<br>5 750 | 15 300<br>3 450 | 13.8 | 0.39<br>1.10<br>0.97<br>0.85<br>0.73 |
| 29 100<br>6 550 | 17 800<br>4 000 | 14.0 | 0.54<br>1.24<br>1.15 |

## Ball bearings
## Set screw type

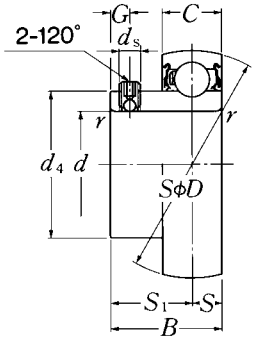


| Shaft dia. mm / inch | Bearing number [1] | Nominal dimensions d | D | B | C | mm $r_s$ min. | inch S | $S_1$ | G | ds | $d_4$ |
|---|---|---|---|---|---|---|---|---|---|---|---|
| **45** | **AR209** | 45 | 85 | 41.5 | 22 | 1.5 | 11 | 30.5 | 8 | M8X1 | 57.5 |
| **1 5/8** | **AR209-110** | 1.6250 | | | | | | | | | |
| **1 11/16** | **AR209-111** | 1.6875 | 3.3465 | 1.6339 | 0.8661 | 0.059 | 0.433 | 1.201 | 0.315 | 5/16-24UNF | 2.2638 |
| **1 3/4** | **AR209-112** | 1.7500 | | | | | | | | | |
| **50** | **AR210** | 50 | 90 | 43 | 22 | 1.5 | 11 | 32 | 9 | M8X1 | 62.4 |
| **1 13/16** | **AR210-113** | 1.8125 | | | | | | | | | |
| **1 7/8** | **AR210-114** | 1.8750 | 3.5433 | 1.6929 | 0.8661 | 0.059 | 0.433 | 1.260 | 0.354 | 5/16-24UNF | 2.4567 |
| **1 15/16** | **AR210-115** | 1.9375 | | | | | | | | | |
| **2** | **AR210-200** | 2.0000 | | | | | | | | | |

Remarks: 1) If relubricatable type is needed, please order with suffix "D1".
2) For inch series bearings, the $f_0$ factor for calculating equivalent radial load is the same as the metric series.

| Basic load ratings | | Factor[2)] | Mass |
|---|---|---|---|
| N | lbf | | kg lb |
| dynamic $C_r$ | static $C_{or}$ | $f_0$ | |
| 32 500 | 20 400 | 14.1 | 0.61 |
| | | | 1.54 |
| 7 350 | 4 600 | | 1.46 |
| | | | 1.39 |
| 35 000 | 23 200 | 14.4 | 0.70 |
| | | | 1.76 |
| 7 900 | 5 200 | | 1.68 |
| | | | 1.59 |
| | | | 1.50 |

## Ball bearings
## Eccentric locking collar type

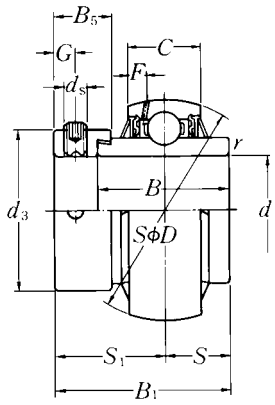


| Shaft dia. mm / inch | Bearing number | Nominal dimensions d | D | B1 | B | C | rs min. (mm / inch) | S | S1 | G | ds | d3 |
|---|---|---|---|---|---|---|---|---|---|---|---|---|
| **20** | **UEL204D1W3** | 20 | 47 | 43.7 | 34.2 | 17 | 1 | 17.1 | 26.6 | 4.8 | M6 × 0.75 | 33 |
| 3/4 | **UEL204-012D1W3** | 0.7500 | 1.8504 | 1.720 | 1.3465 | 0.6693 | 0.039 | 0.673 | 1.047 | 0.189 | 1/4-28UNF | 1.299 |
| **25** | **UEL205D1W3** | 25 | 52 | 44.4 | 34.9 | 17 | 1 | 17.45 | 26.9 | 4.8 | M6 × 0.75 | 38 |
| 13/16 | **UEL205-013D1W3** | 0.8125 | | | | | | | | | | |
| 7/8 | **UEL205-014D1W3** | 0.8750 | 2.0472 | 1.748 | 1.3740 | 0.6693 | 0.039 | 0.687 | 1.059 | 0.189 | 1/4-28UNF | 1.496 |
| 15/16 | **UEL205-015D1W3** | 0.9375 | | | | | | | | | | |
| **1** | **UEL205-100D1W3** | 1.0000 | | | | | | | | | | |
| **30** | **UEL206D1W3** | 30 | 62 | 48.4 | 36.5 | 19 | 1 | 18.25 | 30.1 | 6 | M8 × 1 | 44.5 |
| 1 1/16 | **UEL206-101D1W3** | 1.0625 | | | | | | | | | | |
| 1 1/8 | **UEL206-102D1W3** | 1.1250 | 2.4409 | 1.906 | 1.4370 | 0.7480 | 0.039 | 0.719 | 1.185 | 0.236 | 5/16-24UNF | 1.752 |
| 1 3/16 | **UEL206-103D1W3** | 1.1875 | | | | | | | | | | |
| 1 1/4 | **UEL206-104D1W3** | 1.2500 | | | | | | | | | | |
| **35** | **UEL207D1W3** | 35 | 72 | 51.1 | 37.6 | 20 | 1.5 | 18.8 | 32.3 | 6.8 | M10 × 1.25 | 55.5 |
| 1 1/4 | **UEL207-104D1W3** | 1.2500 | | | | | | | | | | |
| 1 5/16 | **UEL207-105D1W3** | 1.3125 | 2.8346 | 2.012 | 1.4803 | 0.7874 | 0.059 | 0.740 | 1.272 | 0.268 | 3/8-24UNF | 2.185 |
| 1 3/8 | **UEL207-106D1W3** | 1.3750 | | | | | | | | | | |
| 1 7/16 | **UEL207-107D1W3** | 1.4375 | | | | | | | | | | |
| **40** | **UEL208D1W3** | 40 | 80 | 56.3 | 42.8 | 21 | 1.5 | 21.4 | 34.9 | 6.8 | M10 × 1.25 | 60 |
| 1 1/2 | **UEL208-108D1W3** | 1.5000 | 3.1496 | 2.217 | 1.6850 | 0.8268 | 0.059 | 0.843 | 1.374 | 0.268 | 3/8-24UNF | 2.362 |
| 1 9/16 | **UEL208-109D1W3** | 1.5625 | | | | | | | | | | |
| **45** | **UEL209D1W3** | 45 | 85 | 56.3 | 42.8 | 22 | 1.5 | 21.4 | 34.9 | 6.8 | M10 × 1.25 | 63.5 |
| 1 5/8 | **UEL209-110D1W3** | 1.6250 | | | | | | | | | | |
| 1 11/16 | **UEL209-111D1W3** | 1.6875 | 3.3465 | 2.217 | 1.6850 | 0.8661 | 0.059 | 0.843 | 1.374 | 0.268 | 3/8-24UNF | 2.500 |
| 1 3/4 | **UEL209-112D1W3** | 1.7500 | | | | | | | | | | |
| **50** | **UEL210D1W3** | 50 | 90 | 62.7 | 49.2 | 24 | 1.5 | 24.6 | 38.1 | 6.8 | M10 × 1.25 | 69.5 |
| 1 13/16 | **UEL210-113D1W3** | 1.8125 | | | | | | | | | | |
| 1 7/8 | **UEL210-114D1W3** | 1.8750 | 3.5433 | 2.469 | 1.9370 | 0.9449 | 0.059 | 0.969 | 1.500 | 0.268 | 3/8-24UNF | 2.736 |
| 1 15/16 | **UEL210-115D1W3** | 1.9375 | | | | | | | | | | |
| **2** | **UEL210-200D1W3** | 2.0000 | | | | | | | | | | |

Remarks: 1) For inch series bearings, the $f_0$ factor for calculating equivalent radial load is the same as the metric series.

| Nominal dimensions | | Basic load ratings | | Factor[1)] | Mass |
|---|---|---|---|---|---|
| mm | inch | N | lbf | | kg lb |
| | | dynamic | static | | |
| $B_5$ | $F$ | $C_r$ | $C_{or}$ | $f_0$ | |
| 13.5 | 4.7 | 12 800 | 6 650 | 13.2 | 0.23 |
| 0.531 | 0.185 | 2 890 | 1 500 | | 0.45 |
| 13.5 | 4.5 | 14 000 | 7 850 | 13.9 | 0.27 |
| | | | | | 0.61 |
| 0.531 | 0.177 | 3 150 | 1 770 | | 0.58 |
| | | | | | 0.55 |
| | | | | | 0.51 |
| 15.9 | 4.6 | 19 500 | 11 300 | 13.8 | 0.45 |
| | | | | | 0.94 |
| 0.626 | 0.181 | 4 400 | 2 540 | | 0.89 |
| | | | | | 0.84 |
| | | | | | 0.80 |
| 17.5 | 4.6 | 25 700 | 15 300 | 13.8 | 0.60 |
| | | | | | 1.45 |
| 0.689 | 0.181 | 5 750 | 3 450 | | 1.40 |
| | | | | | 1.35 |
| | | | | | 1.28 |
| 18.3 | 4.5 | 29 100 | 17 800 | 14.0 | 0.78 |
| 0.720 | 0.177 | 6 550 | 4 000 | | 1.90 |
| | | | | | 1.82 |
| 18.3 | 4.9 | 32 500 | 20 400 | 14.1 | 0.80 |
| | | | | | 2.05 |
| 0.720 | 0.193 | 7 350 | 4 600 | | 1.97 |
| | | | | | 1.88 |
| 18.3 | 5.9 | 35 000 | 23 200 | 14.4 | 0.96 |
| | | | | | 2.46 |
| 0.720 | 0.232 | 7 900 | 5 200 | | 2.36 |
| | | | | | 2.25 |
| | | | | | 2.09 |

## Ball bearings
## Eccentric locking collar type

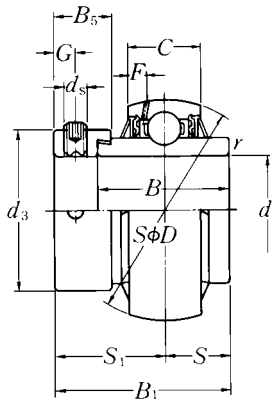


| Shaft dia. mm / inch | Bearing number | Nominal dimensions d | D | B1 | B | C | rs min. (mm) | S (inch) | S1 | G | ds | d3 |
|---|---|---|---|---|---|---|---|---|---|---|---|---|
| 55 | UEL211D1W3 | 55 | 100 | 71.4 | 55.5 | 25 | 2 | 27.75 | 43.6 | 8 | M10 × 1.25 | 76 |
| 2 | UEL211-200D1W3 | 2.0000 | | | | | | | | | | |
| 2 1/16 | UEL211-201D1W3 | 2.0625 | 3.9370 | 2.811 | 2.1850 | 0.9843 | 0.079 | 1.093 | 1.717 | 0.315 | 3/8-24UNF | 2.992 |
| 2 1/8 | UEL211-202D1W3 | 2.1250 | | | | | | | | | | |
| 2 3/16 | UEL211-203D1W3 | 2.1875 | | | | | | | | | | |
| 60 | UEL212D1W3 | 60 | 110 | 77.8 | 61.9 | 27 | 2 | 30.95 | 46.8 | 8 | M10 × 1.25 | 84 |
| 2 1/4 | UEL212-204D1W3 | 2.2500 | | | | | | | | | | |
| 2 5/16 | UEL212-205D1W3 | 2.3125 | 4.3307 | 3.063 | 2.4370 | 1.0630 | 0.079 | 1.219 | 1.843 | 0.315 | 3/8-24UNF | 3.307 |
| 2 3/8 | UEL212-206D1W3 | 2.3750 | | | | | | | | | | |
| 2 7/16 | UEL212-207D1W3 | 2.4375 | | | | | | | | | | |
| 65 | UEL213D1W3 | 65 | 120 | 85.7 | 68.3 | 32 | 2 | 34.15 | 51.55 | 8.7 | M10 × 1.25 | 97 |
| 2 1/2 | UEL213-208D1W3 | 2.5000 | 4.7244 | 3.374 | 2.6890 | 1.2598 | 0.079 | 1.344 | 2.030 | 0.343 | 3/8-24UNF | 3.819 |
| 2 9/16 | UEL213-209D1W3 | 2.5625 | | | | | | | | | | |
| 70 | UEL214D1W3 | 70 | 125 | 85.7 | 68.3 | 33 | 2 | 34.15 | 51.55 | 8.7 | M10 × 1.25 | 97 |
| 2 5/8 | UEL214-210D1W3 | 2.6250 | | | | | | | | | | |
| 2 11/16 | UEL214-211D1W3 | 2.6875 | 4.9213 | 3.374 | 2.6890 | 1.2992 | 0.079 | 1.344 | 2.030 | 0.343 | 3/8-24UNF | 3.819 |
| 2 3/4 | UEL214-212D1W3 | 2.7500 | | | | | | | | | | |
| 75 | UEL215D1W3 | 75 | 130 | 92 | 74.6 | 34 | 2 | 37.3 | 54.7 | 8.7 | M10 × 1.25 | 102 |
| 2 13/16 | UEL215-213D1W3 | 2.8125 | | | | | | | | | | |
| 2 7/8 | UEL215-214D1W3 | 2.8750 | 5.1181 | 3.622 | 2.9370 | 1.3386 | 0.079 | 1.469 | 2.154 | 0.343 | 3/8-24UNF | 4.016 |
| 2 15/16 | UEL215-215D1W3 | 2.9375 | | | | | | | | | | |
| 3 | UEL215-300D1W3 | 3.0000 | | | | | | | | | | |

Remarks: 1) For inch series bearings, the $f_0$ factor for calculating equivalent radial load is the same as the metric series.

| Nominal dimensions | | Basic load ratings | | Factor[1)] | Mass |
|---|---|---|---|---|---|
| mm | inch | N | lbf | | kg lb |
| | | dynamic | static | | |
| $B_5$ | $F$ | $C_r$ | $C_{or}$ | $f_0$ | |
| 20.7 | 6.0 | 43 500 | 29 200 | 14.3 | 1.32 |
| 0.815 | 0.236 | 9 750 | 6 550 | | 3.28 |
| | | | | | 3.12 |
| | | | | | 3.02 |
| | | | | | 2.90 |
| 22.3 | 6.2 | 52 500 | 36 000 | 14.3 | 1.79 |
| 0.878 | 0.244 | 11 800 | 8 150 | | 4.38 |
| | | | | | 4.22 |
| | | | | | 4.05 |
| | | | | | 3.88 |
| 23.8 | 8.7 | 57 500 | 40 000 | 14.4 | 2.54 |
| 0.937 | 0.343 | 12 900 | 9 000 | | 5.47 |
| | | | | | 5.30 |
| 23.8 | 8.8 | 62 000 | 44 000 | 14.5 | 2.47 |
| 0.937 | 0.346 | 14 000 | 9 900 | | 5.67 |
| | | | | | 5.45 |
| | | | | | 5.18 |
| 23.8 | 9.0 | 66 000 | 49 500 | 14.7 | 2.68 |
| 0.937 | 0.354 | 14 900 | 11 100 | | 6.39 |
| | | | | | 6.15 |
| | | | | | 5.91 |
| | | | | | 5.60 |

## Ball bearings
## Eccentric locking collar type

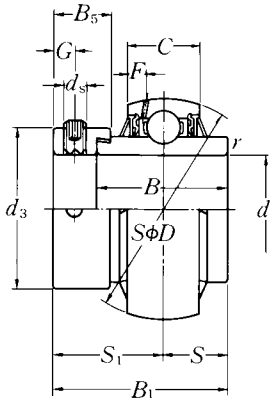


| Shaft dia. mm / inch | Bearing number | Nominal dimensions d | D | B1 | B | C | rs min. (mm / inch) | S | S1 | G | ds | d3 |
|---|---|---|---|---|---|---|---|---|---|---|---|---|
| 25 | UEL305D1W3 | 25 | 62 | 46.8 | 34.9 | 20 | 1.5 | 16.7 | 30.1 | 6 | M8 × 1 | 42.8 |
| 13/16 | UEL305-013D1W3 | 0.8125 | | | | | | | | | | |
| 7/8 | UEL305-014D1W3 | 0.8750 | 2.4409 | 1.843 | 1.3740 | 0.7874 | 0.059 | 0.657 | 1.185 | 0.236 | 5/16-24UNF | 1.685 |
| 15/16 | UEL305-015D1W3 | 0.9375 | | | | | | | | | | |
| 1 | UEL305-100D1W3 | 1.0000 | | | | | | | | | | |
| 30 | UEL306D1W3 | 30 | 72 | 50 | 36.5 | 23 | 1.5 | 17.5 | 32.5 | 6.7 | M8 × 1 | 50 |
| 1 1/16 | UEL306-101D1W3 | 1.0625 | | | | | | | | | | |
| 1 1/8 | UEL306-102D1W3 | 1.1250 | 2.8346 | 1.969 | 1.4370 | 0.9055 | 0.059 | 0.689 | 1.280 | 0.264 | 5/16-24UNF | 1.969 |
| 1 3/16 | UEL306-103D1W3 | 1.1875 | | | | | | | | | | |
| 35 | UEL307D1W3 | 35 | 80 | 51.6 | 38.1 | 25 | 2 | 18.3 | 33.3 | 6.7 | M8 × 1 | 55 |
| 1 1/4 | UEL307-104D1W3 | 1.2500 | | | | | | | | | | |
| 1 5/16 | UEL307-105D1W3 | 1.3125 | 3.1496 | 2.031 | 1.5000 | 0.9843 | 0.079 | 0.720 | 1.311 | 0.264 | 5/16-24UNF | 2.165 |
| 1 3/8 | UEL307-106D1W3 | 1.3750 | | | | | | | | | | |
| 1 7/16 | UEL307-107D1W3 | 1.4375 | | | | | | | | | | |
| 40 | UEL308D1W3 | 40 | 90 | 57.1 | 41.3 | 27 | 2 | 19.8 | 37.3 | 8 | M10 × 1.25 | 63.5 |
| 1 1/2 | UEL308-108D1W3 | 1.5000 | 3.5433 | 2.248 | 1.6260 | 1.0630 | 0.079 | 0.780 | 1.469 | 0.315 | 3/8-24UNF | 2.500 |
| 1 9/16 | UEL308-109D1W3 | 1.5625 | | | | | | | | | | |
| 45 | UEL309D1W3 | 45 | 100 | 58.7 | 42.9 | 29 | 2 | 19.8 | 38.9 | 8 | M10 × 1.25 | 70 |
| 1 5/8 | UEL309-110D1W3 | 1.6250 | | | | | | | | | | |
| 1 11/16 | UEL309-111D1W3 | 1.6875 | 3.9370 | 2.311 | 1.6890 | 1.1417 | 0.079 | 0.780 | 1.531 | 0.315 | 3/8-24UNF | 2.756 |
| 1 3/4 | UEL309-112D1W3 | 1.7500 | | | | | | | | | | |
| 50 | UEL310D1W3 | 50 | 110 | 66.6 | 49.2 | 32 | 2.5 | 24.6 | 42 | 8.7 | M10 × 1.25 | 76.2 |
| 1 13/16 | UEL310-113D1W3 | 1.8125 | | | | | | | | | | |
| 1 7/8 | UEL310-114D1W3 | 1.8750 | 4.3307 | 2.622 | 1.9370 | 1.2598 | 0.098 | 0.969 | 1.654 | 0.343 | 3/8-24UNF | 3.000 |
| 1 15/16 | UEL310-115D1W3 | 1.9375 | | | | | | | | | | |
| 55 | UEL311D1W3 | 55 | 120 | 73 | 55.6 | 34 | 2.5 | 27.8 | 45.2 | 8.7 | M10 × 1.25 | 83 |
| 2 | UEL311-200D1W3 | 2.0000 | | | | | | | | | | |
| 2 1/16 | UEL311-201D1W3 | 2.0625 | 4.7244 | 2.874 | 2.1890 | 1.3386 | 0.098 | 1.094 | 1.780 | 0.343 | 3/8-24UNF | 3.268 |
| 2 1/8 | UEL311-202D1W3 | 2.1250 | | | | | | | | | | |
| 2 3/16 | UEL311-203D1W3 | 2.1875 | | | | | | | | | | |

Remarks: 1) For inch series bearings, the $f_0$ factor for calculating equivalent radial load is the same as the metric series.

| Nominal dimensions | | Basic load ratings | | Factor[1)] | Mass |
|---|---|---|---|---|---|
| mm | inch | N | lbf | | kg lb |
| | | dynamic | static | | |
| $B_5$ | $F$ | $C_r$ | $C_{or}$ | $f_0$ | |
| 15.9 | 5.0 | 21 200 | 10 900 | 12.6 | 0.43 |
| 0.626 | 0.197 | 4 750 | 2 460 | | 1.09<br>1.05<br>1.01<br>0.96 |
| 17.5 | 5.9 | 26 700 | 15 000 | 13.3 | 0.69 |
| 0.689 | 0.232 | 6 000 | 3 400 | | 1.57<br>1.51<br>1.45 |
| 17.5 | 6.8 | 33 500 | 19 100 | 13.1 | 0.78 |
| 0.689 | 0.268 | 7 500 | 4 300 | | 1.92<br>1.84<br>1.77<br>1.69 |
| 20.6 | 7.4 | 40 500 | 24 000 | 13.2 | 1.10 |
| 0.811 | 0.291 | 9 150 | 5 400 | | 2.58<br>2.49 |
| 20.6 | 7.4 | 53 000 | 32 000 | 13.1 | 1.40 |
| 0.811 | 0.291 | 11 900 | 7 200 | | 3.36<br>3.26<br>3.15 |
| 22.2 | 8.1 | 62 000 | 38 500 | 13.2 | 1.84 |
| 0.874 | 0.319 | 13 900 | 8 600 | | 4.40<br>4.29<br>4.15 |
| 22.2 | 8.5 | 71 500 | 45 000 | 13.2 | 2.36 |
| 0.874 | 0.335 | 16 100 | 10 100 | | 5.58<br>5.39<br>5.25<br>5.08 |

## Ball bearings
## Eccentric locking collar type

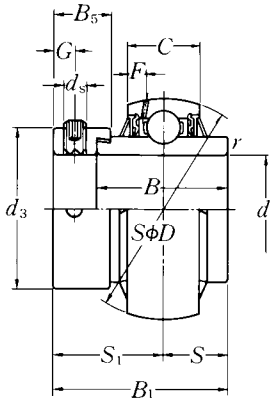


| Shaft dia. mm / inch | Bearing number | Nominal dimensions mm / inch: d | D | B1 | B | C | rs min. | S | S1 | G | ds | d3 |
|---|---|---|---|---|---|---|---|---|---|---|---|---|
| 60 | UEL312D1W3 | 60 | 130 | 79.4 | 61.9 | 36 | 2.5 | 30.95 | 48.45 | 8.7 | M10 × 1.25 | 89 |
| 2 1/4 | UEL312-204D1W3 | 2.2500 | | | | | | | | | | |
| 2 5/16 | UEL312-205D1W3 | 2.3125 | 5.1181 | 3.126 | 2.4370 | 1.4173 | 0.098 | 1.219 | 1.907 | 0.343 | 3/8-24UNF | 3.504 |
| 2 3/8 | UEL312-206D1W3 | 2.3750 | | | | | | | | | | |
| 2 7/16 | UEL312-207D1W3 | 2.4375 | | | | | | | | | | |
| 65 | UEL313D1W3 | 65 | 140 | 85.7 | 65.1 | 39 | 2.5 | 32.55 | 53.15 | 10.3 | M12 × 1.5 | 97 |
| 2 1/2 | UEL313-208D1W3 | 2.5000 | 5.5118 | 3.374 | 2.5630 | 1.5354 | 0.098 | 1.281 | 2.093 | 0.406 | 1/2-20UNF | 3.819 |
| 2 9/16 | UEL313-209D1W3 | 2.5625 | | | | | | | | | | |
| 70 | UEL314D1W3 | 70 | 150 | 92.1 | 68.3 | 41 | 2.5 | 34.15 | 57.95 | 10.3 | M12 × 1.5 | 102 |
| 2 5/8 | UEL314-210D1W3 | 2.6250 | | | | | | | | | | |
| 2 11/16 | UEL314-211D1W3 | 2.6875 | 5.9055 | 3.626 | 2.6890 | 1.6142 | 0.098 | 1.344 | 2.281 | 0.406 | 1/2-20UNF | 4.016 |
| 2 3/4 | UEL314-212D1W3 | 2.7500 | | | | | | | | | | |
| 75 | UEL315D1W3 | 75 | 160 | 100 | 74.6 | 43 | 2.5 | 37.3 | 62.7 | 12.7 | M16 × 1.5 | 113 |
| 2 13/16 | UEL315-213D1W3 | 2.8125 | | | | | | | | | | |
| 2 7/8 | UEL315-214D1W3 | 2.8750 | 6.2992 | 3.937 | 2.9370 | 1.6929 | 0.098 | 1.469 | 2.469 | 0.500 | 5/8-18UNF | 4.449 |
| 2 15/16 | UEL315-215D1W3 | 2.9375 | | | | | | | | | | |
| 3 | UEL315-300D1W3 | 3.0000 | | | | | | | | | | |
| 80 | UEL316D1W3 | 80 | 170 | 106.4 | 81 | 45 | 2.5 | 40.5 | 65.9 | 12.7 | M16 × 1.5 | 119 |
| 3 1/16 | UEL316-301D1W3 | 3.0625 | | | | | | | | | | |
| 3 1/8 | UEL316-302D1W3 | 3.1250 | 6.6929 | 4.189 | 3.1890 | 1.7717 | 0.098 | 1.594 | 2.594 | 0.500 | 5/8-18UNF | 4.685 |
| 3 3/16 | UEL316-303D1W3 | 3.1875 | | | | | | | | | | |
| 85 | UEL317D1W3 | 85 | 180 | 109.5 | 84.1 | 47 | 3 | 42.05 | 67.45 | 12.7 | M16 × 1.5 | 127 |
| 3 1/4 | UEL317-304D1W3 | 3.2500 | | | | | | | | | | |
| 3 5/16 | UEL317-305D1W3 | 3.3125 | 7.0866 | 4.311 | 3.3110 | 1.8504 | 0.118 | 1.656 | 2.656 | 0.500 | 5/8-18UNF | 5.000 |
| 3 7/16 | UEL317-307D1W3 | 3.4375 | | | | | | | | | | |
| 90 | UEL318D1W3 | 90 | 190 | 115.9 | 87.3 | 49 | 3 | 43.65 | 72.25 | 14.3 | M20 × 1.5 | 133 |
| 3 7/16 | UEL318-307D1W3 | 3.4375 | 7.4803 | 4.563 | 3.4370 | 1.9291 | 0.118 | 1.719 | 2.844 | 0.563 | 3/4-16UNF | 5.236 |
| 3 1/2 | UEL318-308D1W3 | 3.5000 | | | | | | | | | | |
| 95 | UEL319D1W3 | 95 | 200 | 122.3 | 93.7 | 51 | 3 | 38.9 | 83.4 | 14.3 | M20 × 1.5 | 140 |
| 3 5/8 | UEL319-310D1W3 | 3.6250 | | | | | | | | | | |
| 3 11/16 | UEL319-311D1W3 | 3.6875 | 7.8740 | 4.815 | 3.6890 | 2.0079 | 0.118 | 1.531 | 3.283 | 0.563 | 3/4-16UNF | 5.512 |
| 3 3/4 | UEL319-312D1W3 | 3.7500 | | | | | | | | | | |

Remarks: 1) For inch series bearings, the $f_0$ factor for calculating equivalent radial load is the same as the metric series.

| Nominal dimensions | | Basic load ratings | | Factor[1)] | Mass |
|---|---|---|---|---|---|
| mm | inch | N | lbf | | kg lb |
| | | dynamic | static | | |
| $B_5$ | $F$ | $C_r$ | $C_{or}$ | $f_0$ | |
| 23.9 | 9.0 | 82 000 | 52 000 | 13.2 | 2.94 |
| 0.941 | 0.354 | 18 400 | 11 700 | | 6.80<br>6.65<br>6.48<br>6.19 |
| 27 | 10.1 | 92 500 | 60 000 | 13.2 | 3.67 |
| 1.063 | 0.398 | 20 800 | 13 400 | | 8.49<br>8.27 |
| 30.2 | 10.5 | 104 000 | 68 000 | 13.2 | 4.40 |
| 1.189 | 0.413 | 23 400 | 15 300 | | 10.4<br>10.2<br>9.96 |
| 31.8 | 11.0 | 113 000 | 77 000 | 13.2 | 5.34 |
| 1.252 | 0.433 | 25 500 | 17 400 | | 13.2<br>12.9<br>12.7<br>12.5 |
| 31.8 | 11.4 | 123 000 | 86 500 | 13.3 | 6.70 |
| 1.252 | 0.449 | 27 600 | 19 500 | | 14.9<br>14.8<br>14.6 |
| 31.8 | 12.0 | 133 000 | 97 000 | 13.3 | 8.00 |
| 1.252 | 0.472 | 29 800 | 21 800 | | 18.0<br>17.7<br>17.0 |
| 36.5 | 12.3 | 143 000 | 107 000 | 13.3 | 9.10 |
| 1.437 | 0.484 | 32 000 | 24 100 | | 20.7<br>20.2 |
| 36.5 | 12.8 | 153 000 | 119 000 | 13.3 | 10.4 |
| 1.437 | 0.504 | 34 500 | 26 600 | | 23.4<br>23.0<br>22.6 |

## Ball bearings
## Eccentric locking collar type

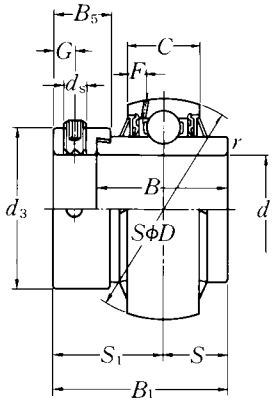


| Shaft dia. mm / inch | Bearing number | Nominal dimensions mm / inch: d | D | B1 | B | C | rs min. | S | S1 | G | ds | d3 |
|---|---|---|---|---|---|---|---|---|---|---|---|---|
| **100** | **UEL320D1W3** | 100 | 215 | 128.6 | 100 | 55 | 3 | 50 | 78.6 | 14.3 | M20 × 1.5 | 146 |
| **3 13/16** | **UEL320-313D1W3** | 3.8125 | | | | | | | | | | |
| **3 7/8** | **UEL320-314D1W3** | 3.8750 | 8.4646 | 5.063 | 3.9370 | 2.1654 | 0.118 | 1.969 | 3.094 | 0.563 | 3/4-16UNF | 5.748 |
| **3 15/16** | **UEL320-315D1W3** | 3.9375 | | | | | | | | | | |
| **4** | **UEL320-400D1W3** | 4.0000 | | | | | | | | | | |
| **105** | **UEL321D1W3** | 105 | 225 | 139.7 | 104.8 | 57 | 3 | 48.4 | 91.3 | 17.5 | M20 × 1.5 | 157 |
| **110** | **UEL322D1W3** | 110 | 240 | 141.3 | 106.4 | 59 | 3 | 49.2 | 92.1 | 17.5 | M20 × 1.5 | 168 |

Remarks: 1) For inch series bearings, the $f_0$ factor for calculating equivalent radial load is the same as the metric series.

| Nominal dimensions | | Basic load ratings | | Factor[1)] | Mass |
|---|---|---|---|---|---|
| mm | inch | N | lbf | | kg lb |
| | | dynamic | static | | |
| $B_5$ | $F$ | $C_r$ | $C_{or}$ | $f_0$ | |
| 36.5 | 13.5 | 173 000 | 141 000 | 13.2 | 13.0<br>28.5<br>28.0<br>27.6<br>27.0 |
| 1.437 | 0.531 | 39 000 | 31 500 | | |
| 42.8 | 13.9 | 184 000 | 153 000 | 13.2 | 14.6 |
| 42.8 | 13.9 | 205 000 | 179 000 | 13.1 | 17.2 |

## Ball bearings
## Eccentric locking collar type

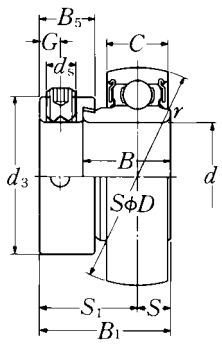


| Shaft dia. mm / inch | Bearing number 1) | Nominal dimensions d | D | B1 | B | C | rs min. (mm / inch) | S | S1 | G | ds | d3 |
|---|---|---|---|---|---|---|---|---|---|---|---|---|
| 12 | AEL201W3 | 12 | 40 | 28.6 | 19 | 12 | 0.6 | 6.5 | 22.1 | 4.8 | M6 × 0.75 | 29 |
| 1/2 | AEL201-008W3 | 0.5000 | 1.5748 | 1.126 | 0.7480 | 0.4724 | 0.024 | 0.256 | 0.870 | 0.189 | 1/4-28UNF | 1.142 |
| 15 | AEL202W3 | 15 | 40 | 28.6 | 19 | 12 | 0.6 | 6.5 | 22.1 | 4.8 | M6 × 0.75 | 29 |
| 9/16 | AEL202-009W3 | 0.5625 | 1.5748 | 1.126 | 0.7480 | 0.4724 | 0.024 | 0.256 | 0.870 | 0.189 | 1/4-28UNF | 1.142 |
| 5/8 | AEL202-010W3 | 0.6250 | | | | | | | | | | |
| 17 | AEL203W3 | 17 | 40 | 28.6 | 19 | 12 | 0.6 | 6.5 | 22.1 | 4.8 | M6 × 0.75 | 29 |
| 11/16 | AEL203-011W3 | 0.6875 | 1.5748 | 1.126 | 0.7480 | 0.4724 | 0.024 | 0.256 | 0.870 | 0.189 | 1/4-28UNF | 1.142 |
| 20 | AEL204W3 | 20 | 47 | 31 | 21.5 | 14 | 1 | 7.5 | 23.5 | 4.8 | M6 × 0.75 | 33 |
| 3/4 | AEL204-012W3 | 0.7500 | 1.8504 | 1.220 | 0.8465 | 0.5512 | 0.039 | 0.295 | 0.925 | 0.189 | 1/4-28UNF | 1.299 |
| 25 | AEL205W3 | 25 | 52 | 31 | 21.5 | 15 | 1 | 7.5 | 23.5 | 4.8 | M6 × 0.75 | 38 |
| 13/16 | AEL205-013W3 | 0.8125 | | | | | | | | | | |
| 7/8 | AEL205-014W3 | 0.8750 | 2.0472 | 1.220 | 0.8465 | 0.5906 | 0.039 | 0.295 | 0.925 | 0.189 | 1/4-28UNF | 1.496 |
| 15/16 | AEL205-015W3 | 0.9375 | | | | | | | | | | |
| 1 | AEL205-100W3 | 1.0000 | | | | | | | | | | |
| 30 | AEL206W3 | 30 | 62 | 35.7 | 23.8 | 16 | 1 | 9 | 26.7 | 6 | M8 × 1 | 44.5 |
| 1 1/16 | AEL206-101W3 | 1.0625 | | | | | | | | | | |
| 1 1/8 | AEL206-102W3 | 1.1250 | 2.4409 | 1.406 | 0.9370 | 0.6299 | 0.039 | 0.354 | 1.051 | 0.236 | 5/16-24UNF | 1.752 |
| 1 3/16 | AEL206-103W3 | 1.1875 | | | | | | | | | | |
| 1 1/4 | AEL206-104W3 | 1.2500 | | | | | | | | | | |
| 35 | AEL207W3 | 35 | 72 | 38.9 | 25.4 | 17 | 1.5 | 9.5 | 29.4 | 6.8 | M10 × 1.25 | 55.5 |
| 1 1/4 | AEL207-104W3 | 1.2500 | | | | | | | | | | |
| 1 5/16 | AEL207-105W3 | 1.3125 | 2.8346 | 1.531 | 1.0000 | 0.6693 | 0.059 | 0.374 | 1.157 | 0.268 | 3/8-24UNF | 2.185 |
| 1 3/8 | AEL207-106W3 | 1.3750 | | | | | | | | | | |
| 1 7/16 | AEL207-107W3 | 1.4375 | | | | | | | | | | |
| 40 | AEL208W3 | 40 | 80 | 43.7 | 30.2 | 18 | 1.5 | 11 | 32.7 | 6.8 | M10 × 1.25 | 60 |
| 1 1/2 | AEL208-108W3 | 1.5000 | 3.1496 | 1.720 | 1.1890 | 0.7087 | 0.059 | 0.433 | 1.287 | 0.268 | 3/8-24UNF | 2.362 |
| 1 9/16 | AEL208-109W3 | 1.5625 | | | | | | | | | | |
| 45 | AEL209W3 | 45 | 85 | 43.7 | 30.2 | 19 | 1.5 | 11 | 32.7 | 6.8 | M10 × 1.25 | 63.5 |
| 1 5/8 | AEL209-110W3 | 1.6250 | | | | | | | | | | |
| 1 11/16 | AEL209-111W3 | 1.6875 | 3.3465 | 1.720 | 1.1890 | 0.7480 | 0.059 | 0.433 | 1.287 | 0.268 | 3/8-24UNF | 2.500 |
| 1 3/4 | AEL209-112W3 | 1.7500 | | | | | | | | | | |

Remarks: 1) If relubricatable type is needed, please order with suffix "D1".
2) For inch series bearings, the $f_0$ factor for calculating equivalent radial load is the same as the metric series.

| Nominal dimensions | | Basic load ratings | | Factor[2)] | Mass | |
|---|---|---|---|---|---|---|
| mm | inch | N | lbf | | kg | lb |
| $B_5$ | | dynamic $C_r$ | static $C_{or}$ | $f_0$ | | |
| 13.6 | | 9 600 | 4 600 | 12.8 | 0.12 | |
| | 0.535 | 2 160 | 1 030 | | | 0.26 |
| 13.6 | | 9 600 | 4 600 | 12.8 | 0.11 | |
| | 0.535 | 2 160 | 1 030 | | | 0.26 |
| | | | | | | 0.24 |
| 13.6 | | 9 600 | 4 600 | 12.8 | 0.11 | |
| | 0.535 | 2 160 | 1 030 | | | 0.23 |
| 13.5 | | 12 800 | 6 650 | 13.2 | 0.17 | |
| | 0.531 | 2 890 | 1 500 | | | 0.35 |
| 13.5 | | 14 000 | 7 850 | 13.9 | 0.22 | |
| | | | | | | 0.51 |
| | 0.531 | 3 150 | 1 770 | | | 0.48 |
| | | | | | | 0.45 |
| | | | | | | 0.42 |
| 15.9 | | 19 500 | 11 300 | 13.8 | 0.31 | |
| | | | | | | 0.74 |
| | 0.626 | 4 400 | 2 540 | | | 0.73 |
| | | | | | | 0.66 |
| | | | | | | 0.61 |
| 17.5 | | 25 700 | 15 300 | 13.8 | 0.50 | |
| | | | | | | 1.15 |
| | 0.689 | 5 750 | 3 450 | | | 1.10 |
| | | | | | | 1.04 |
| | | | | | | 0.98 |
| 18.3 | | 29 100 | 17 800 | 14.0 | 0.66 | |
| | 0.720 | 6 550 | 4 000 | | | 1.41 |
| | | | | | | 1.34 |
| 18.3 | | 32 500 | 20 400 | 14.1 | 0.72 | |
| | | | | | | 1.79 |
| | 0.720 | 7 350 | 4 600 | | | 1.70 |
| | | | | | | 1.61 |

## Ball bearings
## Eccentric locking collar type

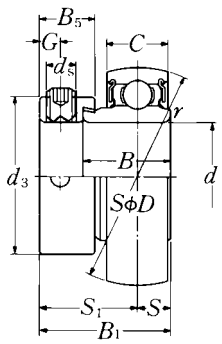


| Shaft dia. mm / inch | Bearing number 1) | Nominal dimensions d | D | B1 | B | C | rs min. (mm / inch) | S | S1 | G | ds | d3 |
|---|---|---|---|---|---|---|---|---|---|---|---|---|
| **50** | **AEL210W3** | 50 | 90 | 43.7 | 30.2 | 20 | 1.5 | 11 | 32.7 | 6.8 | M10 × 1.25 | 69.5 |
| **1 13/16** | **AEL210-113W3** | 1.8125 | 3.5433 | 1.720 | 1.1890 | 0.7874 | 0.059 | 0.433 | 1.287 | 0.268 | 3/8-24UNF | 2.736 |
| **1 7/8** | **AEL210-114W3** | 1.8750 | | | | | | | | | | |
| **1 15/16** | **AEL210-115W3** | 1.9375 | | | | | | | | | | |
| **2** | **AEL210-200W3** | 2.0000 | | | | | | | | | | |
| **55** | **AEL211W3** | 55 | 100 | 48.4 | 32.5 | 21 | 2 | 12 | 36.4 | 8 | M10 × 1.25 | 76 |
| **2** | **AEL211-200W3** | 2.0000 | 3.9370 | 1.906 | 1.2795 | 0.8268 | 0.079 | 0.472 | 1.433 | 0.315 | 3/8-24UNF | 2.992 |
| **2 1/16** | **AEL211-201W3** | 2.0625 | | | | | | | | | | |
| **2 1/8** | **AEL211-202W3** | 2.1250 | | | | | | | | | | |
| **2 3/16** | **AEL211-203W3** | 2.1875 | | | | | | | | | | |
| **60** | **AEL212W3** | 60 | 110 | 53.1 | 37.2 | 22 | 2 | 13.5 | 39.6 | 8 | M10 × 1.25 | 84 |
| **2 1/4** | **AEL212-204W3** | 2.2500 | 4.3307 | 2.091 | 1.4646 | 0.8661 | 0.079 | 0.531 | 1.559 | 0.315 | 3/8-24UNF | 3.307 |
| **2 5/16** | **AEL212-205W3** | 2.3125 | | | | | | | | | | |
| **2 3/8** | **AEL212-206W3** | 2.3750 | | | | | | | | | | |
| **2 7/16** | **AEL212-207W3** | 2.4375 | | | | | | | | | | |

Remarks: 1) If relubricatable type is needed, please order with suffix "D1".
2) For inch series bearings, the $f_0$ factor for calculating equivalent radial load is the same as the metric series.

| Nominal dimensions | | Basic load ratings | | Factor[2)] | Mass | |
|---|---|---|---|---|---|---|
| mm | inch | N | lbf | | kg | lb |
| $B_5$ | | dynamic $C_r$ | static $C_{or}$ | $f_0$ | | |
| 18.3 | | 35 000 | 23 200 | | 0.72 | |
| | | | | | | 1.81 |
| 0.720 | | 7 900 | 5 200 | 14.4 | | 1.72 |
| | | | | | | 1.63 |
| | | | | | | 1.54 |
| 20.7 | | 43 500 | 29 200 | | 0.98 | |
| | | | | | | 2.45 |
| 0.815 | | 9 750 | 6 550 | 14.3 | | 2.34 |
| | | | | | | 2.23 |
| | | | | | | 2.12 |
| 22.3 | | 52 500 | 36 000 | | 1.31 | |
| | | | | | | 3.13 |
| 0.878 | | 11 800 | 8 150 | 14.3 | | 3.00 |
| | | | | | | 2.87 |
| | | | | | | 2.71 |

## Ball bearings
## Eccentric locking collar type

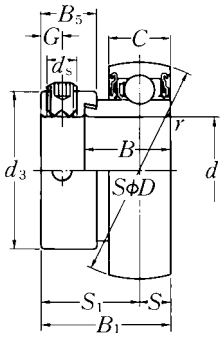


| Shaft dia. mm / inch | Bearing number [1] | Nominal dimensions mm / inch: d | D | B1 | B | C | rs min. | S | S1 | G | ds | d3 |
|---|---|---|---|---|---|---|---|---|---|---|---|---|
| 12 | JEL201W3 | 12 | 40 | 28.6 | 19 | 13 | 0.6 | 6.5 | 22.1 | 4.8 | M6 × 0.75 | 29 |
| 1/2 | JEL201-008W3 | 0.5000 | 1.5748 | 1.126 | 0.7480 | 0.5118 | 0.024 | 0.256 | 0.870 | 0.189 | 1/4-28UNF | 1.142 |
| 15 | JEL202W3 | 15 | 40 | 28.6 | 19 | 13 | 0.6 | 6.5 | 22.1 | 4.8 | M6 × 0.75 | 29 |
| 9/16 | JEL202-009W3 | 0.5625 | 1.5748 | 1.126 | 0.7480 | 0.5118 | 0.024 | 0.256 | 0.870 | 0.189 | 1/4-28UNF | 1.142 |
| 5/8 | JEL202-010W3 | 0.6250 | | | | | | | | | | |
| 17 | JEL203W3 | 17 | 40 | 28.6 | 19 | 13 | 0.6 | 6.5 | 22.1 | 4.8 | M6 × 0.75 | 29 |
| 11/16 | JEL203-011W3 | 0.6875 | 1.5748 | 1.126 | 0.7480 | 0.5118 | 0.024 | 0.256 | 0.870 | 0.189 | 1/4-28UNF | 1.142 |
| 20 | JEL204W3 | 20 | 47 | 31 | 21.5 | 15 | 1 | 7.5 | 23.5 | 4.8 | M6 × 0.75 | 33 |
| 3/4 | JEL204-012W3 | 0.7500 | 1.8504 | 1.220 | 0.8465 | 0.5906 | 0.039 | 0.295 | 0.925 | 0.189 | 1/4-28UNF | 1.299 |
| 25 | JEL205W3 | 25 | 52 | 31 | 21.5 | 15 | 1 | 7.5 | 23.5 | 4.8 | M6 × 0.75 | 38 |
| 13/16 | JEL205-013W3 | 0.8125 | | | | | | | | | | |
| 7/8 | JEL205-014W3 | 0.8750 | 2.0472 | 1.220 | 0.8465 | 0.5906 | 0.039 | 0.295 | 0.925 | 0.189 | 1/4-28UNF | 1.496 |
| 15/16 | JEL205-015W3 | 0.9375 | | | | | | | | | | |
| 1 | JEL205-100W3 | 1.0000 | | | | | | | | | | |
| 30 | JEL206W3 | 30 | 62 | 35.7 | 23.8 | 18 | 1 | 9 | 26.7 | 6 | M8 × 1 | 44.5 |
| 1 1/16 | JEL206-101W3 | 1.0625 | | | | | | | | | | |
| 1 1/8 | JEL206-102W3 | 1.1250 | 2.4409 | 1.406 | 0.9370 | 0.7087 | 0.039 | 0.354 | 1.051 | 0.236 | 5/16-24UNF | 1.752 |
| 1 3/16 | JEL206-103W3 | 1.1875 | | | | | | | | | | |
| 1 1/4 | JEL206-104W3 | 1.2500 | | | | | | | | | | |
| 35 | JEL207W3 | 35 | 72 | 38.9 | 25.4 | 19 | 1.5 | 9.5 | 29.4 | 6.8 | M10 × 1.25 | 55.5 |
| 1 1/4 | JEL207-104W3 | 1.2500 | | | | | | | | | | |
| 1 5/16 | JEL207-105W3 | 1.3125 | 2.8346 | 1.531 | 1.0000 | 0.7480 | 0.059 | 0.374 | 1.157 | 0.268 | 3/8-24UNF | 2.185 |
| 1 3/8 | JEL207-106W3 | 1.3750 | | | | | | | | | | |
| 1 7/16 | JEL207-107W3 | 1.4375 | | | | | | | | | | |
| 40 | JEL208W3 | 40 | 80 | 43.7 | 30.2 | 22 | 1.5 | 11 | 32.7 | 6.8 | M10 × 1.25 | 60 |
| 1 1/2 | JEL208-108W3 | 1.5000 | 3.1496 | 1.720 | 1.1890 | 0.8661 | 0.059 | 0.433 | 1.287 | 0.268 | 3/8-24UNF | 2.362 |
| 1 9/16 | JEL208-109W3 | 1.5625 | | | | | | | | | | |
| 45 | JEL209W3 | 45 | 85 | 43.7 | 30.2 | 22 | 1.5 | 11 | 32.7 | 6.8 | M10 × 1.25 | 63.5 |
| 1 5/8 | JEL209-110W3 | 1.6250 | | | | | | | | | | |
| 1 11/16 | JEL209-111W3 | 1.6875 | 3.3465 | 1.720 | 1.1890 | 0.8661 | 0.059 | 0.433 | 1.287 | 0.268 | 3/8-24UNF | 2.500 |
| 1 3/4 | JEL209-112W3 | 1.7500 | | | | | | | | | | |

Remarks: 1) If relubricatable type is needed, please order with suffix "D1".
2) For inch series bearings, the $f_0$ factor for calculating equivalent radial load is the same as the metric series.

| Nominal dimensions | Basic load ratings | | Factor[2)] | Mass |
|---|---|---|---|---|
| mm inch<br>$B_5$ | N lbf<br>dynamic static<br>$C_r$ $C_{or}$ | | $f_0$ | kg lb |
| 13.6<br>0.535 | 9 600<br>2 160 | 4 600<br>1 030 | 12.8 | 0.12<br>0.25 |
| 13.6<br>0.535 | 9 600<br>2 160 | 4 600<br>1 030 | 12.8 | 0.10<br>0.24<br>0.22 |
| 13.6<br>0.535 | 9 600<br>2 160 | 4 600<br>1 030 | 12.8 | 0.09<br>0.20 |
| 13.5<br>0.531 | 12 800<br>2 890 | 6 650<br>1 500 | 13.2 | 0.16<br>0.37 |
| 13.5<br>0.531 | 14 000<br>3 150 | 7 850<br>1 770 | 13.9 | 0.19<br>0.50<br>0.47<br>0.44<br>0.41 |
| 15.9<br>0.626 | 19 500<br>4 400 | 11 300<br>2 540 | 13.8 | 0.33<br>0.78<br>0.73<br>0.69<br>0.64 |
| 17.5<br>0.689 | 25 700<br>5 750 | 15 300<br>3 450 | 13.8 | 0.50<br>1.22<br>1.16<br>1.11<br>1.05 |
| 18.3<br>0.720 | 29 100<br>6 550 | 17 800<br>4 000 | 14.0 | 0.65<br>1.53<br>1.46 |
| 18.3<br>0.720 | 32 500<br>7 350 | 20 400<br>4 600 | 14.1 | 0.76<br>1.87<br>1.79<br>1.72 |

## Ball bearings
## Eccentric locking collar type

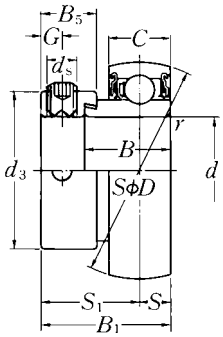


| Shaft dia. mm / inch | Bearing number 1) | Nominal dimensions d | D | B1 | B | C | rs min. (mm) | S (inch) | S1 | G | ds | d3 |
|---|---|---|---|---|---|---|---|---|---|---|---|---|
| **50** | **JEL210W3** | 50 | 90 | 43.7 | 30.2 | 22 | 1.5 | 11 | 32.7 | 6.8 | M10X1.25 | 69.5 |
| **1 13/16** | **JEL210-113W3** | 1.8125 | | | | | | | | | | |
| **1 7/8** | **JEL210-114W3** | 1.8750 | 3.5433 | 1.720 | 1.1890 | 0.8661 | 0.059 | 0.433 | 1.287 | 0.268 | 3/8-24UNF | 2.736 |
| **1 15/16** | **JEL210-115W3** | 1.9375 | | | | | | | | | | |
| 2 | **JEL210-200W3** | 2.0000 | | | | | | | | | | |
| **55** | **JEL211W3** | 55 | 100 | 48.4 | 32.5 | 24 | 2 | 12 | 36.4 | 8 | M10X1.25 | 76 |
| **2** | **JEL211-200W3** | 2.0000 | | | | | | | | | | |
| **2 1/16** | **JEL211-201W3** | 2.0625 | 3.9370 | 1.906 | 1.2795 | 0.9449 | 0.079 | 0.472 | 1.433 | 0.315 | 3/8-24UNF | 2.992 |
| **2 1/8** | **JEL211-202W3** | 2.1250 | | | | | | | | | | |
| **2 3/16** | **JEL211-203W3** | 2.1875 | | | | | | | | | | |
| **60** | **JEL212W3** | 60 | 110 | 53.1 | 37.2 | 27 | 2 | 13.5 | 39.6 | 8 | M10X1.25 | 84 |
| **2 1/4** | **JEL212-204W3** | 2.2500 | | | | | | | | | | |
| **2 5/16** | **JEL212-205W3** | 2.3125 | 4.3307 | 2.091 | 1.4646 | 1.0630 | 0.079 | 0.531 | 1.559 | 0.315 | 3/8-24UNF | 3.307 |
| **2 3/8** | **JEL212-206W3** | 2.3750 | | | | | | | | | | |
| **2 7/16** | **JEL212-207W3** | 2.4375 | | | | | | | | | | |

Remarks: 1) If relubricatable type is needed, please order with suffix "D1".
2) For inch series bearings, the $f_0$ factor for calculating equivalent radial load is the same as the metric series.

| Nominal dimensions | | Basic load ratings | | Factor[2)] | Mass | |
|---|---|---|---|---|---|---|
| mm | inch | N | lbf | | kg | lb |
| $B_5$ | | dynamic $C_r$ | static $C_{or}$ | $f_0$ | | |
| 18.3 | | 35 000 | 23 200 | | 0.84 | |
| | | | | | | 2.09 |
| 0.720 | | 7 900 | 5 200 | 14.4 | | 2.01 |
| | | | | | | 1.92 |
| | | | | | | 1.81 |
| 20.7 | | 43 500 | 29 200 | | 1.13 | |
| | | | | | | 2.78 |
| 0.815 | | 9 750 | 6 550 | 14.3 | | 2.67 |
| | | | | | | 2.56 |
| | | | | | | 2.45 |
| 22.3 | | 52 500 | 36 000 | | 1.48 | |
| | | | | | | 3.51 |
| 0.878 | | 11 800 | 8 150 | 14.3 | | 3.37 |
| | | | | | | 3.24 |
| | | | | | | 3.09 |

## Ball bearings
## Eccentric locking collar type

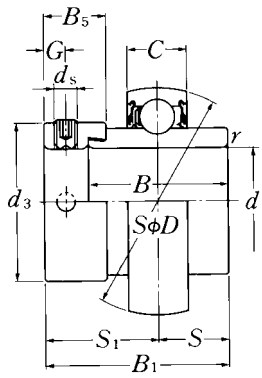


| Shaft dia. mm / inch | Bearing number 1) | Nominal dimensions d | D | B1 | B | C | rs min. (mm / inch) | S | S1 | G | ds | d3 |
|---|---|---|---|---|---|---|---|---|---|---|---|---|
| 20 | REL204W3 | 20 | 47 | 43.7 | 34.2 | 15 | 1 | 17.1 | 26.6 | 4.8 | M6 × 0.75 | 33.0 |
| 3/4 | REL204-012W3 | 0.7500 | 1.8504 | 1.720 | 1.3465 | 0.5906 | 0.039 | 0.673 | 1.047 | 0.189 | 1/4-28UNF | 1.299 |
| 25 | REL205W3 | 25 | 52 | 44.4 | 34.9 | 15 | 1 | 17.45 | 26.9 | 4.8 | M6 × 0.75 | 38.0 |
| 13/16 | REL205-013W3 | 0.8125 | | | | | | | | | | |
| 7/8 | REL205-014W3 | 0.8750 | 2.0472 | 1.748 | 1.3740 | 0.5906 | 0.039 | 0.687 | 1.059 | 0.189 | 1/4-28UNF | 1.496 |
| 15/16 | REL205-015W3 | 0.9375 | | | | | | | | | | |
| 1 | REL205-100W3 | 1.0000 | | | | | | | | | | |
| 30 | REL206W3 | 30 | 62 | 48.4 | 36.5 | 18 | 1 | 18.25 | 30.1 | 6 | M8 × 1 | 44.5 |
| 1 1/16 | REL206-101W3 | 1.0625 | | | | | | | | | | |
| 1 1/8 | REL206-102W3 | 1.1250 | 2.4409 | 1.906 | 1.4370 | 0.7087 | 0.039 | 0.719 | 1.185 | 0.236 | 5/16-24UNF | 1.752 |
| 1 3/16 | REL206-103W3 | 1.1875 | | | | | | | | | | |
| 1 1/4 | REL206-104W3 | 1.2500 | | | | | | | | | | |
| 35 | REL207W3 | 35 | 72 | 51.1 | 37.6 | 19 | 1.5 | 18.8 | 32.3 | 6.8 | M10 × 1.25 | 55.5 |
| 1 1/4 | REL207-104W3 | 1.2500 | | | | | | | | | | |
| 1 5/16 | REL207-105W3 | 1.3125 | 2.8346 | 2.012 | 1.4803 | 0.7480 | 0.059 | 0.740 | 1.272 | 0.268 | 3/8-24UNF | 2.185 |
| 1 3/8 | REL207-106W3 | 1.3750 | | | | | | | | | | |
| 1 7/16 | REL207-107W3 | 1.4375 | | | | | | | | | | |
| 40 | REL208W3 | 40 | 80 | 56.3 | 42.8 | 22 | 1.5 | 21.4 | 34.9 | 6.8 | M10 × 1.25 | 60.0 |
| 1 1/2 | REL208-108W3 | 1.5000 | 3.1496 | 2.217 | 1.6850 | 0.8661 | 0.059 | 0.843 | 1.374 | 0.268 | 3/8-24UNF | 2.362 |
| 1 9/16 | REL208-109W3 | 1.5625 | | | | | | | | | | |
| 45 | REL209W3 | 45 | 85 | 56.3 | 42.8 | 22 | 1.5 | 21.4 | 34.9 | 6.8 | M10 × 1.25 | 63.5 |
| 1 5/8 | REL209-110W3 | 1.6250 | | | | | | | | | | |
| 1 11/16 | REL209-111W3 | 1.6875 | 3.3465 | 2.217 | 1.6850 | 0.8661 | 0.059 | 0.843 | 1.374 | 0.268 | 3/8-24UNF | 2.500 |
| 1 3/4 | REL209-112W3 | 1.7500 | | | | | | | | | | |
| 50 | REL210W3 | 50 | 90 | 62.7 | 49.2 | 22 | 1.5 | 24.6 | 38.1 | 6.8 | M10 × 1.25 | 69.5 |
| 1 13/16 | REL210-113W3 | 1.8125 | | | | | | | | | | |
| 1 7/8 | REL210-114W3 | 1.8750 | 3.5433 | 2.469 | 1.9370 | 0.8661 | 0.059 | 0.969 | 1.500 | 0.268 | 3/8-24UNF | 2.736 |
| 1 15/16 | REL210-115W3 | 1.9375 | | | | | | | | | | |
| 2 | REL210-200W3 | 2.0000 | | | | | | | | | | |

Remarks: 1) If relubricatable type is needed, please order with suffix "D1".
2) For inch series bearings, the $f_0$ factor for calculating equivalent radial load is the same as the metric series.

| Nominal dimensions | | Basic load ratings | | Factor[2)] | Mass | |
|---|---|---|---|---|---|---|
| mm | inch | N | lbf | | kg | lb |
| $B_5$ | | dynamic $C_r$ | static $C_{or}$ | $f_0$ | | |
| 13.5 | | 12 800 | 6 650 | 13.2 | 0.22 | |
| | 0.531 | 2 890 | 1 500 | | | 0.43 |
| 13.5 | | 14 000 | 7 850 | 13.9 | 0.26 | |
| | | | | | | 0.59 |
| | 0.531 | 3 150 | 1 770 | | 0.56 | |
| | | | | | 0.53 | |
| | | | | | | 0.49 |
| 15.9 | | 19 500 | 11 300 | 13.8 | 0.39 | |
| | | | | | | 0.92 |
| | 0.626 | 4 400 | 2 540 | | 0.87 | |
| | | | | | 0.82 | |
| | | | | | | 0.78 |
| 17.5 | | 25 700 | 15 300 | 13.8 | 0.59 | |
| | | | | | | 1.41 |
| | 0.689 | 5 750 | 3 450 | | 1.36 | |
| | | | | | 1.31 | |
| | | | | | | 1.24 |
| 18.3 | | 29 100 | 17 800 | 14.0 | 0.76 | |
| | 0.720 | 6 550 | 4 000 | | 1.88 | |
| | | | | | | 1.80 |
| 18.3 | | 32 500 | 20 400 | 14.1 | 0.78 | |
| | | | | | | 2.01 |
| | 0.720 | 7 350 | 4 600 | | 1.93 | |
| | | | | | | 1.84 |
| 18.3 | | 35 000 | 23 200 | 14.4 | 0.96 | |
| | | | | | | 2.42 |
| | 0.720 | 7 900 | 5 200 | | 2.32 | |
| | | | | | | 2.21 |
| | | | | | | 2.05 |

## Ball bearings
## Eccentric locking collar type

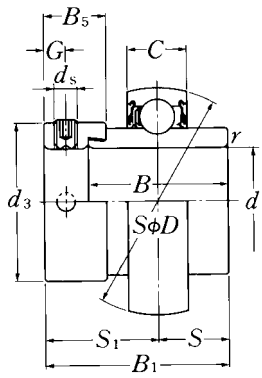


| Shaft dia. mm / inch | Bearing number 1) | Nominal dimensions d | D | B1 | B | C | rs min. | S | S1 | G | ds | d3 |
|---|---|---|---|---|---|---|---|---|---|---|---|---|
| | | mm | | | | | mm | inch | | | | |
| **55** | **REL211W3** | 55 | 100 | 71.4 | 55.5 | 24 | 2 | 27.75 | 43.6 | 8 | M10 × 1.25 | 76 |
| **2** | **REL211-200W3** | 2.0000 | 3.9370 | 2.811 | 2.1850 | 0.9449 | 0.079 | 1.093 | 1.717 | 0.315 | 3/8-24UNF | 2.992 |
| **2 1/16** | **REL211-201W3** | 2.0625 | | | | | | | | | | |
| **2 1/8** | **REL211-202W3** | 2.1250 | | | | | | | | | | |
| **2 3/16** | **REL211-203W3** | 2.1875 | | | | | | | | | | |
| **60** | **REL212W3** | 60 | 110 | 77.8 | 61.9 | 27 | 2 | 30.95 | 46.8 | 8 | M10 × 1.25 | 84 |
| **2 1/4** | **REL212-204W3** | 2.2500 | 4.3307 | 3.063 | 2.4370 | 1.0630 | 0.079 | 1.219 | 1.843 | 0.315 | 3/8-24UNF | 3.307 |
| **2 5/16** | **REL212-205W3** | 2.3125 | | | | | | | | | | |
| **2 3/8** | **REL212-206W3** | 2.3750 | | | | | | | | | | |
| **2 7/16** | **REL212-207W3** | 2.4375 | | | | | | | | | | |

Remarks: 1) If relubricatable type is needed, please order with suffix "D1".
2) For inch series bearings, the $f_0$ factor for calculating equivalent radial load is the same as the metric series.

| Nominal dimensions | | Basic load ratings | | Factor[2)] | Mass | |
|---|---|---|---|---|---|---|
| mm | inch | N | lbf | | kg | lb |
| $B_5$ | | dynamic $C_r$ | static $C_{or}$ | $f_0$ | | |
| 20.7 | | 43 500 | 29 200 | | 1.28 | |
| | | | | | | 3.21 |
| 0.815 | | 9 750 | 6 550 | 14.3 | 3.05 | |
| | | | | | 2.95 | |
| | | | | | | 2.83 |
| 22.3 | | 52 500 | 36 000 | | 1.83 | |
| | | | | | | 4.29 |
| 0.878 | | 11 800 | 8 150 | 14.3 | 4.13 | |
| | | | | | 3.96 | |
| | | | | | | 3.79 |

## Ball bearings
## Adapter type

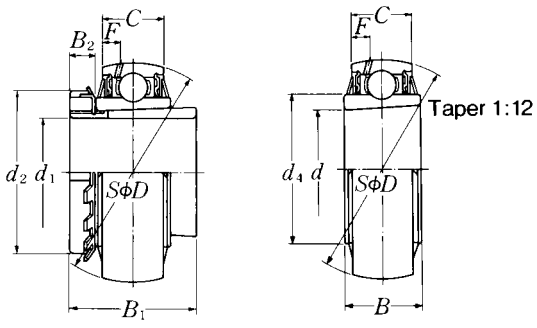


UK2···D1;H,HA, HE,HS  UK2···D1

| Shaft dia. mm / inch | Bearing number 1) 2) | Nominal dimensions mm / inch | | | | | | | | | |
|---|---|---|---|---|---|---|---|---|---|---|---|
| | | $d$ | $D$ | $B$ | $C$ | $d_4$ | $d_1$ | $B_1$ | $B_2$ | $d_2$ | $F$ |
| 20 | UK205D1;H2305X | 25 | 52 | 23 | 17 | 33.9 | 20 | 35 | 8 | 38 | 4.5 |
| 3/4 | UK205D1;HE2305 | 0.9843 | 2.0472 | 0.9055 | 0.6693 | 1.335 | 3/4 | 1.378 | 0.315 | 1.496 | 0.177 |
| 25 | UK206D1;H2306X | 30 | 62 | 26 | 19 | 40.8 | 25 | 38 | 8 | 45 | 4.6 |
| 7/8 | UK206D1;HS2306 | 1.1811 | 2.4409 | 1.0236 | 0.7480 | 1.606 | 7/8 | 1.496 | 0.315 | 1.772 | 0.181 |
| 1 | UK206D1;HE2306X | | | | | | 1 | | | | |
| 30 | UK207D1;H2307X | 35 | 72 | 29 | 20 | 46.8 | 30 | 43 | 9 | 52 | 4.6 |
| 1 1/8 | UK207D1;HS2307 | 1.3780 | 2.8346 | 1.1417 | 0.7874 | 1.843 | 1 1/8 | 1.693 | 0.354 | 2.047 | 0.181 |
| 35 | UK208D1;H2308X | 40 | 80 | 31 | 21 | 53 | 35 | 46 | 10 | 58 | 4.5 |
| 1 1/4 | UK208D1;HE2308X | 1.5748 | 3.1496 | 1.2205 | 0.8268 | 2.087 | 1 1/4 | 1.811 | 0.394 | 2.283 | 0.177 |
| 1 3/8 | UK208D1;HS2308X | | | | | | 1 3/8 | | | | |
| 40 | UK209D1;H2309X | 45 | 85 | 31 | 22 | 57.5 | 40 | 50 | 11 | 65 | 4.9 |
| 1 7/16 | UK209D1;HA2309 | | | | | | 1 7/16 | | | | |
| 1 1/2 | UK209D1;HE2309X | 1.7717 | 3.3465 | 1.2205 | 0.8661 | 2.264 | 1 1/2 | 1.969 | 0.433 | 2.559 | 0.193 |
| 1 5/8 | UK209D1;HS2309X | | | | | | 1 5/8 | | | | |
| 45 | UK210D1;H2310X | 50 | 90 | 32 | 24 | 62.4 | 45 | 55 | 12 | 70 | 5.9 |
| 1 5/8 | UK210D1;HS2310 | | | | | | 1 5/8 | | | | |
| 1 11/16 | UK210D1;HA2310 | 1.9685 | 3.5433 | 1.2598 | 0.9449 | 2.457 | 1 11/16 | 2.165 | 0.472 | 2.756 | 0.232 |
| 1 3/4 | UK210D1;HE2310X | | | | | | 1 3/4 | | | | |
| 50 | UK211D1;H2311X | 55 | 100 | 35 | 25 | 69 | 50 | 59 | 12 | 75 | 6.0 |
| 1 7/8 | UK211D1;HS2311 | | | | | | 1 7/8 | | | | |
| 1 15/16 | UK211D1;HA2311 | 2.1654 | 3.9370 | 1.3780 | 0.9843 | 2.717 | 1 15/16 | 2.323 | 0.472 | 2.953 | 0.236 |
| 2 | UK211D1;HE2311XY | | | | | | 2 | | | | |
| 55 | UK212D1;H2312X | 60 | 110 | 38 | 27 | 77 | 55 | 62 | 13 | 80 | 6.2 |
| 2 1/8 | UK212D1;HS2312 | 2.3622 | 4.3307 | 1.4961 | 1.0630 | 3.031 | 2 1/8 | 2.441 | 0.512 | 3.150 | 0.244 |
| 60 | UK213D1;H2313X | 65 | 120 | 40 | 32 | 82.5 | 60 | 65 | 14 | 85 | 8.7 |
| 2 3/16 | UK213D1;HA2313 | | | | | | 2 3/16 | | | | |
| 2 1/4 | UK213D1;HE2313X | 2.5591 | 4.7244 | 1.5748 | 1.2598 | 3.248 | 2 1/4 | 2.559 | 0.551 | 3.346 | 0.343 |
| 2 3/8 | UK213D1;HS2313X | | | | | | 2 3/8 | | | | |

Remarks: 1) Adapter number with suffix "X" means a narrow slot type adapter sleeve.
In this case the lock washer with the straight inner prong should be used.
2) For HE2311XY, screw thread pitch different from the standard is applied, because of the thin thread section of sleeve.
To distinguish it, a suffix "Y" is added.
3) For inch series bearings, the $f_0$ factor for calculating equivalent radial load is the same as the metric series.

| Basic load ratings | | Factor[3)] | Mass |
|---|---|---|---|
| N<br>dynamic<br>$C_r$ | lbf<br>static<br>$C_{or}$ | $f_0$ | kg lb |
| 14 000<br>3 150 | 7 850<br>1 770 | 13.9 | 0.23<br>0.57 |
| 19 500<br>4 400 | 11 300<br>2 540 | 13.8 | 0.36<br>0.86<br>0.78 |
| 25 700<br>5 750 | 15 300<br>3 450 | 13.8 | 0.55<br>1.30 |
| 29 100<br>6 550 | 17 800<br>4 000 | 14.0 | 0.74<br>1.77<br>1.63 |
| 32 500<br>7 350 | 20 400<br>4 600 | 14.1 | 0.80<br>2.01<br>1.93<br>1.76 |
| 35 000<br>7 900 | 23 200<br>5 200 | 14.4 | 0.94<br>2.38<br>2.28<br>2.18 |
| 43 500<br>9 750 | 29 200<br>6 550 | 14.3 | 1.22<br>2.96<br>2.84<br>2.70 |
| 52 500<br>11 800 | 36 000<br>8 150 | 14.3 | 1.54<br>3.60 |
| 57 500<br>12 900 | 40 000<br>9 000 | 14.4 | 2.00<br>4.86<br>4.70<br>4.38 |

## Ball bearings
## Adapter type

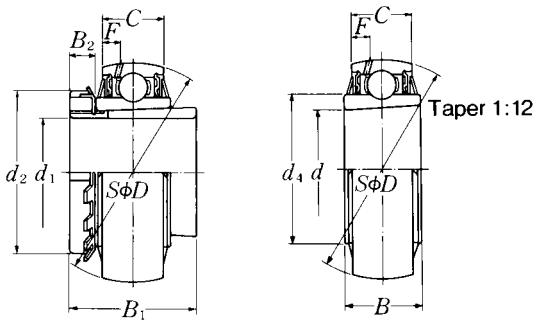


UK2···D1;H,HA, HE,HS  UK2···D1

| Shaft dia. mm / inch | Bearing number 1) 2) | Nominal dimensions mm / inch | | | | | | | | | |
|---|---|---|---|---|---|---|---|---|---|---|---|
| | | $d$ | $D$ | $B$ | $C$ | $d_4$ | $d_1$ | $B_1$ | $B_2$ | $d_2$ | $F$ |
| 65 | UK215D1;H2315X | 75 | 130 | 44 | 34 | 93 | 65 | 73 | 15 | 98 | 9.0 |
| 2 7/16 | UK215D1;HA2315 | 2.9528 | 5.1181 | 1.7323 | 1.3386 | 3.661 | 2 7/16 | 2.874 | 0.591 | 3.858 | 0.354 |
| 2 1/2 | UK215D1;HE2315X | | | | | | 2 1/2 | | | | |
| 70 | UK216D1;H2316X | 80 | 140 | 45 | 35 | 98.1 | 70 | 78 | 17 | 105 | 9.5 |
| 2 11/16 | UK216D1;HA2316 | 3.1496 | 5.5118 | 1.7717 | 1.3780 | 3.862 | 2 11/16 | 3.071 | 0.669 | 4.134 | 0.374 |
| 2 3/4 | UK216D1;HE2316X | | | | | | 2 3/4 | | | | |
| 75 | UK217D1;H2317X | 85 | 150 | 46 | 36 | 106.4 | 75 | 82 | 18 | 110 | 10.1 |
| 2 15/16 | UK217D1;HA2317X | 3.3465 | 5.9055 | 1.8110 | 1.4173 | 4.189 | 2 15/16 | 3.228 | 0.709 | 4.331 | 0.398 |
| 3 | UK217D1;HE2317X | | | | | | 3 | | | | |
| 80 | UK218D1;H2318X | 90 | 160 | 47 | 37 | 111.6 | 80 | 86 | 18 | 120 | 9.8 |
| 3 3/16 | UK218D1;HA2318X | 3.5433 | 6.2992 | 1.8504 | 1.4567 | 4.394 | 3 3/16 | 3.386 | 0.709 | 4.724 | 0.386 |

Remarks: 1) Adapter number with suffix "X" means a narrow slot type adapter sleeve.
In this case the lock washer with the straight inner prong should be used.
2) For HE2311XY, screw thread pitch different from the standard is applied, because of the thin thread section of sleeve.
To distinguish it, a suffix "Y" is added.
3) For inch series bearings, the $f_0$ factor for calculating equivalent radial load is the same as the metric series.

| Basic load ratings | | Factor[3)] | Mass | |
|---|---|---|---|---|
| N | lbf | | kg | lb |
| dynamic $C_r$ | static $C_{or}$ | $f_0$ | | |
| 66 000 | 49 500 | 14.7 | 2.56 | |
| 14 900 | 11 100 | | 6.04 | |
| | | | 5.84 | |
| 72 500 | 53 000 | 14.6 | 3.23 | |
| 16 300 | 11 900 | | 7.38 | |
| | | | 7.14 | |
| 83 500 | 64 000 | 14.7 | 3.93 | |
| 18 700 | 14 300 | | 8.73 | |
| | | | 8.46 | |
| 96 000 | 71 500 | 14.5 | 4.51 | |
| 21 600 | 16 100 | | 11.0 | |

## Ball bearings
## Adapter type

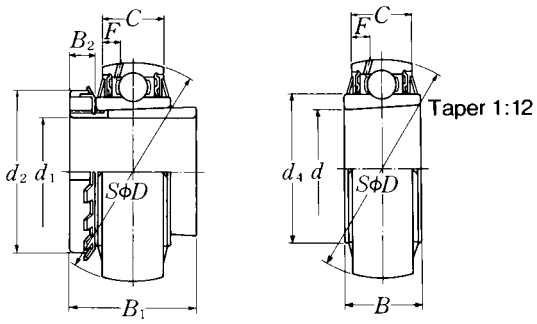


UK3···D1;H, HA, HE, HS  UK3···D1

| Shaft dia. mm / inch | Bearing number 1) 2) | Nominal dimensions mm / inch | | | | | | | | | |
|---|---|---|---|---|---|---|---|---|---|---|---|
| | | $d$ | $D$ | $B$ | $C$ | $d_4$ | $d_1$ | $B_1$ | $B_2$ | $d_2$ | $F$ |
| 20 | UK305D1;H2305X | 25 | 62 | 26 | 20 | 36.8 | 20 | 35 | 8 | 38 | 5.0 |
| 3/4 | UK305D1;HE2305 | 0.9843 | 2.4409 | 1.0236 | 0.7874 | 1.449 | 3/4 | 1.378 | 0.315 | 1.496 | 0.197 |
| 25 | UK306D1;H2306X | 30 | 72 | 29 | 23 | 44.9 | 25 | 38 | 8 | 45 | 5.9 |
| 7/8 | UK306D1;HS2306 | 1.1811 | 2.8346 | 1.1417 | 0.9055 | 1.768 | 7/8 | 1.496 | 0.315 | 1.772 | 0.232 |
| 1 | UK306D1;HE2306X | | | | | | 1 | | | | |
| 30 | UK307D1;H2307X | 35 | 80 | 33 | 25 | 49.4 | 30 | 43 | 9 | 52 | 6.8 |
| 1 1/8 | UK307D1;HS2307 | 1.3780 | 3.1496 | 1.2992 | 0.9843 | 1.945 | 1 1/8 | 1.693 | 0.354 | 2.047 | 0.268 |
| 35 | UK308D1;H2308X | 40 | 90 | 34 | 27 | 56 | 35 | 46 | 10 | 58 | 7.4 |
| 1 1/4 | UK308D1;HE2308X | 1.5748 | 3.5433 | 1.3386 | 1.0630 | 2.205 | 1 1/4 | 1.811 | 0.394 | 2.283 | 0.291 |
| 1 3/8 | UK308D1;HS2308X | | | | | | 1 3/8 | | | | |
| 40 | UK309D1;H2309X | 45 | 100 | 37 | 29 | 63.5 | 40 | 50 | 11 | 65 | 7.4 |
| 1 7/16 | UK309D1;HA2309 | | | | | | 1 7/16 | | | | |
| 1 1/2 | UK309D1;HE2309X | 1.7717 | 3.9370 | 1.4567 | 1.1417 | 2.500 | 1 1/2 | 1.969 | 0.433 | 2.559 | 0.291 |
| 1 5/8 | UK309D1;HS2309X | | | | | | 1 5/8 | | | | |
| 45 | UK310D1;H2310X | 50 | 110 | 41 | 32 | 70.6 | 45 | 55 | 12 | 70 | 8.1 |
| 1 5/8 | UK310D1;HS2310 | | | | | | 1 5/8 | | | | |
| 1 11/16 | UK310D1;HA2310 | 1.9685 | 4.3307 | 1.6142 | 1.2598 | 2.780 | 1 11/16 | 2.165 | 0.472 | 2.756 | 0.319 |
| 1 3/4 | UK310D1;HE2310X | | | | | | 1 3/4 | | | | |
| 50 | UK311D1;H2311X | 55 | 120 | 44 | 34 | 76.6 | 50 | 59 | 12 | 75 | 8.5 |
| 1 7/8 | UK311D1;HS2311 | | | | | | 1 7/8 | | | | |
| 1 15/16 | UK311D1;HA2311 | 2.1654 | 4.7244 | 1.7323 | 1.3386 | 3.016 | 1 15/16 | 2.323 | 0.472 | 2.953 | 0.335 |
| 2 | UK311D1;HE2311XY | | | | | | 2 | | | | |
| 55 | UK312D1;H2312X | 60 | 130 | 47 | 36 | 82.7 | 55 | 62 | 13 | 80 | 9.0 |
| 2 1/8 | UK312D1;HS2312 | 2.3622 | 5.1181 | 1.8504 | 1.4173 | 3.256 | 2 1/8 | 2.441 | 0.512 | 3.150 | 0.354 |
| 60 | UK313D1;H2313X | 65 | 140 | 49 | 39 | 88.2 | 60 | 65 | 14 | 85 | 10.1 |
| 2 3/16 | UK313D1;HA2313 | | | | | | 2 3/16 | | | | |
| 2 1/4 | UK313D1;HE2313X | 2.5591 | 5.5118 | 1.9291 | 1.5354 | 3.472 | 2 1/4 | 2.559 | 0.551 | 3.346 | 0.398 |
| 2 3/8 | UK313D1;HS2313X | | | | | | 2 3/8 | | | | |

Remarks: 1) Adapter number with suffix "X" means a narrow slot type adapter sleeve.
In this case the lock washer with the straight inner prong should be used.
2) For HE2311XY, screw thread pitch different from the standard is applied, because of the thin thread section of sleeve.
To distinguish it, a suffix "Y" is added.
3) For inch series bearings, the $f_0$ factor for calculating equivalent radial load is the same as the metric series.

| Basic load ratings | | Factor[3)] | Mass |
|---|---|---|---|
| N<br>dynamic<br>$C_r$ | lbf<br>static<br>$C_{or}$ | $f_0$ | kg lb |
| 21 200<br>4 750 | 10 900<br>2 460 | 12.6 | 0.36<br>0.81 |
| 26 700<br>6 000 | 15 000<br>3 400 | 13.3 | 0.59<br>1.37<br>1.29 |
| 33 500<br>7 500 | 19 100<br>4 300 | 13.1 | 0.75<br>1.70 |
| 40 500<br>9 150 | 24 000<br>5 400 | 13.2 | 1.00<br>2.38<br>2.25 |
| 53 000<br>11 900 | 32 000<br>7 200 | 13.1 | 1.28<br>3.22<br>3.14<br>2.97 |
| 62 000<br>13 900 | 38 500<br>8 600 | 13.2 | 1.72<br>3.95<br>3.85<br>3.74 |
| 71 500<br>16 100 | 45 000<br>10 100 | 13.2 | 2.06<br>4.73<br>4.60<br>4.46 |
| 82 000<br>18 400 | 52 000<br>11 700 | 13.2 | 2.58<br>5.67 |
| 92 500<br>20 800 | 60 000<br>13 400 | 13.2 | 3.08<br>7.24<br>7.08<br>6.76 |

## Ball bearings
## Adapter type

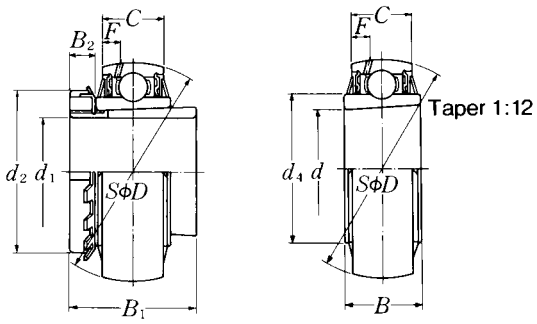


UK3···D1;H, HA, HE, HS  UK3···D1

| Shaft dia. mm / inch | Bearing number 1) 2) | Nominal dimensions mm / inch | | | | | | | | | |
|---|---|---|---|---|---|---|---|---|---|---|---|
| | | $d$ | $D$ | $B$ | $C$ | $d_4$ | $d_1$ | $B_1$ | $B_2$ | $d_2$ | $F$ |
| 65 | UK315D1;H2315X | 75 | 160 | 55 | 43 | 101.3 | 65 | 73 | 15 | 98 | 11.0 |
| 2 7/16 | UK315D1;HA2315 | 2.9528 | 6.2992 | 2.1654 | 1.6929 | 3.988 | 2 7/16 | 2.874 | 0.591 | 3.858 | 0.433 |
| 2 1/2 | UK315D1;HE2315X | | | | | | 2 1/2 | | | | |
| 70 | UK316D1;H2316X | 80 | 170 | 58 | 45 | 107.9 | 70 | 78 | 17 | 105 | 11.4 |
| 2 11/16 | UK316D1;HA2316 | 3.1496 | 6.6929 | 2.2835 | 1.7717 | 4.248 | 2 11/16 | 3.071 | 0.669 | 4.134 | 0.449 |
| 2 3/4 | UK316D1;HE2316X | | | | | | 2 3/4 | | | | |
| 75 | UK317D1;H2317X | 85 | 180 | 60 | 47 | 114.4 | 75 | 82 | 18 | 110 | 12.0 |
| 2 15/16 | UK317D1;HA2317X | 3.3465 | 7.0866 | 2.3622 | 1.8504 | 4.504 | 2 15/16 | 3.228 | 0.709 | 4.331 | 0.472 |
| 3 | UK317D1;HE2317X | | | | | | 3 | | | | |
| 80 | UK318D1;H2318X | 90 | 190 | 64 | 49 | 120.9 | 80 | 86 | 18 | 120 | 12.3 |
| 3 3/16 | UK318D1;HA2318X | 3.5433 | 7.4803 | 2.5197 | 1.9291 | 4.760 | 3 3/16 | 3.386 | 0.709 | 4.724 | 0.484 |
| 85 | UK319D1;H2319X | 95 | 200 | 67 | 51 | 127.5 | 85 | 90 | 19 | 125 | 12.8 |
| 3 1/4 | UK319D1;HE2319X | 3.7402 | 7.8740 | 2.6378 | 2.0079 | 5.020 | 3 1/4 | 3.543 | 0.748 | 4.921 | 0.504 |
| 90 | UK320D1;H2320X | 100 | 215 | 73 | 55 | 135.6 | 90 | 97 | 20 | 130 | 13.5 |
| 3 7/16 | UK320D1;HA2320 | 3.9370 | 8.4646 | 2.8740 | 2.1654 | 5.339 | 3 7/16 | 3.819 | 0.787 | 5.118 | 0.531 |
| 3 1/2 | UK320D1;HE2320X | | | | | | 3 1/2 | | | | |
| 100 | UK322D1;H2322X | 110 | 240 | 80 | 59 | 151.7 | 100 | 105 | 21 | 145 | 13.9 |
| 110 | UK324D1;H2324X | 120 | 260 | 86 | 63 | 165.2 | 110 | 112 | 22 | 155 | 16.0 |
| 115 | UK326D1;H2326 | 130 | 280 | 90 | 67 | 178.3 | 115 | 121 | 23 | 165 | 16.9 |
| 125 | UK328D1;H2328 | 140 | 300 | 95 | 71 | 190.4 | 125 | 131 | 24 | 180 | 17.7 |

Remarks: 1) Adapter number with suffix "X" means a narrow slot type adapter sleeve.
In this case the lock washer with the straight inner prong should be used.
2) For HE2311XY, screw thread pitch different from the standard is applied, because of the thin thread section of sleeve.
To distinguish it, a suffix "Y" is added.
3) For inch series bearings, the $f_0$ factor for calculating equivalent radial load is the same as the metric series.

| Basic load ratings | | Factor[3)] | Mass |
|---|---|---|---|
| N<br>dynamic<br>$C_r$ | lbf<br>static<br>$C_{or}$ | $f_0$ | kg lb |
| 113 000<br>25 500 | 77 000<br>17 400 | 13.2 | 4.75<br>11.1<br>10.9 |
| 123 000<br>27 600 | 86 500<br>19 500 | 13.3 | 5.75<br>12.9<br>12.7 |
| 133 000<br>29 800 | 97 000<br>21 800 | 13.3 | 6.72<br>14.9<br>14.6 |
| 143 000<br>32 000 | 107 000<br>24 100 | 13.3 | 7.75<br>17.2 |
| 153 000<br>34 500 | 119 000<br>26 600 | 13.3 | 9.02<br>20.4 |
| 173 000<br>39 000 | 141 000<br>31 500 | 13.2 | 11.0<br>24.7<br>25.1 |
| 205 000 | 179 000 | 13.1 | 14.9 |
| 207 000 | 185 000 | 13.5 | 18.0 |
| 229 000 | 214 000 | 13.6 | 23.3 |
| 253 000 | 246 000 | 13.6 | 28.6 |

## Ball bearings
## Adapter type

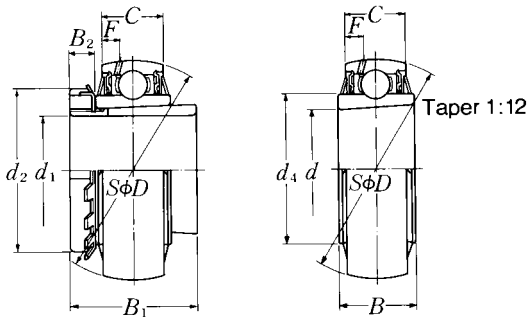


UKX···D1;H, HA, HE, HS  UKX···D1

| Shaft dia. mm / inch | Bearing number 1) 2) | Nominal dimensions mm / inch | | | | | | | | | |
|---|---|---|---|---|---|---|---|---|---|---|---|
| | | $d$ | $D$ | $B$ | $C$ | $d_4$ | $d_1$ | $B_1$ | $B_2$ | $d_2$ | $F$ |
| 20 | UKX05D1;H2305X | 25 | 62 | 26 | 19 | 40.8 | 20 | 35 | 8 | 38 | 4.6 |
| 3/4 | UKX05D1;HE2305 | 0.9843 | 2.4409 | 1.0236 | 0.7480 | 1.606 | 3/4 | 1.378 | 0.315 | 1.496 | 0.181 |
| 25 | UKX06D1;H2306X | 30 | 72 | 29 | 20 | 46.8 | 25 | 38 | 8 | 45 | 4.6 |
| 7/8 | UKX06D1;HS2306 | 1.1811 | 2.8346 | 1.1417 | 0.7874 | 1.843 | 7/8 | 1.496 | 0.315 | 1.772 | 0.181 |
| 1 | UKX06D1;HE2306X | | | | | | 1 | | | | |
| 30 | UKX07D1;H2307X | 35 | 80 | 31 | 21 | 53 | 30 | 43 | 9 | 52 | 4.5 |
| 1 1/8 | UKX07D1;HS2307 | 1.3780 | 3.1496 | 1.2205 | 0.8268 | 2.087 | 1 1/8 | 1.693 | 0.354 | 2.047 | 0.177 |
| 35 | UKX08D1;H2308X | 40 | 85 | 31 | 22 | 57.5 | 35 | 46 | 10 | 58 | 4.9 |
| 1 1/4 | UKX08D1;HE2308X | 1.5748 | 3.3465 | 1.2205 | 0.8661 | 2.264 | 1 1/4 | 1.811 | 0.394 | 2.283 | 0.193 |
| 1 3/8 | UKX08D1;HS2308X | | | | | | 1 3/8 | | | | |
| 40 | UKX09D1;H2309X | 45 | 90 | 32 | 24 | 62.4 | 40 | 50 | 11 | 65 | 5.9 |
| 1 7/16 | UKX09D1;HA2309 | | | | | | 1 7/16 | | | | |
| 1 1/2 | UKX09D1;HE2309X | 1.7717 | 3.5433 | 1.2598 | 0.9449 | 2.457 | 1 1/2 | 1.969 | 0.433 | 2.559 | 0.232 |
| 1 5/8 | UKX09D1;HS2309X | | | | | | 1 5/8 | | | | |
| 45 | UKX10D1;H2310X | 50 | 100 | 35 | 25 | 69 | 45 | 55 | 12 | 70 | 6.0 |
| 1 5/8 | UKX10D1;HS2310 | | | | | | 1 5/8 | | | | |
| 1 11/16 | UKX10D1;HA2310 | 1.9685 | 3.9370 | 1.3780 | 0.9843 | 2.717 | 1 11/16 | 2.165 | 0.472 | 2.756 | 0.236 |
| 1 3/4 | UKX10D1;HE2310X | | | | | | 1 3/4 | | | | |
| 50 | UKX11D1;H2311X | 55 | 110 | 38 | 27 | 77 | 50 | 59 | 12 | 75 | 6.2 |
| 1 7/8 | UKX11D1;HS2311 | | | | | | 1 7/8 | | | | |
| 1 15/16 | UKX11D1;HA2311 | 2.1654 | 4.3307 | 1.4961 | 1.0630 | 3.031 | 1 15/16 | 2.323 | 0.472 | 2.953 | 0.244 |
| 2 | UKX11D1;HE2311XY | | | | | | 2 | | | | |
| 55 | UKX12D1;H2312X | 60 | 120 | 40 | 32 | 82.5 | 55 | 62 | 13 | 80 | 8.7 |
| 2 1/8 | UKX12D1;HS2312 | 2.3622 | 4.7244 | 1.5748 | 1.2598 | 3.248 | 2 1/8 | 2.441 | 0.512 | 3.150 | 0.343 |
| 60 | UKX13D1;H2313X | 65 | 125 | 42 | 33 | 87 | 60 | 65 | 14 | 85 | 8.8 |
| 2 3/16 | UKX13D1;HA2313 | | | | | | 2 3/16 | | | | |
| 2 1/4 | UKX13D1;HE2313X | 2.5591 | 4.9213 | 1.6535 | 1.2992 | 3.425 | 2 1/4 | 2.559 | 0.551 | 3.346 | 0.346 |
| 2 3/8 | UKX13D1;HS2313X | | | | | | 2 3/8 | | | | |

Remarks: 1) Adapter number with suffix "X" means a narrow slot type adapter sleeve.
In this case the lock washer with the straight inner prong should be used.
2) For HE2311XY, screw thread pitch different from the standard is applied, because of the thin thread section of sleeve.
To distinguish it, a suffix "Y" is added.
3) For inch series bearings, the $f_0$ factor for calculating equivalent radial load is the same as the metric series.

| Basic load ratings | | Factor[3)] | Mass |
|---|---|---|---|
| N | lbf | | kg lb |
| dynamic $C_r$ | static $C_{or}$ | $f_0$ | |
| 19 500 | 11 300 | 13.8 | 0.38 |
| 4 400 | 2 540 | | 0.85 |
| 25 700 | 15 300 | 13.8 | 0.53 |
| 5 750 | 3 450 | | 1.24 |
| | | | 1.16 |
| 29 100 | 17 800 | 14.0 | 0.75 |
| 6 550 | 4 000 | | 1.70 |
| 32 500 | 20 400 | 14.1 | 0.85 |
| 7 350 | 4 600 | | 2.01 |
| | | | 1.88 |
| 35 000 | 23 200 | 14.4 | 0.97 |
| 7 900 | 5 200 | | 2.32 |
| | | | 2.24 |
| | | | 2.07 |
| 43 500 | 29 200 | 14.3 | 1.26 |
| 9 750 | 6 550 | | 3.09 |
| | | | 2.99 |
| | | | 2.88 |
| 52 500 | 36 000 | 14.3 | 1.62 |
| 11 800 | 8 150 | | 3.84 |
| | | | 3.72 |
| | | | 3.58 |
| 57 500 | 40 000 | 14.4 | 2.07 |
| 12 900 | 9 000 | | 4.66 |
| 62 000 | 44 000 | 14.5 | 2.19 |
| 14 000 | 9 900 | | 5.28 |
| | | | 5.12 |
| | | | 4.79 |

## Ball bearings
## Adapter type

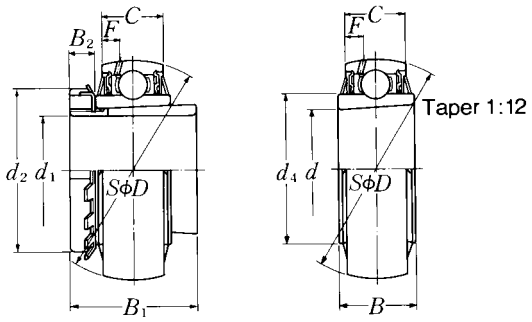


UKX···D1;H, HA, HE, HS  UKX···D1

| Shaft dia. mm / inch | Bearing number 1) 2) | Nominal dimensions mm / inch | | | | | | | | | |
|---|---|---|---|---|---|---|---|---|---|---|---|
| | | $d$ | $D$ | $B$ | $C$ | $d_4$ | $d_1$ | $B_1$ | $B_2$ | $d_2$ | $F$ |
| 65 | UKX15D1;H2315X | 75 | 140 | 45 | 35 | 98.1 | 65 | 73 | 15 | 98 | 9.5 |
| 2 7/16 | UKX15D1;HA2315 | 2.9528 | 5.5118 | 1.7717 | 1.3780 | 3.862 | 2 7/16 | 2.874 | 0.591 | 3.858 | 0.374 |
| 2 1/2 | UKX15D1;HE2315X | | | | | | 2 1/2 | | | | |
| 70 | UKX16D1;H2316X | 80 | 150 | 46 | 36 | 106.4 | 70 | 78 | 17 | 105 | 10.1 |
| 2 11/16 | UKX16D1;HA2316 | 3.1496 | 5.9055 | 1.8110 | 1.4173 | 4.189 | 2 11/16 | 3.071 | 0.669 | 4.134 | 0.398 |
| 2 3/4 | UKX16D1;HE2316X | | | | | | 2 3/4 | | | | |
| 75 | UKX17D1;H2317X | 85 | 160 | 47 | 37 | 111.6 | 75 | 82 | 18 | 110 | 9.8 |
| 2 15/16 | UKX17D1;HA2317X | 3.3465 | 6.2992 | 1.8504 | 1.4567 | 4.394 | 2 15/16 | 3.228 | 0.709 | 4.331 | 0.386 |
| 3 | UKX17D1;HE2317X | | | | | | 3 | | | | |
| 80 | UKX18D1;H2318X | 90 | 170 | 49 | 39 | 118.2 | 80 | 86 | 18 | 120 | 10.5 |
| 3 3/16 | UKX18D1;HA2318X | 3.5433 | 6.6929 | 1.9291 | 1.5354 | 4.654 | 3 3/16 | 3.386 | 0.709 | 4.724 | 0.413 |
| 90 | UKX20D1;H2320X | 100 | 190 | 57 | 44 | 131.3 | 90 | 97 | 20 | 130 | 11.3 |

Remarks: 1) Adapter number with suffix "X" means a narrow slot type adapter sleeve.
In this case the lock washer with the straight inner prong should be used.
2) For HE2311XY, screw thread pitch different from the standard is applied, because of the thin thread section of sleeve.
To distinguish it, a suffix "Y" is added.
3) For inch series bearings, the $f_0$ factor for calculating equivalent radial load is the same as the metric series.

| Basic load ratings | | Factor[3)] | Mass |
|---|---|---|---|
| N<br>dynamic<br>$C_r$ | lbf<br>static<br>$C_{or}$ | $f_0$ | kg lb |
| 72 500 | 53 000 | 14.6 | 3.25 |
| 16 300 | 11 900 | | 7.47<br>7.27 |
| 83 500 | 64 000 | 14.7 | 3.87 |
| 18 700 | 14 300 | | 8.79<br>8.56 |
| 96 000 | 71 500 | 14.5 | 4.53 |
| 21 600 | 16 100 | | 10.6<br>10.3 |
| 109 000 | 82 000 | 14.4 | 5.17 |
| 24 500 | 18 400 | | 11.2 |
| 133 000 | 105 000 | 14.4 | 7.39 |

## Ball bearings
## Set screw type

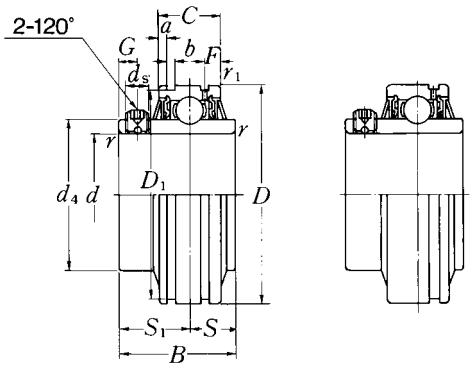


UCS···D1N UCS···D1

| Shaft dia. mm / inch | Bearing number [1] | Nominal dimensions d | D | B | C | mm $r_s$ min. / inch $r_{1s}$ min. | S | $S_1$ | G | ds |
|---|---|---|---|---|---|---|---|---|---|---|
| 12 | UCS201LD1N | 12 | 47 | 31 | 17 | 0.6 | 0.6 | 12.7 | 18.3 | 4.5 | M5 × 0.8 |
| 1/2 | UCS201-008LD1N | 0.5000 | 1.8504 | 1.2205 | 0.6693 | 0.024 | 0.024 | 0.500 | 0.720 | 0.177 | No.10-32UNF |
| 15 | UCS202LD1N | 15 | 47 | 31 | 17 | 0.6 | 0.6 | 12.7 | 18.3 | 4.5 | M5 × 0.8 |
| 9/16 | UCS202-009LD1N | 0.5625 | 1.8504 | 1.2205 | 0.6693 | 0.024 | 0.024 | 0.500 | 0.720 | 0.177 | No.10-32UNF |
| 5/8 | UCS202-010LD1N | 0.6250 | | | | | | | | | |
| 17 | UCS203LD1N | 17 | 47 | 31 | 17 | 0.6 | 0.6 | 12.7 | 18.3 | 4.5 | M5 × 0.8 |
| 11/16 | UCS203-011LD1N | 0.6875 | 1.8504 | 1.2205 | 0.6693 | 0.024 | 0.024 | 0.500 | 0.720 | 0.177 | No.10-32UNF |
| 20 | UCS204LD1N | 20 | 47 | 31 | 17 | 1 | 0.6 | 12.7 | 18.3 | 4.5 | M5 × 0.8 |
| 3/4 | UCS204-012LD1N | 0.7500 | 1.8504 | 1.2205 | 0.6693 | 0.039 | 0.024 | 0.500 | 0.720 | 0.177 | No.10-32UNF |
| 25 | UCS205LD1N | 25 | 52 | 34.1 | 17 | 1 | 0.6 | 14.3 | 19.8 | 5 | M5 × 0.8 |
| 13/16 | UCS205-013LD1N | 0.8125 | 2.0472 | 1.3425 | 0.6693 | 0.039 | 0.024 | 0.563 | 0.780 | 0.197 | No.10-32UNF |
| 7/8 | UCS205-014LD1N | 0.8750 | | | | | | | | | |
| 15/16 | UCS205-015LD1N | 0.9375 | | | | | | | | | |
| 1 | UCS205-100LD1N | 1.0000 | | | | | | | | | |
| 30 | UCS206LD1N | 30 | 62 | 38.1 | 19 | 1 | 1 | 15.9 | 22.2 | 5 | M6 × 0.75 |
| 1 1/16 | UCS206-101LD1N | 1.0625 | 2.4409 | 1.5000 | 0.7480 | 0.039 | 0.039 | 0.626 | 0.874 | 0.197 | 1/4-28UNF |
| 1 1/8 | UCS206-102LD1N | 1.1250 | | | | | | | | | |
| 1 3/16 | UCS206-103LD1N | 1.1875 | | | | | | | | | |
| 1 1/4 | UCS206-104LD1N | 1.2500 | | | | | | | | | |
| 35 | UCS207LD1N | 35 | 72 | 42.9 | 20 | 1.5 | 1.5 | 17.5 | 25.4 | 6 | M6 × 0.75 |
| 1 1/4 | UCS207-104LD1N | 1.2500 | 2.8346 | 1.6890 | 0.7874 | 0.059 | 0.059 | 0.689 | 1.000 | 0.236 | 1/4-28UNF |
| 1 5/16 | UCS207-105LD1N | 1.3125 | | | | | | | | | |
| 1 3/8 | UCS207-106LD1N | 1.3750 | | | | | | | | | |
| 1 7/16 | UCS207-107LD1N | 1.4375 | | | | | | | | | |
| 40 | UCS208LD1N | 40 | 80 | 49.2 | 21 | 1.5 | 1.5 | 19 | 30.2 | 8 | M8 × 1 |
| 1 1/2 | UCS208-108LD1N | 1.5000 | 3.1496 | 1.9370 | 0.8268 | 0.059 | 0.059 | 0.748 | 1.189 | 0.315 | 5/16-24UNF |
| 1 9/16 | UCS208-109LD1N | 1.5625 | | | | | | | | | |
| 45 | UCS209LD1N | 45 | 85 | 49.2 | 22 | 1.5 | 1.5 | 19 | 30.2 | 8 | M8 × 1 |
| 1 5/8 | UCS209-110LD1N | 1.6250 | | | | | | | | | |
| 1 11/16 | UCS209-111LD1N | 1.6875 | 3.3465 | 1.9370 | 0.8661 | 0.059 | 0.059 | 0.748 | 1.189 | 0.315 | 5/16-24UNF |
| 1 3/4 | UCS209-112LD1N | 1.7500 | | | | | | | | | |

Remarks: 1) These numbers indicate relubricatable type. If maintenance free type is needed, please order without suffix "D1".
2) For inch series bearings, the $f_0$ factor for calculating equivalent radial load is the same as the metric series.

| Nominal dimensions | | | | | Basic load ratings | | Factor[2)] | Mass |
|---|---|---|---|---|---|---|---|---|
| mm / inch | | | | | N / lbf | | | kg / lb |
| $d_4$ | $D_1$ | $a$ | $b$ | $F$ | dynamic $C_r$ | static $C_{or}$ | $f_0$ | |
| 29.6 | 44.6 | 3.1 | 1.5 | 4 | 12 800 | 6 650 | 13.2 | 0.21 |
| 1.1654 | 1.756 | 0.122 | 0.059 | 0.157 | 2 890 | 1 500 | | 0.46 |
| 29.6 | 44.6 | 3.1 | 1.5 | 4 | 12 800 | 6 650 | 13.2 | 0.20 |
| 1.1654 | 1.756 | 0.122 | 0.059 | 0.157 | 2 890 | 1 500 | | 0.44<br>0.42 |
| 29.6 | 44.6 | 3.1 | 1.5 | 4 | 12 800 | 6 650 | 13.2 | 0.18 |
| 1.1654 | 1.756 | 0.122 | 0.059 | 0.157 | 2 890 | 1 500 | | 0.39 |
| 29.6 | 44.6 | 3.1 | 1.5 | 4 | 12 800 | 6 650 | 13.2 | 0.17 |
| 1.1654 | 1.756 | 0.122 | 0.059 | 0.157 | 2 890 | 1 500 | | 0.39 |
| 33.9 | 49.73 | 3.2 | 1.5 | 4.1 | 14 000 | 7 850 | 13.9 | 0.20 |
| 1.3346 | 1.958 | 0.126 | 0.059 | 0.161 | 3 150 | 1 770 | | 0.53<br>0.51<br>0.46<br>0.44 |
| 40.8 | 59.61 | 3.2 | 2.05 | 4.2 | 19 500 | 11 300 | 13.8 | 0.34 |
| 1.6063 | 2.374 | 0.126 | 0.081 | 0.165 | 4 400 | 2 540 | | 0.82<br>0.77<br>0.73<br>0.66 |
| 46.8 | 68.81 | 3.3 | 2.05 | 5 | 25 700 | 15 300 | 13.8 | 0.48 |
| 1.8425 | 2.709 | 0.130 | 0.081 | 0.197 | 5 750 | 3 450 | | 1.21<br>1.15<br>1.08<br>1.01 |
| 53 | 76.81 | 3.4 | 2.05 | 5 | 29 100 | 17 800 | 14.0 | 0.64 |
| 2.0866 | 3.024 | 0.134 | 0.081 | 0.197 | 6 550 | 4 000 | | 1.52<br>1.46 |
| 57.5 | 81.81 | 3.5 | 2.05 | 5.1 | 32 500 | 20 400 | 14.1 | 0.70 |
| 2.2638 | 3.221 | 0.138 | 0.081 | 0.201 | 7 350 | 4 600 | | 1.76<br>1.68<br>1.57 |

## Ball bearings
## Set screw type

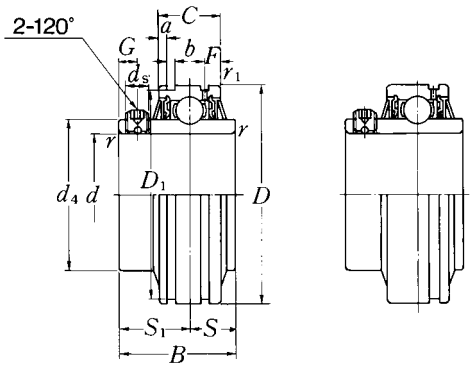


UCS···D1N UCS···D1

| Shaft dia. mm inch | Bearing number [1] | Nominal dimensions d | D | B | C | mm $r_s$ min. | inch $r_{1s}$ min. | S | $S_1$ | G | ds |
|---|---|---|---|---|---|---|---|---|---|---|---|
| 50 | UCS210LD1N | 50 | 90 | 51.6 | 24 | 1.5 | 1.5 | 19 | 32.6 | 9 | M8 × 1 |
| 1 13/16 | UCS210-113LD1N | 1.8125 | | | | | | | | | |
| 1 7/8 | UCS210-114LD1N | 1.8750 | 3.5433 | 2.0315 | 0.9449 | 0.059 | 0.059 | 0.748 | 1.283 | 0.354 | 5/16-24UNF |
| 1 15/16 | UCS210-115LD1N | 1.9375 | | | | | | | | | |
| 2 | UCS210-200LD1N | 2.0000 | | | | | | | | | |
| 55 | UCS211LD1N | 55 | 100 | 55.6 | 25 | 2 | 2 | 22.2 | 33.4 | 9 | M8 × 1 |
| 2 | UCS211-200LD1N | 2.0000 | | | | | | | | | |
| 2 1/16 | UCS211-201LD1N | 2.0625 | 3.9370 | 2.1890 | 0.9843 | 0.079 | 0.079 | 0.874 | 1.315 | 0.354 | 5/16-24UNF |
| 2 1/8 | UCS211-202LD1N | 2.1250 | | | | | | | | | |
| 2 3/16 | UCS211-203LD1N | 2.1875 | | | | | | | | | |
| 60 | UCS212LD1N | 60 | 110 | 65.1 | 27 | 2 | 2 | 25.4 | 39.7 | 10 | M10 × 1.25 |
| 2 1/4 | UCS212-204LD1N | 2.2500 | | | | | | | | | |
| 2 5/16 | UCS212-205LD1N | 2.3125 | 4.3307 | 2.5630 | 1.0630 | 0.079 | 0.079 | 1.000 | 1.563 | 0.394 | 3/8-24UNF |
| 2 3/8 | UCS212-206LD1N | 2.3750 | | | | | | | | | |
| 2 7/16 | UCS212-207LD1N | 2.4375 | | | | | | | | | |
| 65 | UCS213D1 | 65 | 120 | 65.1 | 32 | 2 | 2 | 25.4 | 39.7 | 10 | M10 × 1.25 |
| 2 1/2 | UCS213-208D1 | 2.5000 | 4.7244 | 2.5630 | 1.2598 | 0.079 | 0.079 | 1.000 | 1.563 | 0.394 | 3/8-24UNF |
| 2 9/16 | UCS213-209D1 | 2.5625 | | | | | | | | | |
| 70 | UCS214D1 | 70 | 125 | 74.6 | 33 | 2 | 2 | 30.2 | 44.4 | 12 | M10 × 1.25 |
| 75 | UCS215D1 | 75 | 130 | 77.8 | 34 | 2 | 2 | 33.3 | 44.5 | 12 | M10 × 1.25 |
| 80 | UCS216D1 | 80 | 140 | 82.6 | 35 | 2.5 | 2.5 | 33.3 | 49.3 | 12 | M10 × 1.25 |
| 85 | UCS217D1 | 85 | 150 | 85.7 | 36 | 2.5 | 2.5 | 34.1 | 51.6 | 12 | M12 × 1.5 |
| 90 | UCS218D1 | 90 | 160 | 96 | 37 | 2.5 | 2.5 | 39.7 | 56.3 | 12 | M12 × 1.5 |

Remarks: 1) These numbers indicate relubricatable type. If maintenance free type is needed, please order without suffix "D1".
2) For inch series bearings, the $f_0$ factor for calculating equivalent radial load is the same as the metric series.

| Nominal dimensions | | | | | Basic load ratings | | Factor[2)] | Mass |
|---|---|---|---|---|---|---|---|---|
| mm / inch | | | | | N / lbf | | | kg / lb |
| $d_4$ | $D_1$ | $a$ | $b$ | $F$ | dynamic $C_r$ | static $C_{or}$ | $f_0$ | |
| 62.4 | 86.79 | 3.7 | 2.85 | 5.6 | 35 000 | 23 200 | 14.4 | 0.78 |
| 2.4567 | 3.417 | 0.146 | 0.112 | 0.220 | 7 900 | 5 200 | | 2.03<br>1.92<br>1.81<br>1.69 |
| 69 | 96.80 | 4.4 | 2.85 | 5.9 | 43 500 | 29 200 | 14.3 | 1.06 |
| 2.7165 | 3.811 | 0.173 | 0.112 | 0.232 | 9 750 | 6 550 | | 2.71<br>2.60<br>2.46<br>2.34 |
| 77 | 106.81 | 4.4 | 2.85 | 6 | 52 500 | 36 000 | 14.3 | 1.48 |
| 3.0315 | 4.205 | 0.173 | 0.112 | 0.236 | 11 800 | 8 150 | | 3.78<br>3.62<br>3.45<br>3.29 |
| 82.5 | — | — | — | 6.8 | 57 500 | 40 000 | 14.4 | 1.88 |
| 3.2480 | — | — | — | 0.268 | 12 900 | 9 000 | | 4.41<br>4.24 |
| 87 | — | — | — | 7 | 62 000 | 44 000 | 14.5 | 2.17 |
| 93 | — | — | — | 7 | 66 000 | 49 500 | 14.7 | 2.43 |
| 98.1 | — | — | — | 7.5 | 72 500 | 53 000 | 14.6 | 2.89 |
| 106.4 | — | — | — | 7.5 | 83 500 | 64 000 | 14.7 | 3.47 |
| 111.6 | — | — | — | 7 | 96 000 | 71 500 | 14.5 | 4.24 |

## Ball bearings
## Set screw type

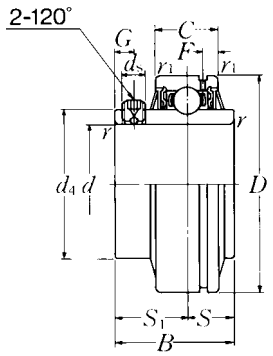


| Shaft dia. mm / inch | Bearing number [1] | Nominal dimensions d | D | B | C | mm $r_s$ min. | inch $r_{1s}$ min. | S | $S_1$ | G | ds |
|---|---|---|---|---|---|---|---|---|---|---|---|
| **25** | **UCS305D1** | 25 | 62 | 38 | 20 | 1.5 | 0.6 | 15 | 23 | 6 | M6 × 0.75 |
| 13/16 | **UCS305-013D1** | 0.8125 | | | | | | | | | |
| 7/8 | **UCS305-014D1** | 0.8750 | 2.4409 | 1.4961 | 0.7874 | 0.059 | 0.024 | 0.591 | 0.906 | 0.236 | 1/4-28UNF |
| 15/16 | **UCS305-015D1** | 0.9375 | | | | | | | | | |
| **1** | **UCS305-100D1** | 1.0000 | | | | | | | | | |
| **30** | **UCS306D1** | 30 | 72 | 43 | 23 | 1.5 | 1 | 17 | 26 | 6 | M6 × 0.75 |
| 1 1/16 | **UCS306-101D1** | 1.0625 | | | | | | | | | |
| 1 1/8 | **UCS306-102D1** | 1.1250 | 2.8346 | 1.6929 | 0.9055 | 0.059 | 0.039 | 0.669 | 1.024 | 0.236 | 1/4-28UNF |
| 1 3/16 | **UCS306-103D1** | 1.1875 | | | | | | | | | |
| **35** | **UCS307D1** | 35 | 80 | 48 | 25 | 2 | 1 | 19 | 29 | 8 | M8 × 1 |
| 1 1/4 | **UCS307-104D1** | 1.2500 | | | | | | | | | |
| 1 5/16 | **UCS307-105D1** | 1.3125 | 3.1496 | 1.8898 | 0.9843 | 0.079 | 0.039 | 0.748 | 1.142 | 0.315 | 5/16-24UNF |
| 1 3/8 | **UCS307-106D1** | 1.3750 | | | | | | | | | |
| 1 7/16 | **UCS307-107D1** | 1.4375 | | | | | | | | | |
| **40** | **UCS308D1** | 40 | 90 | 52 | 27 | 2 | 1 | 19 | 33 | 10 | M10 × 1.25 |
| 1 1/2 | **UCS308-108D1** | 1.5000 | 3.5433 | 2.0472 | 1.0630 | 0.079 | 0.039 | 0.748 | 1.299 | 0.394 | 3/8-24UNF |
| 1 9/16 | **UCS308-109D1** | 1.5625 | | | | | | | | | |
| **45** | **UCS309D1** | 45 | 100 | 57 | 29 | 2 | 1 | 22 | 35 | 10 | M10 × 1.25 |
| 1 5/8 | **UCS309-110D1** | 1.6250 | | | | | | | | | |
| 1 11/16 | **UCS309-111D1** | 1.6875 | 3.9370 | 2.2441 | 1.1417 | 0.079 | 0.039 | 0.866 | 1.378 | 0.394 | 3/8-24UNF |
| 1 3/4 | **UCS309-112D1** | 1.7500 | | | | | | | | | |
| **50** | **UCS310D1** | 50 | 110 | 61 | 32 | 2.5 | 1.5 | 22 | 39 | 12 | M12 × 1.5 |
| 1 13/16 | **UCS310-113D1** | 1.8125 | | | | | | | | | |
| 1 7/8 | **UCS310-114D1** | 1.8750 | 4.3307 | 2.4016 | 1.2598 | 0.098 | 0.059 | 0.866 | 1.535 | 0.472 | 1/2-20UNF |
| 1 15/16 | **UCS310-115D1** | 1.9375 | | | | | | | | | |
| **55** | **UCS311D1** | 55 | 120 | 66 | 34 | 2.5 | 1.5 | 25 | 41 | 12 | M12 × 1.5 |
| **2** | **UCS311-200D1** | 2.0000 | | | | | | | | | |
| 2 1/16 | **UCS311-201D1** | 2.0625 | 4.7244 | 2.5984 | 1.3386 | 0.098 | 0.059 | 0.984 | 1.614 | 0.472 | 1/2-20UNF |
| 2 1/8 | **UCS311-202D1** | 2.1250 | | | | | | | | | |
| 2 3/16 | **UCS311-203D1** | 2.1875 | | | | | | | | | |

Remarks: 1) These numbers indicate relubricatable type. If maintenance free type is needed, please order without suffix "D1".
2) For inch series bearings, the $f_0$ factor for calculating equivalent radial load is the same as the metric series.

| Nominal dimensions | | Basic load ratings | | Factor[2)] | Mass |
|---|---|---|---|---|---|
| mm | inch | N | lbf | | kg lb |
| | | dynamic | static | | |
| $B_5$ | $F$ | $C_r$ | $C_{or}$ | $f_0$ | |
| 36.8 | 4.3 | 21 200 | 10 900 | 12.6 | 0.37 |
| 1.4488 | 0.169 | 4 750 | 2 460 | | 0.94 |
| | | | | | 0.90 |
| | | | | | 0.83 |
| | | | | | 0.81 |
| 44.9 | 5.1 | 26 700 | 15 000 | 13.3 | 0.58 |
| 1.7677 | 0.201 | 6 000 | 3 400 | | 1.39 |
| | | | | | 1.33 |
| | | | | | 1.28 |
| 49.4 | 5.3 | 33 500 | 19 100 | 13.1 | 0.74 |
| 1.9449 | 0.209 | 7 500 | 4 300 | | 1.77 |
| | | | | | 1.70 |
| | | | | | 1.64 |
| | | | | | 1.57 |
| 56 | 5.6 | 40 500 | 24 000 | 13.2 | 1.00 |
| 2.2047 | 0.220 | 9 150 | 5 400 | | 2.32 |
| | | | | | 2.23 |
| 63.5 | 5.8 | 53 000 | 32 000 | 13.1 | 1.33 |
| 2.5000 | 0.228 | 11 900 | 7 200 | | 3.17 |
| | | | | | 3.09 |
| | | | | | 2.98 |
| 70.6 | 6.3 | 62 000 | 38 500 | 13.2 | 1.72 |
| 2.7795 | 0.248 | 13 900 | 8 600 | | 4.10 |
| | | | | | 3.99 |
| | | | | | 3.85 |
| 76.6 | 6.5 | 71 500 | 45 000 | 13.2 | 2.15 |
| 3.0157 | 0.256 | 16 100 | 10 100 | | 5.14 |
| | | | | | 4.99 |
| | | | | | 4.85 |
| | | | | | 4.68 |

## Ball bearings
## Set screw type

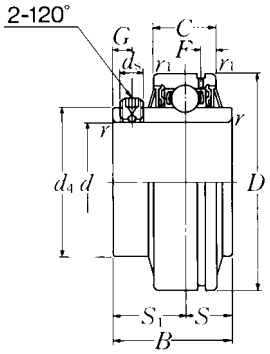


| Shaft dia. mm / inch | Bearing number [1] | Nominal dimensions d | D | B | C | mm $r_s$ min. | inch $r_{1s}$ min. | S | $S_1$ | G | ds |
|---|---|---|---|---|---|---|---|---|---|---|---|
| 60 | UCS312D1 | 60 | 130 | 71 | 36 | 2.5 | 1.5 | 26 | 45 | 12 | M12 × 1.5 |
| 2 1/4 | UCS312-204D1 | 2.2500 | | | | | | | | | |
| 2 5/16 | UCS312-205D1 | 2.3125 | 5.1181 | 2.7953 | 1.4173 | 0.098 | 0.059 | 1.024 | 1.772 | 0.472 | 1/2-20UNF |
| 2 3/8 | UCS312-206D1 | 2.3750 | | | | | | | | | |
| 2 7/16 | UCS312-207D1 | 2.4375 | | | | | | | | | |
| 65 | UCS313D1 | 65 | 140 | 75 | 39 | 2.5 | 2 | 30 | 45 | 12 | M12 × 1.5 |
| 2 1/2 | UCS313-208D1 | 2.5000 | 5.5118 | 2.9528 | 1.5354 | 0.098 | 0.079 | 1.181 | 1.772 | 0.472 | 1/2-20UNF |
| 2 9/16 | UCS313-209D1 | 2.5625 | | | | | | | | | |
| 70 | UCS314D1 | 70 | 150 | 78 | 41 | 2.5 | 2 | 33 | 45 | 12 | M12 × 1.5 |
| 2 5/8 | UCS314-210D1 | 2.6250 | | | | | | | | | |
| 2 11/16 | UCS314-211D1 | 2.6875 | 5.9055 | 3.0709 | 1.6142 | 0.098 | 0.079 | 1.299 | 1.772 | 0.472 | 1/2-20UNF |
| 2 3/4 | UCS314-212D1 | 2.7500 | | | | | | | | | |
| 75 | UCS315D1 | 75 | 160 | 82 | 43 | 2.5 | 2 | 32 | 50 | 14 | M14 × 1.5 |
| 2 13/16 | UCS315-213D1 | 2.8125 | | | | | | | | | |
| 2 7/8 | UCS315-214D1 | 2.8750 | 6.2992 | 3.2283 | 1.6929 | 0.098 | 0.079 | 1.260 | 1.969 | 0.551 | 9/16-18UNF |
| 2 15/16 | UCS315-215D1 | 2.9375 | | | | | | | | | |
| 3 | UCS315-300D1 | 3.0000 | | | | | | | | | |
| 80 | UCS316D1 | 80 | 170 | 86 | 45 | 2.5 | 2 | 34 | 52 | 14 | M14 × 1.5 |
| 3 1/16 | UCS316-301D1 | 3.0625 | | | | | | | | | |
| 3 1/8 | UCS316-302D1 | 3.1250 | 6.6929 | 3.3858 | 1.7717 | 0.098 | 0.079 | 1.339 | 2.047 | 0.551 | 9/16-18UNF |
| 3 3/16 | UCS316-303D1 | 3.1875 | | | | | | | | | |
| 85 | UCS317D1 | 85 | 180 | 96 | 47 | 3 | 2.5 | 40 | 56 | 16 | M16 × 1.5 |
| 3 1/4 | UCS317-304D1 | 3.2500 | | | | | | | | | |
| 3 5/16 | UCS317-305D1 | 3.3125 | 7.0866 | 3.7795 | 1.8504 | 0.118 | 0.098 | 1.575 | 2.205 | 0.630 | 5/8-18UNF |
| 3 7/16 | UCS317-307D1 | 3.4375 | | | | | | | | | |
| 90 | UCS318D1 | 90 | 190 | 96 | 49 | 3 | 2.5 | 40 | 56 | 16 | M16 × 1.5 |
| 3 7/16 | UCS318-307D1 | 3.4375 | 7.4803 | 3.7795 | 1.9291 | 0.118 | 0.098 | 1.575 | 2.205 | 0.630 | 5/8-18UNF |
| 3 1/2 | UCS318-308D1 | 3.5000 | | | | | | | | | |

Remarks: 1) These numbers indicate relubricatable type. If maintenance free type is needed, please order without suffix "D1".
2) For inch series bearings, the $f_0$ factor for calculating equivalent radial load is the same as the metric series.

| Nominal dimensions | | Basic load ratings | | Factor[2)] | Mass |
|---|---|---|---|---|---|
| mm | inch | N | lbf | | kg lb |
| | | dynamic | static | | |
| $B_5$ | $F$ | $C_r$ | $C_{or}$ | $f_0$ | |
| 82.7 | 6.7 | 82 000 | 52 000 | 13.2 | 2.70 |
| | | | | | 6.27 |
| 3.2559 | 0.264 | 18 400 | 11 700 | | 6.10 |
| | | | | | 5.89 |
| | | | | | 5.72 |
| 88.2 | 7.5 | 92 500 | 60 000 | 13.2 | 3.37 |
| 3.4724 | 0.295 | 20 800 | 13 400 | | 7.63 |
| | | | | | 7.41 |
| 94.8 | 7.5 | 104 000 | 68 000 | 13.2 | 4.03 |
| | | | | | 9.37 |
| 3.7323 | 0.295 | 23 400 | 15 300 | | 9.13 |
| | | | | | 8.91 |
| 101.3 | 7.7 | 113 000 | 77 000 | 13.2 | 4.88 |
| | | | | | 11.4 |
| 3.9882 | 0.303 | 25 500 | 17 400 | | 11.1 |
| | | | | | 10.9 |
| | | | | | 10.6 |
| 107.9 | 7.8 | 123 000 | 86 500 | 13.3 | 5.74 |
| | | | | | 13.0 |
| 4.2480 | 0.307 | 27 600 | 19 500 | | 12.7 |
| | | | | | 12.5 |
| 114.4 | 8.2 | 133 000 | 97 000 | 13.3 | 6.88 |
| | | | | | 15.7 |
| 4.5039 | 0.323 | 29 800 | 21 800 | | 15.4 |
| | | | | | 14.7 |
| 120.9 | 8.5 | 143 000 | 107 000 | 13.3 | 7.80 |
| 4.7598 | 0.335 | 32 000 | 24 100 | | 17.8 |
| | | | | | 17.4 |

## Ball bearings
## Set screw type

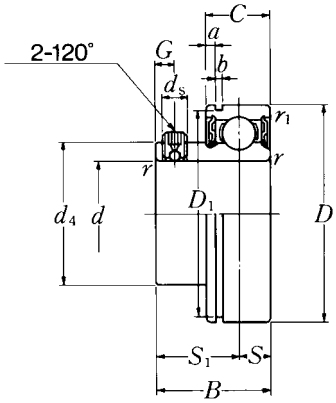


| Shaft dia. mm / inch | Bearing number[1)] | Nominal dimensions d | D | B | C | $r_s$ min. | $r_{1s}$ min. | S | $S_1$ | G | ds | $d_4$ |
|---|---|---|---|---|---|---|---|---|---|---|---|---|
| | | mm | | | | mm | | inch | | | | |
| **12** | **ASS201N** | 12 | 40 | 22 | 12 | 0.6 | 0.6 | 6 | 16 | 4.2 | M5 × 0.8 | 24.3 |
| 1/2 | **ASS201-008N** | 0.5000 | 1.5748 | 0.8661 | 0.4724 | 0.024 | 0.024 | 0.236 | 0.630 | 0.165 | No.10-32UNF | 0.957 |
| **15** | **ASS202N** | 15 | 40 | 22 | 12 | 0.6 | 0.6 | 6 | 16 | 4.2 | M5 × 0.8 | 24.3 |
| 9/16 | **ASS202-009N** | 0.5625 | 1.5748 | 0.8661 | 0.4724 | 0.024 | 0.024 | 0.236 | 0.630 | 0.165 | No.10-32UNF | 0.957 |
| 5/8 | **ASS202-010N** | 0.6250 | | | | | | | | | | |
| **17** | **ASS203N** | 17 | 40 | 22 | 12 | 0.6 | 0.6 | 6 | 16 | 4.2 | M5 × 0.8 | 24.3 |
| 11/16 | **ASS203-011N** | 0.6875 | 1.5748 | 0.8661 | 0.4724 | 0.024 | 0.024 | 0.236 | 0.630 | 0.165 | No.10-32UNF | 0.957 |
| **20** | **ASS204N** | 20 | 47 | 25 | 14 | 1 | 0.6 | 7 | 18 | 4.2 | M5 × 0.8 | 29.6 |
| 3/4 | **ASS204-012N** | 0.7500 | 1.8504 | 0.9843 | 0.5512 | 0.039 | 0.024 | 0.276 | 0.709 | 0.165 | No.10-32UNF | 1.165 |
| **25** | **ASS205N** | 25 | 52 | 27 | 15 | 1 | 0.6 | 7.5 | 19.5 | 5 | M5 × 0.8 | 33.9 |
| 13/16 | **ASS205-013N** | 0.8125 | | | | | | | | | | |
| 7/8 | **ASS205-014N** | 0.8750 | 2.0472 | 1.0630 | 0.5906 | 0.039 | 0.024 | 0.295 | 0.768 | 0.197 | No.10-32UNF | 1.335 |
| 15/16 | **ASS205-015N** | 0.9375 | | | | | | | | | | |
| **1** | **ASS205-100N** | 1.0000 | | | | | | | | | | |
| **30** | **ASS206N** | 30 | 62 | 29 | 16 | 1 | 0.6 | 8 | 21 | 5 | M6 × 0.75 | 40.8 |
| 1 1/16 | **ASS206-101N** | 1.0625 | | | | | | | | | | |
| 1 1/8 | **ASS206-102N** | 1.1250 | 2.4409 | 1.1417 | 0.6299 | 0.039 | 0.024 | 0.315 | 0.827 | 0.197 | 1/4-28UNF | 1.606 |
| 1 3/16 | **ASS206-103N** | 1.1875 | | | | | | | | | | |
| 1 1/4 | **ASS206-104N** | 1.2500 | | | | | | | | | | |
| **35** | **ASS207N** | 35 | 72 | 34 | 17 | 1.5 | 0.6 | 8.5 | 25.5 | 6 | M6 × 0.75 | 46.8 |
| 1 1/4 | **ASS207-104N** | 1.2500 | | | | | | | | | | |
| 1 5/16 | **ASS207-105N** | 1.3125 | 2.8346 | 1.3386 | 0.6693 | 0.059 | 0.024 | 0.335 | 1.004 | 0.236 | 1/4-28UNF | 1.843 |
| 1 3/8 | **ASS207-106N** | 1.3750 | | | | | | | | | | |
| 1 7/16 | **ASS207-107N** | 1.4375 | | | | | | | | | | |
| **40** | **ASS208N** | 40 | 80 | 38 | 18 | 1.5 | 0.6 | 9 | 29 | 8 | M8 × 1 | 53 |
| 1 1/2 | **ASS208-108N** | 1.5000 | 3.1496 | 1.4961 | 0.7087 | 0.059 | 0.024 | 0.354 | 1.142 | 0.315 | 5/16-24UNF | 2.087 |
| 1 9/16 | **ASS208-109N** | 1.5625 | | | | | | | | | | |

Remarks: 1) If relubricatable type is needed, please order with suffix "D1".
2) For inch series bearings, the $f_0$ factor for calculating equivalent radial load is the same as the metric series.

| Nominal dimensions | | | Basic load ratings | | Factor [2] | Mass |
|---|---|---|---|---|---|---|
| mm / inch | | | N / lbf | | | kg / lb |
| $D_1$ | $a$ | $b$ | dynamic $C_r$ | static $C_{or}$ | $f_0$ | |
| 38.1 | 1.98 | 1.5 | 9 600 | 4 600 | 12.8 | 0.12 |
| 1.500 | 0.078 | 0.059 | 2 160 | 1 030 | | 0.24 |
| 38.1 | 1.98 | 1.5 | 9 600 | 4 600 | 12.8 | 0.11 |
| 1.500 | 0.078 | 0.059 | 2 160 | 1 030 | | 0.23 |
| | | | | | | 0.22 |
| 38.1 | 1.98 | 1.5 | 9 600 | 4 600 | 12.8 | 0.10 |
| 1.500 | 0.078 | 0.059 | 2 160 | 1 030 | | 0.20 |
| 44.6 | 2.38 | 1.5 | 12 800 | 6 650 | 13.2 | 0.17 |
| 1.756 | 0.094 | 0.059 | 2 890 | 1 500 | | 0.33 |
| 49.73 | 2.38 | 1.5 | 14 000 | 7 850 | 13.9 | 0.17 |
| | | | | | | 0.46 |
| 1.958 | 0.094 | 0.059 | 3 150 | 1 770 | | 0.44 |
| | | | | | | 0.42 |
| | | | | | | 0.39 |
| 59.61 | 3.18 | 2.05 | 19 500 | 11 300 | 13.8 | 0.31 |
| | | | | | | 0.67 |
| 2.347 | 0.125 | 0.081 | 4 400 | 2 540 | | 0.65 |
| | | | | | | 0.63 |
| | | | | | | 0.61 |
| 68.81 | 3.18 | 2.05 | 25 700 | 15 300 | 13.8 | 0.49 |
| | | | | | | 1.18 |
| 2.709 | 0.125 | 0.081 | 5 750 | 3 450 | | 1.05 |
| | | | | | | 0.93 |
| | | | | | | 0.81 |
| 76.81 | 3.18 | 2.05 | 29 100 | 17 800 | 14.0 | 0.50 |
| 3.024 | 0.125 | 0.081 | 6 550 | 4 000 | | 1.15 |
| | | | | | | 1.06 |

## Ball bearings
## Set screw type

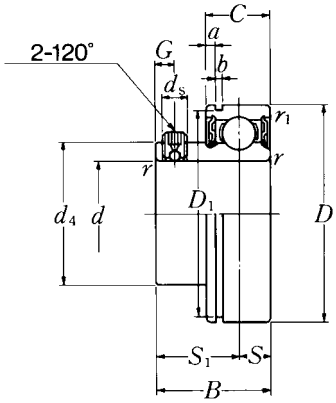


| Shaft dia. mm / inch | Bearing number[1)] | Nominal dimensions | | | | | | | | | | |
|---|---|---|---|---|---|---|---|---|---|---|---|---|
| | | mm | | | | | | inch | | | | |
| | | $d$ | $D$ | $B$ | $C$ | $r_s$ min. | $r_{1s}$ min. | $S$ | $S_1$ | $G$ | $ds$ | $d_4$ |
| **45** | **ASS209N** | 45 | 85 | 40 | 19 | 1.5 | 1.5 | 9.5 | 30.5 | 8 | M8 × 1 | 57.5 |
| **1 5/8** | **ASS209-110N** | 1.6250 | | | | | | | | | | |
| **1 11/16** | **ASS209-111N** | 1.6875 | 3.3465 | 1.5748 | 0.7480 | 0.059 | 0.059 | 0.374 | 1.201 | 0.315 | 5/16-24UNF | 2.264 |
| **1 3/4** | **ASS209-112N** | 1.7500 | | | | | | | | | | |
| **50** | **ASS210N** | 50 | 90 | 42 | 20 | 1.5 | 1.5 | 10 | 32 | 9 | M8 × 1 | 62.4 |
| **1 13/16** | **ASS210-113N** | 1.8125 | | | | | | | | | | |
| **1 7/8** | **ASS210-114N** | 1.8750 | 3.5433 | 1.6535 | 0.7874 | 0.059 | 0.059 | 0.394 | 1.260 | 0.354 | 5/16-24UNF | 2.457 |
| **1 15/16** | **ASS210-115N** | 1.9375 | | | | | | | | | | |
| **2** | **ASS210-200N** | 2.0000 | | | | | | | | | | |

Remarks: 1) If relubricatable type is needed, please order with suffix "D1".
2) For inch series bearings, the $f_0$ factor for calculating equivalent radial load is the same as the metric series.

| Nominal dimensions | | | Basic load ratings | | Factor [2] | Mass |
|---|---|---|---|---|---|---|
| mm / inch | | | N / lbf | | | kg / lb |
| $D_1$ | $a$ | $b$ | dynamic $C_r$ | static $C_{or}$ | $f_0$ | |
| 81.81 | 3.18 | 2.05 | 32 500 | 20 400 | 14.1 | 0.56 |
| 3.221 | 0.125 | 0.081 | 7 350 | 4 600 | | 1.41<br>1.34<br>1.26 |
| 86.79 | 3.18 | 2.85 | 35 000 | 23 200 | 14.4 | 0.67 |
| 3.417 | 0.125 | 0.112 | 7 900 | 5 200 | | 1.70<br>1.61<br>1.52<br>1.43 |

## Ball bearings
## Eccentric locking collar type

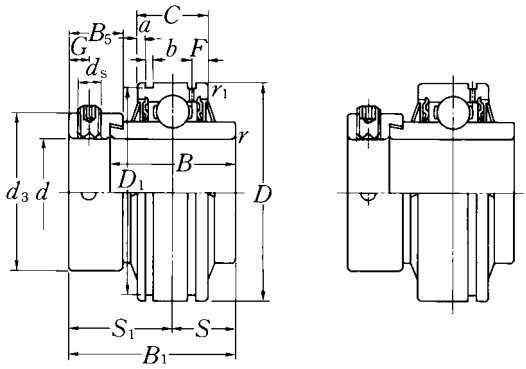


UELS···D1N UELS···D1

| Shaft dia. mm / inch | Bearing number [1] | Nominal dimensions d | D | B1 | B | C | rs min. | r1s min. | S | S1 | G |
|---|---|---|---|---|---|---|---|---|---|---|---|
| | | mm / inch | | | | | | | | | |
| **20** | **UELS204LD1NW3** | 20 | 47 | 43.7 | 34.2 | 17 | 1 | 0.6 | 17.1 | 26.6 | 4.8 |
| 3/4 | **UELS204-012LD1NW3** | 0.7500 | 1.8504 | 1.720 | 1.3465 | 0.6693 | 0.039 | 0.024 | 0.673 | 1.047 | 0.189 |
| **25** | **UELS205LD1NW3** | 25 | 52 | 44.4 | 34.9 | 17 | 1 | 0.6 | 17.45 | 26.9 | 4.8 |
| 13/16 | **UELS205-013LD1NW3** | 0.8125 | | | | | | | | | |
| 7/8 | **UELS205-014LD1NW3** | 0.8750 | 2.0472 | 1.748 | 1.3740 | 0.6693 | 0.039 | 0.024 | 0.687 | 1.059 | 0.189 |
| 15/16 | **UELS205-015LD1NW3** | 0.9375 | | | | | | | | | |
| **1** | **UELS205-100LD1NW3** | 1.0000 | | | | | | | | | |
| **30** | **UELS206LD1NW3** | 30 | 62 | 48.4 | 36.5 | 19 | 1 | 1 | 18.25 | 30.1 | 6 |
| 1 1/16 | **UELS206-101LD1NW3** | 1.0625 | | | | | | | | | |
| 1 1/8 | **UELS206-102LD1NW3** | 1.1250 | 2.4409 | 1.906 | 1.4370 | 0.7480 | 0.039 | 0.039 | 0.719 | 1.185 | 0.236 |
| 1 3/16 | **UELS206-103LD1NW3** | 1.1875 | | | | | | | | | |
| 1 1/4 | **UELS206-104LD1NW3** | 1.2500 | | | | | | | | | |
| **35** | **UELS207LD1NW3** | 35 | 72 | 51.1 | 37.6 | 20 | 1.5 | 1.5 | 18.8 | 32.3 | 6.8 |
| 1 1/4 | **UELS207-104LD1NW3** | 1.2500 | | | | | | | | | |
| 1 5/16 | **UELS207-105LD1NW3** | 1.3125 | 2.8346 | 2.012 | 1.4803 | 0.7874 | 0.059 | 0.059 | 0.740 | 1.272 | 0.268 |
| 1 3/8 | **UELS207-106LD1NW3** | 1.3750 | | | | | | | | | |
| 1 7/16 | **UELS207-107LD1NW3** | 1.4375 | | | | | | | | | |
| **40** | **UELS208LD1NW3** | 40 | 80 | 56.3 | 42.8 | 21 | 1.5 | 1.5 | 21.4 | 34.9 | 6.8 |
| 1 1/2 | **UELS208-108LD1NW3** | 1.5000 | 3.1496 | 2.217 | 1.6850 | 0.8268 | 0.059 | 0.059 | 0.843 | 1.374 | 0.268 |
| 1 9/16 | **UELS208-109LD1NW3** | 1.5625 | | | | | | | | | |
| **45** | **UELS209LD1NW3** | 45 | 85 | 56.3 | 42.8 | 22 | 1.5 | 1.5 | 21.4 | 34.9 | 6.8 |
| 1 5/8 | **UELS209-110LD1NW3** | 1.6250 | | | | | | | | | |
| 1 11/16 | **UELS209-111LD1NW3** | 1.6875 | 3.3465 | 2.217 | 1.6850 | 0.8661 | 0.059 | 0.059 | 0.843 | 1.374 | 0.268 |
| 1 3/4 | **UELS209-112LD1NW3** | 1.7500 | | | | | | | | | |
| **50** | **UELS210LD1NW3** | 50 | 90 | 62.7 | 49.2 | 24 | 1.5 | 1.5 | 24.6 | 38.1 | 6.8 |
| 1 13/16 | **UELS210-113LD1NW3** | 1.8125 | | | | | | | | | |
| 1 7/8 | **UELS210-114LD1NW3** | 1.8750 | 3.5433 | 2.469 | 1.9370 | 0.9449 | 0.059 | 0.059 | 0.969 | 1.500 | 0.268 |
| 1 15/16 | **UELS210-115LD1NW3** | 1.9375 | | | | | | | | | |
| **2** | **UELS210-200LD1NW3** | 2.0000 | | | | | | | | | |

Remarks: 1) These numbers indicate relubricatable type. If maintenance free type is needed, please order without suffix "D1".
2) For inch series bearings, the $f_0$ factor for calculating equivalent radial load is the same as the metric series.

| Nominal dimensions | | | | | | | Basic load ratings | | Factor[2)] | Mass |
|---|---|---|---|---|---|---|---|---|---|---|
| | | mm | inch | | | | N | lbf | | kg lb |
| $d_s$ | $d_3$ | $B_5$ | $D_1$ | $a$ | $b$ | $F$ | dynamic $C_r$ | static $C_{or}$ | $f_0$ | |
| M6 × 0.75 | 33 | 13.5 | 44.6 | 3.1 | 1.5 | 4 | 12 800 | 6 650 | 13.2 | 0.23 |
| 1/4-28UNF | 1.299 | 0.531 | 1.756 | 0.122 | 0.059 | 0.157 | 2 890 | 1 500 | | 0.45 |
| M6 × 0.75 | 38 | 13.5 | 49.73 | 3.2 | 1.5 | 4.1 | 14 000 | 7 850 | 13.9 | 0.27 |
| | | | | | | | | | | 0.61 |
| 1/4-28UNF | 1.496 | 0.531 | 1.958 | 0.126 | 0.059 | 0.161 | 3 150 | 1 770 | | 0.58 |
| | | | | | | | | | | 0.55 |
| | | | | | | | | | | 0.51 |
| M8 × 1 | 44.5 | 15.9 | 59.61 | 3.2 | 2.05 | 4.2 | 19 500 | 11 300 | 13.8 | 0.41 |
| | | | | | | | | | | 0.94 |
| 5/16-24UNF | 1.752 | 0.626 | 2.347 | 0.126 | 0.081 | 0.165 | 4 400 | 2 540 | | 0.89 |
| | | | | | | | | | | 0.84 |
| | | | | | | | | | | 0.80 |
| M10 × 1.25 | 55.5 | 17.5 | 68.81 | 3.3 | 2.05 | 5 | 25 700 | 15 300 | 13.8 | 0.60 |
| | | | | | | | | | | 1.45 |
| 3/8-24UNF | 2.185 | 0.689 | 2.709 | 0.130 | 0.081 | 0.197 | 5 750 | 3 450 | | 1.40 |
| | | | | | | | | | | 1.35 |
| | | | | | | | | | | 1.28 |
| M10 × 1.25 | 60 | 18.3 | 76.81 | 3.4 | 2.05 | 5 | 29 100 | 17 800 | 14.0 | 0.79 |
| 3/8-24UNF | 2.362 | 0.720 | 3.024 | 0.134 | 0.081 | 0.197 | 6 550 | 4 000 | | 1.90 |
| | | | | | | | | | | 1.82 |
| M10 × 1.25 | 63.5 | 18.3 | 81.81 | 3.5 | 2.05 | 5.1 | 32 500 | 20 400 | 14.1 | 0.85 |
| | | | | | | | | | | 2.05 |
| 3/8-24UNF | 2.500 | 0.720 | 3.221 | 0.138 | 0.081 | 0.201 | 7 350 | 4 600 | | 1.97 |
| | | | | | | | | | | 1.88 |
| M10 × 1.25 | 69.5 | 18.3 | 86.79 | 3.7 | 2.85 | 5.6 | 35 000 | 23 200 | 14.4 | 0.98 |
| | | | | | | | | | | 2.46 |
| 3/8-24UNF | 2.736 | 0.720 | 3.417 | 0.146 | 0.112 | 0.220 | 7 900 | 5 200 | | 2.36 |
| | | | | | | | | | | 2.25 |
| | | | | | | | | | | 2.09 |

## Ball bearings
## Eccentric locking collar type

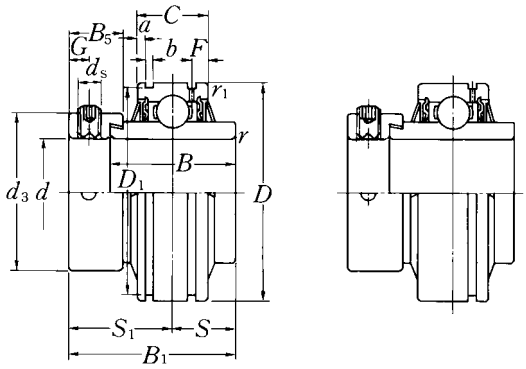


UELS···D1N UELS···D1

| Shaft dia. mm / inch | Bearing number [1] | Nominal dimensions d | D | B1 | B | C | rs min. | r1s min. | S | S1 | G |
|---|---|---|---|---|---|---|---|---|---|---|---|
| | | mm | | | | | inch | | | | |
| 55 | UELS211LD1NW3 | 55 | 100 | 71.4 | 55.5 | 25 | 2 | 2 | 27.75 | 43.6 | 8 |
| 2 | UELS211-200LD1NW3 | 2.0000 | 3.9370 | 2.811 | 2.1850 | 0.9843 | 0.079 | 0.079 | 1.093 | 1.717 | 0.315 |
| 2 1/16 | UELS211-201LD1NW3 | 2.0625 | | | | | | | | | |
| 2 1/8 | UELS211-202LD1NW3 | 2.1250 | | | | | | | | | |
| 2 3/16 | UELS211-203LD1NW3 | 2.1875 | | | | | | | | | |
| 60 | UELS212LD1NW3 | 60 | 110 | 77.8 | 61.9 | 27 | 2 | 2 | 30.95 | 46.8 | 8 |
| 2 1/4 | UELS212-204LD1NW3 | 2.2500 | 4.3307 | 3.063 | 2.4370 | 1.0630 | 0.079 | 0.079 | 1.219 | 1.843 | 0.315 |
| 2 5/16 | UELS212-205LD1NW3 | 2.3125 | | | | | | | | | |
| 2 3/8 | UELS212-206LD1NW3 | 2.3750 | | | | | | | | | |
| 2 7/16 | UELS212-207LD1NW3 | 2.4375 | | | | | | | | | |

Remarks: 1) These numbers indicate relubricatable type. If maintenance free type is needed, please order without suffix "D1".
2) For inch series bearings, the $f_0$ factor for calculating equivalent radial load is the same as the metric series.

| Nominal dimensions | | | | | | | Basic load ratings | | Factor[2)] | Mass |
|---|---|---|---|---|---|---|---|---|---|---|
| | | mm | inch | | | | N | lbf | | kg lb |
| $d_s$ | $d_3$ | $B_5$ | $D_1$ | $a$ | $b$ | $F$ | dynamic $C_r$ | static $C_{or}$ | $f_0$ | |
| M10 × 1.25 | 76 | 20.7 | 96.80 | 4.4 | 2.85 | 5.9 | 43 500 | 29 200 | 14.3 | 1.32 |
| | | | | | | | | | | 3.28 |
| 3/8-24UNF | 2.992 | 0.815 | 3.811 | 0.173 | 0.112 | 0.232 | 9 750 | 6 550 | | 3.12 |
| | | | | | | | | | | 3.02 |
| | | | | | | | | | | 2.90 |
| M10 × 1.25 | 84 | 22.3 | 106.81 | 4.4 | 2.85 | 6 | 52 500 | 36 000 | 14.3 | 1.93 |
| | | | | | | | | | | 4.50 |
| 3/8-24UNF | 3.307 | 0.878 | 4.205 | 0.173 | 0.112 | 0.236 | 11 800 | 8 150 | | 4.34 |
| | | | | | | | | | | 4.17 |
| | | | | | | | | | | 4.00 |

## Ball bearings
## Eccentric locking collar type

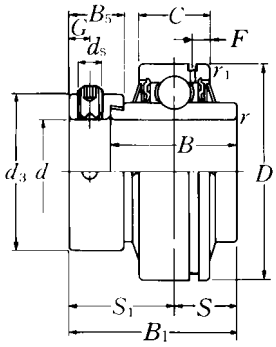


| Shaft dia. mm / inch | Bearing number [1] | Nominal dimensions $d$ | $D$ | $B_1$ | $B$ | $C$ (mm) | $r_s$ min. (mm) | $r_{1s}$ min. (mm) | $S$ | $S_1$ | $G$ | $ds$ |
|---|---|---|---|---|---|---|---|---|---|---|---|---|
| **25** | **UELS305D1W3** | 25 | 62 | 46.8 | 34.9 | 20 | 1.5 | 0.6 | 16.7 | 30.1 | 6 | M8 × 1 |
| 13/16 | **UELS305-013D1W3** | 0.8125 | | | | | | | | | | |
| 7/8 | **UELS305-014D1W3** | 0.8750 | 2.4409 | 1.843 | 1.3740 | 0.7874 | 0.059 | 0.024 | 0.657 | 1.185 | 0.236 | 5/16-24UNF |
| 15/16 | **UELS305-015D1W3** | 0.9375 | | | | | | | | | | |
| **1** | **UELS305-100D1W3** | 1.0000 | | | | | | | | | | |
| **30** | **UELS306D1W3** | 30 | 72 | 50 | 36.5 | 23 | 1.5 | 1 | 17.5 | 32.5 | 6.7 | M8 × 1 |
| 1 1/16 | **UELS306-101D1W3** | 1.0625 | | | | | | | | | | |
| 1 1/8 | **UELS306-102D1W3** | 1.1250 | 2.8346 | 1.969 | 1.4370 | 0.9055 | 0.059 | 0.039 | 0.689 | 1.280 | 0.264 | 5/16-24UNF |
| 1 3/16 | **UELS306-103D1W3** | 1.1875 | | | | | | | | | | |
| **35** | **UELS307D1W3** | 35 | 80 | 51.6 | 38.1 | 25 | 2 | 1 | 18.3 | 33.3 | 6.7 | M8 × 1 |
| 1 1/4 | **UELS307-104D1W3** | 1.2500 | | | | | | | | | | |
| 1 5/16 | **UELS307-105D1W3** | 1.3125 | 3.1496 | 2.031 | 1.5000 | 0.9843 | 0.079 | 0.039 | 0.720 | 1.311 | 0.264 | 5/16-24UNF |
| 1 3/8 | **UELS307-106D1W3** | 1.3750 | | | | | | | | | | |
| 1 7/16 | **UELS307-107D1W3** | 1.4375 | | | | | | | | | | |
| **40** | **UELS308D1W3** | 40 | 90 | 57.1 | 41.3 | 27 | 2 | 1 | 19.8 | 37.3 | 8 | M10 × 1.25 |
| 1 1/2 | **UELS308-108D1W3** | 1.5000 | 3.5433 | 2.248 | 1.6260 | 1.0630 | 0.079 | 0.039 | 0.780 | 1.469 | 0.315 | 3/8-24UNF |
| 1 9/16 | **UELS308-109D1W3** | 1.5625 | | | | | | | | | | |
| **45** | **UELS309D1W3** | 45 | 100 | 58.7 | 42.9 | 29 | 2 | 1 | 19.8 | 38.9 | 8 | M10 × 1.25 |
| 1 5/8 | **UELS309-110D1W3** | 1.6250 | | | | | | | | | | |
| 1 11/16 | **UELS309-111D1W3** | 1.6875 | 3.9370 | 2.311 | 1.6890 | 1.1417 | 0.079 | 0.039 | 0.780 | 1.531 | 0.315 | 3/8-24UNF |
| 1 3/4 | **UELS309-112D1W3** | 1.7500 | | | | | | | | | | |
| **50** | **UELS310D1W3** | 50 | 110 | 66.6 | 49.2 | 32 | 2.5 | 1.5 | 24.6 | 42 | 8.7 | M10 × 1.25 |
| 1 13/16 | **UELS310-113D1W3** | 1.8125 | | | | | | | | | | |
| 1 7/8 | **UELS310-114D1W3** | 1.8750 | 4.3307 | 2.622 | 1.9370 | 1.2598 | 0.098 | 0.059 | 0.969 | 1.654 | 0.343 | 3/8-24UNF |
| 1 15/16 | **UELS310-115D1W3** | 1.9375 | | | | | | | | | | |
| **55** | **UELS311D1W3** | 55 | 120 | 73 | 55.6 | 34 | 2.5 | 1.5 | 27.8 | 45.2 | 8.7 | M10 × 1.25 |
| **2** | **UELS311-200D1W3** | 2.0000 | | | | | | | | | | |
| 2 1/16 | **UELS311-201D1W3** | 2.0625 | 4.7244 | 2.874 | 2.1890 | 1.3386 | 0.098 | 0.059 | 1.094 | 1.780 | 0.343 | 3/8-24UNF |
| 2 1/8 | **UELS311-202D1W3** | 2.1250 | | | | | | | | | | |
| 2 3/16 | **UELS311-203D1W3** | 2.1875 | | | | | | | | | | |

Remarks: 1) These numbers indicate relubricatable type. If maintenance free type is needed, please order without suffix "D1".
2) For inch series bearings, the $f_0$ factor for calculating equivalent radial load is the same as the metric series.

| Nominal dimensions | | | Basic load ratings | | Factor[2)] | Mass |
|---|---|---|---|---|---|---|
| mm / inch | | | N / lbf | | | kg / lb |
| $d_3$ | $B_5$ | $F$ | dynamic $C_r$ | static $C_{or}$ | $f_0$ | |
| 42.8 | 15.9 | 4.3 | 21 200 | 10 900 | 12.6 | 0.45 |
| 1.685 | 0.626 | 0.169 | 4 750 | 2 460 | | 1.13<br>1.09<br>1.05<br>1.00 |
| 50 | 17.5 | 5.1 | 26 700 | 15 000 | 13.3 | 0.71 |
| 1.969 | 0.689 | 0.201 | 6 000 | 3 400 | | 1.62<br>1.56<br>1.50 |
| 55 | 17.5 | 5.3 | 33 500 | 19 100 | 13.1 | 0.83 |
| 2.165 | 0.689 | 0.209 | 7 500 | 4 300 | | 1.99<br>1.91<br>1.84<br>1.76 |
| 63.5 | 20.6 | 5.6 | 40 500 | 24 000 | 13.2 | 1.12 |
| 2.500 | 0.811 | 0.220 | 9 150 | 5 400 | | 2.67<br>2.58 |
| 70 | 20.6 | 5.8 | 53 000 | 32 000 | 13.1 | 1.50 |
| 2.756 | 0.811 | 0.228 | 11 900 | 7 200 | | 3.26<br>3.37<br>3.26 |
| 76.2 | 22.2 | 6.3 | 62 000 | 38 500 | 13.2 | 1.93 |
| 3.000 | 0.874 | 0.248 | 13 900 | 8 600 | | 4.55<br>4.44<br>4.30 |
| 83 | 22.2 | 6.5 | 71 500 | 45 000 | 13.2 | 2.42 |
| 3.268 | 0.874 | 0.256 | 16 100 | 10 100 | | 5.76<br>5.57<br>5.43<br>5.26 |

## Ball bearings
## Eccentric locking collar type

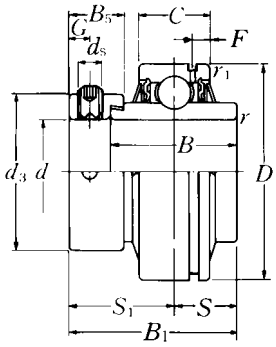


| Shaft dia. mm / inch | Bearing number [1] | Nominal dimensions $d$ | $D$ | $B_1$ | $B$ | $C$ (mm) | $r_s$ min. (mm) | $r_{1s}$ min. (mm) | $S$ | $S_1$ | $G$ | $ds$ |
|---|---|---|---|---|---|---|---|---|---|---|---|---|
| **60** | **UELS312D1W3** | 60 | 130 | 79.4 | 61.9 | 36 | 2.5 | 1.5 | 30.95 | 48.45 | 8.7 | M10 × 1.25 |
| 2 1/4 | **UELS312-204D1W3** | 2.2500 | | | | | | | | | | |
| 2 5/16 | **UELS312-205D1W3** | 2.3125 | 5.1181 | 3.126 | 2.4370 | 1.4173 | 0.098 | 0.059 | 1.219 | 1.907 | 0.343 | 3/8-24UNF |
| 2 3/8 | **UELS312-206D1W3** | 2.3750 | | | | | | | | | | |
| 2 7/16 | **UELS312-207D1W3** | 2.4375 | | | | | | | | | | |
| **65** | **UELS313D1W3** | 65 | 140 | 85.7 | 65.1 | 39 | 2.5 | 2 | 32.55 | 53.15 | 10.3 | M12 × 1.5 |
| 2 1/2 | **UELS313-208D1W3** | 2.5000 | 5.5118 | 3.374 | 2.5630 | 1.5354 | 0.098 | 0.079 | 1.281 | 2.093 | 0.406 | 1/2-20UNF |
| 2 9/16 | **UELS313-209D1W3** | 2.5625 | | | | | | | | | | |
| **70** | **UELS314D1W3** | 70 | 150 | 92.1 | 68.3 | 41 | 2.5 | 2 | 34.15 | 57.95 | 10.3 | M12 × 1.5 |
| 2 5/8 | **UELS314-210D1W3** | 2.6250 | | | | | | | | | | |
| 2 11/16 | **UELS314-211D1W3** | 2.6875 | 5.9055 | 3.626 | 2.6890 | 1.6142 | 0.098 | 0.079 | 1.344 | 2.281 | 0.406 | 1/2-20UNF |
| 2 3/4 | **UELS314-212D1W3** | 2.7500 | | | | | | | | | | |
| **75** | **UELS315D1W3** | 75 | 160 | 100 | 74.6 | 43 | 2.5 | 2 | 37.3 | 62.7 | 12.7 | M16 × 1.5 |
| 2 13/16 | **UELS315-213D1W3** | 2.8125 | | | | | | | | | | |
| 2 7/8 | **UELS315-214D1W3** | 2.8750 | 6.2992 | 3.937 | 2.9370 | 1.6929 | 0.098 | 0.079 | 1.469 | 2.469 | 0.500 | 5/8-18UNF |
| 2 15/16 | **UELS315-215D1W3** | 2.9375 | | | | | | | | | | |
| 3 | **UELS315-300D1W3** | 3.0000 | | | | | | | | | | |
| **80** | **UELS316D1W3** | 80 | 170 | 106.4 | 81 | 45 | 2.5 | 2 | 40.5 | 65.9 | 12.7 | M16 × 1.5 |
| 3 1/16 | **UELS316-301D1W3** | 3.0625 | | | | | | | | | | |
| 3 1/8 | **UELS316-302D1W3** | 3.1250 | 6.6929 | 4.189 | 3.1890 | 1.7717 | 0.098 | 0.079 | 1.594 | 2.594 | 0.500 | 5/8-18UNF |
| 3 3/16 | **UELS316-303D1W3** | 3.1875 | | | | | | | | | | |
| **85** | **UELS317D1W3** | 85 | 180 | 109.5 | 84.1 | 47 | 3 | 2.5 | 42.05 | 67.45 | 12.7 | M16 × 1.5 |
| 3 1/4 | **UELS317-304D1W3** | 3.2500 | | | | | | | | | | |
| 3 5/16 | **UELS317-305D1W3** | 3.3125 | 7.0866 | 4.311 | 3.3110 | 1.8504 | 0.118 | 0.098 | 1.656 | 2.656 | 0.500 | 5/8-18UNF |
| 3 7/16 | **UELS317-307D1W3** | 3.4375 | | | | | | | | | | |
| **90** | **UELS318D1W3** | 90 | 190 | 115.9 | 87.3 | 49 | 3 | 2.5 | 43.65 | 72.25 | 14.3 | M20 × 1.5 |
| 3 7/16 | **UELS318-307D1W3** | 3.4375 | 7.4803 | 4.563 | 3.4370 | 1.9291 | 0.118 | 0.098 | 1.719 | 2.844 | 0.563 | 3/4-16UNF |
| 3 1/2 | **UELS318-308D1W3** | 3.5000 | | | | | | | | | | |

Remarks: 1) These numbers indicate relubricatable type. If maintenance free type is needed, please order without suffix "D1".
2) For inch series bearings, the $f_0$ factor for calculating equivalent radial load is the same as the metric series.

| Nominal dimensions | | | Basic load ratings | | Factor[2)] | Mass |
|---|---|---|---|---|---|---|
| mm / inch | | | N / lbf | | | kg / lb |
| $d_3$ | $B_5$ | $F$ | dynamic $C_r$ | static $C_{or}$ | $f_0$ | |
| 89 | 23.9 | 6.7 | 82 000 | 52 000 | 13.2 | 3.04 |
| 3.504 | 0.941 | 0.264 | 18 400 | 11 700 | | 7.01<br>6.86<br>6.69<br>6.40 |
| 97 | 27 | 7.5 | 92 500 | 60 000 | 13.2 | 3.79 |
| 3.819 | 1.063 | 0.295 | 20 800 | 13 400 | | 8.76<br>8.55 |
| 102 | 30.2 | 7.5 | 104 000 | 68 000 | 13.2 | 4.54 |
| 4.016 | 1.189 | 0.295 | 23 400 | 15 300 | | 10.7<br>10.5<br>10.2 |
| 113 | 31.8 | 7.7 | 113 000 | 77 000 | 13.2 | 5.50 |
| 4.449 | 1.252 | 0.303 | 25 500 | 17 400 | | 13.5<br>13.2<br>13.0<br>12.9 |
| 119 | 31.8 | 7.8 | 123 000 | 86 500 | 13.3 | 6.89 |
| 4.685 | 1.252 | 0.307 | 27 600 | 19 500 | | 15.3<br>15.0<br>15.3 |
| 127 | 31.8 | 8.2 | 133 000 | 97 000 | 13.3 | 8.21 |
| 5.000 | 1.252 | 0.323 | 29 800 | 21 800 | | 18.2<br>17.9<br>17.2 |
| 133 | 36.5 | 8.5 | 143 000 | 107 000 | 13.3 | 9.34 |
| 5.236 | 1.437 | 0.335 | 32 000 | 24 100 | | 21.2<br>20.7 |

## Ball bearings
## Eccentric locking collar type

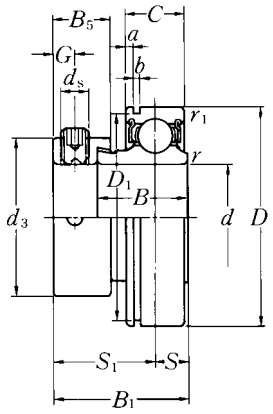


| Shaft dia. mm / inch | Bearing number 1) | Nominal dimensions mm / inch: d | D | B1 | B | C | rs min. | r1s min. | S | S1 | G | ds |
|---|---|---|---|---|---|---|---|---|---|---|---|---|
| 12 | AELS201NW3 | 12 | 40 | 28.6 | 19 | 12 | 0.6 | 0.6 | 6.5 | 22.1 | 4.8 | M6 × 0.75 |
| 1/2 | AELS201-008NW3 | 0.5000 | 1.5748 | 1.126 | 0.7480 | 0.4724 | 0.024 | 0.024 | 0.256 | 0.870 | 0.189 | 1/4-28UNF |
| 15 | AELS202NW3 | 15 | 40 | 28.6 | 19 | 12 | 0.6 | 0.6 | 6.5 | 22.1 | 4.8 | M6 × 0.75 |
| 9/16 | AELS202-009NW3 | 0.5625 | 1.5748 | 1.126 | 0.7480 | 0.4724 | 0.024 | 0.024 | 0.256 | 0.870 | 0.189 | 1/4-28UNF |
| 5/8 | AELS202-010NW3 | 0.6250 | | | | | | | | | | |
| 17 | AELS203NW3 | 17 | 40 | 28.6 | 19 | 12 | 0.6 | 0.6 | 6.5 | 22.1 | 4.8 | M6 × 0.75 |
| 11/16 | AELS203-011NW3 | 0.6875 | 1.5748 | 1.126 | 0.7480 | 0.4724 | 0.024 | 0.024 | 0.256 | 0.870 | 0.189 | 1/4-28UNF |
| 20 | AELS204NW3 | 20 | 47 | 31 | 21.5 | 14 | 1 | 0.6 | 7.5 | 23.5 | 4.8 | M6 × 0.75 |
| 3/4 | AELS204-012NW3 | 0.7500 | 1.8504 | 1.220 | 0.8465 | 0.5512 | 0.039 | 0.024 | 0.295 | 0.925 | 0.189 | 1/4-28UNF |
| 25 | AELS205NW3 | 25 | 52 | 31 | 21.5 | 15 | 1 | 0.6 | 7.5 | 23.5 | 4.8 | M6 × 0.75 |
| 13/16 | AELS205-013NW3 | 0.8125 | | | | | | | | | | |
| 7/8 | AELS205-014NW3 | 0.8750 | 2.0472 | 1.220 | 0.8465 | 0.5906 | 0.039 | 0.024 | 0.295 | 0.925 | 0.189 | 1/4-28UNF |
| 15/16 | AELS205-015NW3 | 0.9375 | | | | | | | | | | |
| 1 | AELS205-100NW3 | 1.0000 | | | | | | | | | | |
| 30 | AELS206NW3 | 30 | 62 | 35.7 | 23.8 | 16 | 1 | 0.6 | 9 | 26.7 | 6 | M8 × 1 |
| 1 1/16 | AELS206-101NW3 | 1.0625 | | | | | | | | | | |
| 1 1/8 | AELS206-102NW3 | 1.1250 | 2.4409 | 1.406 | 0.9370 | 0.6299 | 0.039 | 0.024 | 0.354 | 1.051 | 0.236 | 5/16-24UNF |
| 1 3/16 | AELS206-103NW3 | 1.1875 | | | | | | | | | | |
| 1 1/4 | AELS206-104NW3 | 1.2500 | | | | | | | | | | |
| 35 | AELS207NW3 | 35 | 72 | 38.9 | 25.4 | 17 | 1.5 | 0.6 | 9.5 | 29.4 | 6.8 | M10 × 1.25 |
| 1 1/4 | AELS207-104NW3 | 1.2500 | | | | | | | | | | |
| 1 5/16 | AELS207-105NW3 | 1.3125 | 2.8346 | 1.531 | 1.0000 | 0.6693 | 0.059 | 0.024 | 0.374 | 1.157 | 0.268 | 3/8-24UNF |
| 1 3/8 | AELS207-106NW3 | 1.3750 | | | | | | | | | | |
| 1 7/16 | AELS207-107NW3 | 1.4375 | | | | | | | | | | |
| 40 | AELS208NW3 | 40 | 80 | 43.7 | 30.2 | 18 | 1.5 | 0.6 | 11 | 32.7 | 6.8 | M10 × 1.25 |
| 1 1/2 | AELS208-108NW3 | 1.5000 | 3.1496 | 1.720 | 1.1890 | 0.7087 | 0.059 | 0.024 | 0.433 | 1.287 | 0.268 | 3/8-24UNF |
| 1 9/16 | AELS208-109NW3 | 1.5625 | | | | | | | | | | |
| 45 | AELS209NW3 | 45 | 85 | 43.7 | 30.2 | 19 | 1.5 | 1.5 | 11 | 32.7 | 6.8 | M10 × 1.25 |
| 1 5/8 | AELS209-110NW3 | 1.6250 | | | | | | | | | | |
| 1 11/16 | AELS209-111NW3 | 1.6875 | 3.3465 | 1.720 | 1.1890 | 0.7480 | 0.059 | 0.059 | 0.433 | 1.287 | 0.268 | 3/8-24UNF |
| 1 3/4 | AELS209-112NW3 | 1.7500 | | | | | | | | | | |

Remarks: 1) If relubricatable type is needed, please order with suffix "D1".
2) For inch series bearings, the $f_0$ factor for calculating equivalent radial load is the same as the metric series.

| Nominal dimensions | | | | | Basic load ratings | | Factor[2)] | Mass |
|---|---|---|---|---|---|---|---|---|
| mm / inch | | | | | N / lbf | | | kg / lb |
| $d_3$ | $D_1$ | $a$ | $b$ | $B_5$ | dynamic $C_r$ | static $C_{or}$ | $f_0$ | |
| 29 | 38.1 | 1.98 | 1.5 | 13.6 | 9 600 | 4 600 | 12.8 | 0.12 |
| 1.142 | 1.500 | 0.078 | 0.059 | 0.535 | 2 160 | 1 030 | | 0.26 |
| 29 | 38.1 | 1.98 | 1.5 | 13.6 | 9 600 | 4 600 | 12.8 | 0.11 |
| 1.142 | 1.500 | 0.078 | 0.059 | 0.535 | 2 160 | 1 030 | | 0.26 |
| | | | | | | | | 0.24 |
| 29 | 38.1 | 1.98 | 1.5 | 13.6 | 9 600 | 4 600 | 12.8 | 0.10 |
| 1.142 | 1.500 | 0.078 | 0.059 | 0.535 | 2 160 | 1 030 | | 0.23 |
| 33 | 44.6 | 2.38 | 1.5 | 13.5 | 12 800 | 6 650 | 13.2 | 0.17 |
| 1.299 | 1.756 | 0.094 | 0.059 | 0.531 | 2 890 | 1 500 | | 0.35 |
| 38 | 49.73 | 2.38 | 1.5 | 13.5 | 14 000 | 7 850 | 13.9 | 0.20 |
| | | | | | | | | 0.51 |
| 1.496 | 1.958 | 0.094 | 0.059 | 0.531 | 3 150 | 1 770 | | 0.48 |
| | | | | | | | | 0.45 |
| | | | | | | | | 0.42 |
| 44.5 | 59.61 | 3.18 | 2.05 | 15.9 | 19 500 | 11 300 | 13.8 | 0.31 |
| | | | | | | | | 0.74 |
| 1.752 | 2.347 | 0.125 | 0.081 | 0.626 | 4 400 | 2 540 | | 0.73 |
| | | | | | | | | 0.66 |
| | | | | | | | | 0.61 |
| 55.5 | 68.81 | 3.18 | 2.05 | 17.5 | 25 700 | 15 300 | 13.8 | 0.49 |
| | | | | | | | | 1.15 |
| 2.185 | 2.709 | 0.125 | 0.081 | 0.689 | 5 750 | 3 450 | | 1.10 |
| | | | | | | | | 1.04 |
| | | | | | | | | 0.98 |
| 60 | 76.81 | 3.18 | 2.05 | 18.3 | 29 100 | 17 800 | 14.0 | 0.66 |
| 2.362 | 3.024 | 0.125 | 0.081 | 0.720 | 6 550 | 4 000 | | 1.41 |
| | | | | | | | | 1.34 |
| 63.5 | 81.81 | 3.18 | 2.05 | 18.3 | 32 500 | 20 400 | 14.1 | 0.73 |
| | | | | | | | | 1.81 |
| 2.500 | 3.221 | 0.125 | 0.081 | 0.720 | 7 350 | 4 600 | | 1.72 |
| | | | | | | | | 1.63 |

## Ball bearings
## Eccentric locking collar type

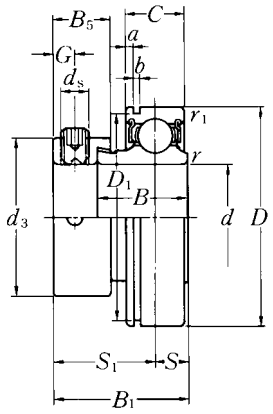


| Shaft dia. mm / inch | Bearing number 1) | Nominal dimensions d | D | B1 | B | C (mm) | rs min. (mm) | r1s min. (mm) | S (mm) | S1 (mm) | G (mm) | ds |
|---|---|---|---|---|---|---|---|---|---|---|---|---|
| **50** | **AELS210NW3** | 50 | 90 | 43.7 | 30.2 | 20 | 1.5 | 1.5 | 11 | 32.7 | 6.8 | M10 × 1.25 |
| **1 13/16** | **AELS210-113NW3** | 1.8125 | | | | | | | | | | |
| **1 7/8** | **AELS210-114NW3** | 1.8750 | 3.5433 | 1.720 | 1.1890 | 0.7874 | 0.059 | 0.059 | 0.433 | 1.287 | 0.268 | 3/8-24UNF |
| **1 15/16** | **AELS210-115NW3** | 1.9375 | | | | | | | | | | |
| **2** | **AELS210-200NW3** | 2.0000 | | | | | | | | | | |
| **55** | **AELS211NW3** | 55 | 100 | 48.4 | 32.5 | 21 | 2 | 1.5 | 12 | 36.4 | 8 | M10 × 1.25 |
| **2** | **AELS211-200NW3** | 2.0000 | | | | | | | | | | |
| **2 1/16** | **AELS211-201NW3** | 2.0625 | 3.9370 | 1.906 | 1.2795 | 0.8268 | 0.079 | 0.059 | 0.472 | 1.433 | 0.315 | 3/8-24UNF |
| **2 1/8** | **AELS211-202NW3** | 2.1250 | | | | | | | | | | |
| **2 3/16** | **AELS211-203NW3** | 2.1875 | | | | | | | | | | |
| **60** | **AELS212NW3** | 60 | 110 | 53.1 | 37.2 | 22 | 2 | 1.5 | 13.5 | 39.6 | 8 | M10 × 1.25 |
| **2 1/4** | **AELS212-204NW3** | 2.2500 | | | | | | | | | | |
| **2 5/16** | **AELS212-205NW3** | 2.3125 | 4.3307 | 2.091 | 1.4646 | 0.8661 | 0.079 | 0.059 | 0.531 | 1.559 | 0.315 | 3/8-24UNF |
| **2 3/8** | **AELS212-206NW3** | 2.3750 | | | | | | | | | | |
| **2 7/16** | **AELS212-207NW3** | 2.4375 | | | | | | | | | | |

Remarks: 1) If relubricatable type is needed, please order with suffix "D1".
2) For inch series bearings, the $f_0$ factor for calculating equivalent radial load is the same as the metric series.

| Nominal dimensions | | | | | Basic load ratings | | Factor[2)] | Mass |
|---|---|---|---|---|---|---|---|---|
| mm / inch | | | | | N / lbf | | | kg / lb |
| $d_3$ | $D_1$ | $a$ | $b$ | $B_5$ | dynamic $C_r$ | static $C_{or}$ | $f_0$ | |
| 69.5 | 86.79 | 3.18 | 2.85 | 18.3 | 35 000 | 23 200 | 14.4 | 0.74 |
| 2.736 | 3.417 | 0.125 | 0.112 | 0.720 | 7 900 | 5 200 | | 1.85 / 1.76 / 1.68 / 1.59 |
| 76 | 96.8 | 3.18 | 2.85 | 20.7 | 43 500 | 29 200 | 14.3 | 1.00 |
| 2.992 | 3.811 | 0.125 | 0.112 | 0.815 | 9 750 | 6 550 | | 2.49 / 2.38 / 2.27 / 2.16 |
| 84 | 106.81 | 3.18 | 2.85 | 22.3 | 52 500 | 36 000 | 14.3 | 1.33 |
| 3.307 | 4.205 | 0.125 | 0.112 | 0.878 | 11 800 | 8 150 | | 3.17 / 3.04 / 2.91 / 2.78 |

## Ball bearings
## Eccentric locking collar type

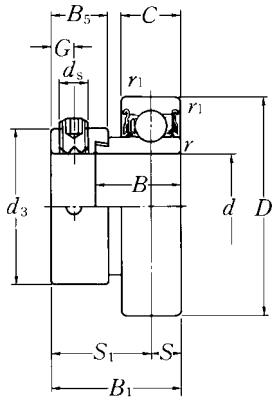


| Shaft dia. mm / inch | Bearing number 1) | Nominal dimensions d | D | B1 | B | C | rs min. | r1s min. | S | S1 | G | ds |
|---|---|---|---|---|---|---|---|---|---|---|---|---|
| | | mm | | | | | | | | | | |
| 12 | JELS201W3 | 12 | 40 | 28.6 | 19 | 13 | 0.6 | 0.4 | 6.5 | 22.1 | 4.8 | M6 × 0.75 |
| 1/2 | JELS201-008W3 | 0.5000 | 1.5748 | 1.126 | 0.7480 | 0.5118 | 0.024 | 0.016 | 0.256 | 0.870 | 0.189 | 1/4-28UNF |
| 15 | JELS202W3 | 15 | 40 | 28.6 | 19 | 13 | 0.6 | 0.4 | 6.5 | 22.1 | 4.8 | M6 × 0.75 |
| 9/16 | JELS202-009W3 | 0.5625 | 1.5748 | 1.126 | 0.7480 | 0.5118 | 0.024 | 0.016 | 0.256 | 0.870 | 0.189 | 1/4-28UNF |
| 5/8 | JELS202-010W3 | 0.6250 | | | | | | | | | | |
| 17 | JELS203W3 | 17 | 40 | 28.6 | 19 | 13 | 0.6 | 0.4 | 6.5 | 22.1 | 4.8 | M6 × 0.75 |
| 11/16 | JELS203-011W3 | 0.6875 | 1.5748 | 1.126 | 0.7480 | 0.5118 | 0.024 | 0.016 | 0.256 | 0.870 | 0.189 | 1/4-28UNF |
| 20 | JELS204W3 | 20 | 47 | 31 | 21.5 | 15 | 1 | 0.6 | 7.5 | 23.5 | 4.8 | M6 × 0.75 |
| 3/4 | JELS204-012W3 | 0.7500 | 1.8504 | 1.220 | 0.8465 | 0.5906 | 0.039 | 0.024 | 0.295 | 0.925 | 0.189 | 1/4-28UNF |
| 25 | JELS205W3 | 25 | 52 | 31 | 21.5 | 15 | 1 | 0.6 | 7.5 | 23.5 | 4.8 | M6 × 0.75 |
| 13/16 | JELS205-013W3 | 0.8125 | | | | | | | | | | |
| 7/8 | JELS205-014W3 | 0.8750 | 2.0472 | 1.220 | 0.8465 | 0.5906 | 0.039 | 0.024 | 0.295 | 0.925 | 0.189 | 1/4-28UNF |
| 15/16 | JELS205-015W3 | 0.9375 | | | | | | | | | | |
| 1 | JELS205-100W3 | 1.0000 | | | | | | | | | | |
| 30 | JELS206W3 | 30 | 62 | 35.7 | 23.8 | 18 | 1 | 1 | 9 | 26.7 | 6 | M8 × 1 |
| 1 1/16 | JELS206-101W3 | 1.0625 | | | | | | | | | | |
| 1 1/8 | JELS206-102W3 | 1.1250 | 2.4409 | 1.406 | 0.9370 | 0.7087 | 0.039 | 0.039 | 0.354 | 1.051 | 0.236 | 5/16-24UNF |
| 1 3/16 | JELS206-103W3 | 1.1875 | | | | | | | | | | |
| 1 1/4 | JELS206-104W3 | 1.2500 | | | | | | | | | | |
| 35 | JELS207W3 | 35 | 72 | 38.9 | 25.4 | 19 | 1.5 | 1.5 | 9.5 | 29.4 | 6.8 | M10 × 1.25 |
| 1 1/4 | JELS207-104W3 | 1.2500 | | | | | | | | | | |
| 1 5/16 | JELS207-105W3 | 1.3125 | 2.8346 | 1.531 | 1.0000 | 0.7480 | 0.059 | 0.059 | 0.374 | 1.157 | 0.268 | 3/8-24UNF |
| 1 3/8 | JELS207-106W3 | 1.3750 | | | | | | | | | | |
| 1 7/16 | JELS207-107W3 | 1.4375 | | | | | | | | | | |
| 40 | JELS208W3 | 40 | 80 | 43.7 | 30.2 | 22 | 1.5 | 1.5 | 11 | 32.7 | 6.8 | M10 × 1.25 |
| 1 1/2 | JELS208-108W3 | 1.5000 | 3.1496 | 1.720 | 1.1890 | 0.8661 | 0.059 | 0.059 | 0.433 | 1.287 | 0.268 | 3/8-24UNF |
| 1 9/16 | JELS208-109W3 | 1.5625 | | | | | | | | | | |
| 45 | JELS209W3 | 45 | 85 | 43.7 | 30.2 | 22 | 1.5 | 1.5 | 11 | 32.7 | 6.8 | M10 × 1.25 |
| 1 5/8 | JELS209-110W3 | 1.6250 | | | | | | | | | | |
| 1 11/16 | JELS209-111W3 | 1.6875 | 3.3465 | 1.720 | 1.1890 | 0.8661 | 0.059 | 0.059 | 0.433 | 1.287 | 0.268 | 3/8-24UNF |
| 1 3/4 | JELS209-112W3 | 1.7500 | | | | | | | | | | |

Remarks: 1) If relubricatable type is needed, please order with suffix "D1".
2) For inch series bearings, the $f_0$ factor for calculating equivalent radial load is the same as the metric series.

| Nominal dimensions | | Basic load ratings | | Factor[2)] | Mass |
|---|---|---|---|---|---|
| mm<br>$d_3$ | inch<br>$B_5$ | N<br>dynamic<br>$C_r$ | lbf<br>static<br>$C_{or}$ | $f_0$ | kg lb |
| 29<br>1.142 | 13.6<br>0.535 | 9 600<br>2 160 | 4 600<br>1 030 | 12.8 | 0.13<br>0.28 |
| 29<br>1.142 | 13.6<br>0.535 | 9 600<br>2 160 | 4 600<br>1 030 | 12.8 | 0.13<br>0.26<br>0.24 |
| 29<br>1.142 | 13.6<br>0.535 | 9 600<br>2 160 | 4 600<br>1 030 | 12.8 | 0.10<br>0.22 |
| 33<br>1.299 | 13.5<br>0.531 | 12 800<br>2 890 | 6 650<br>1 500 | 13.2 | 0.18<br>0.42 |
| 38<br>1.496 | 13.5<br>0.531 | 14 000<br>3 150 | 7 850<br>1 770 | 13.9 | 0.20<br>0.54<br>0.51<br>0.48<br>0.44 |
| 44.5<br>1.752 | 15.9<br>0.626 | 19 500<br>4 400 | 11 300<br>2 540 | 13.8 | 0.34<br>0.84<br>0.79<br>0.75<br>0.70 |
| 55.5<br>2.185 | 17.5<br>0.689 | 25 700<br>5 750 | 15 300<br>3 450 | 13.8 | 0.53<br>1.29<br>1.24<br>1.18<br>1.12 |
| 60<br>2.362 | 18.3<br>0.720 | 29 100<br>6 550 | 17 800<br>4 000 | 14.0 | 0.71<br>1.64<br>1.57 |
| 63.5<br>2.500 | 18.3<br>0.720 | 32 500<br>7 350 | 20 400<br>4 600 | 14.1 | 0.79<br>1.92<br>1.85<br>1.76 |

## Ball bearings
## Eccentric locking collar type

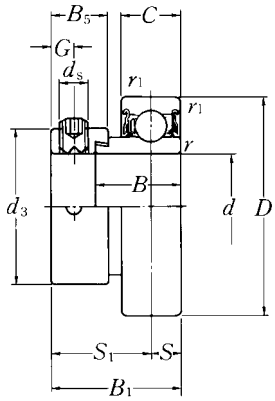


| Shaft dia. mm / inch | Bearing number 1) | Nominal dimensions | | | | | | | | | | |
|---|---|---|---|---|---|---|---|---|---|---|---|---|
| | | mm / inch | | | | mm | | | | | | |
| | | $d$ | $D$ | $B_1$ | $B$ | $C$ | $r_s$ min. | $r_{1s}$ min. | $S$ | $S_1$ | $G$ | $ds$ |
| **50** | **JELS210W3** | 50 | 90 | 43.7 | 30.2 | 22 | 1.5 | 1.5 | 11 | 32.7 | 6.8 | M10 × 1.25 |
| **1 13/16** | **JELS210-113W3** | 1.8125 | | | | | | | | | | |
| **1 7/8** | **JELS210-114W3** | 1.8750 | 3.5433 | 1.720 | 1.1890 | 0.8661 | 0.059 | 0.059 | 0.433 | 1.287 | 0.268 | 3/8-24UNF |
| **1 15/16** | **JELS210-115W3** | 1.9375 | | | | | | | | | | |
| **2** | **JELS210-200W3** | 2.0000 | | | | | | | | | | |
| **55** | **JELS211W3** | 55 | 100 | 48.4 | 32.5 | 24 | 2 | 2 | 12 | 36.4 | 8 | M10 × 1.25 |
| **2** | **JELS211-200W3** | 2.0000 | | | | | | | | | | |
| **2 1/16** | **JELS211-201W3** | 2.0625 | 3.9370 | 1.906 | 1.2795 | 0.9449 | 0.079 | 0.079 | 0.472 | 1.433 | 0.315 | 3/8-24UNF |
| **2 1/8** | **JELS211-202W3** | 2.1250 | | | | | | | | | | |
| **2 3/16** | **JELS211-203W3** | 2.1875 | | | | | | | | | | |
| **60** | **JELS212W3** | 60 | 110 | 53.1 | 37.2 | 27 | 2 | 2 | 13.5 | 39.6 | 8 | M10 × 1.25 |
| **2 1/4** | **JELS212-204W3** | 2.2500 | | | | | | | | | | |
| **2 5/16** | **JELS212-205W3** | 2.3125 | 4.3307 | 2.091 | 1.4646 | 1.0630 | 0.079 | 0.079 | 0.531 | 1.559 | 0.315 | 3/8-24UNF |
| **2 3/8** | **JELS212-206W3** | 2.3750 | | | | | | | | | | |
| **2 7/16** | **JELS212-207W3** | 2.4375 | | | | | | | | | | |

Remarks: 1) If relubricatable type is needed, please order with suffix "D1".
2) For inch series bearings, the $f_0$ factor for calculating equivalent radial load is the same as the metric series.

| Nominal dimensions | | Basic load ratings | | Factor[2)] | Mass |
|---|---|---|---|---|---|
| mm | inch | N | lbf | | kg lb |
| $d_3$ | $B_5$ | dynamic $C_r$ | static $C_{or}$ | $f_0$ | |
| 69.5 | 18.3 | 35 000 | 23 200 | 14.4 | 0.87<br>2.14 |
| 2.736 | 0.720 | 7 900 | 5 200 | | 2.05<br>1.96<br>1.85 |
| 76 | 20.7 | 43 500 | 29 200 | 14.3 | 1.16<br>2.84 |
| 2.992 | 0.815 | 9 750 | 6 550 | | 2.73<br>2.62<br>2.51 |
| 84 | 22.3 | 52 500 | 36 000 | 14.3 | 1.52<br>3.59 |
| 3.307 | 0.878 | 11 800 | 8 150 | | 3.46<br>3.33<br>3.17 |

## Ball bearings
## Tight fit type

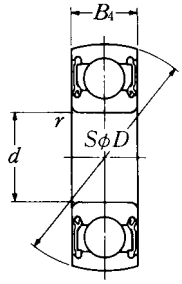


| Shaft dia. mm | Bearing number | Nominal dimensions $d$ | mm $D$ | inch $B_4$ | $r_s$ min. | Basic load ratings N dynamic $C_r$ | lbf static $C_{or}$ | Factor $f_0$ | Mass kg | lb |
|---|---|---|---|---|---|---|---|---|---|---|
| 10 | CS200LLU | 10<br>0.3937 | 30<br>1.1811 | 9<br>0.354 | 0.6<br>0.024 | 5 100<br>1 150 | 2 390<br>540 | 13.2 | 0.03<br>0.07 | |
| 12 | CS201LLU | 12<br>0.4724 | 32<br>1.2598 | 10<br>0.394 | 0.6<br>0.024 | 6 100<br>1 370 | 2 750<br>615 | 12.7 | 0.04<br>0.09 | |
| 15 | CS202LLU | 15<br>0.5906 | 35<br>1.3780 | 11<br>0.433 | 0.6<br>0.024 | 7 750<br>1 740 | 3 600<br>805 | 12.7 | 0.04<br>0.09 | |
| 17 | CS203LLU | 17<br>0.6693 | 40<br>1.5748 | 12<br>0.472 | 0.6<br>0.024 | 9 600<br>2 160 | 4 600<br>1 030 | 12.8 | 0.06<br>0.13 | |
| 20 | CS204LLU | 20<br>0.7874 | 47<br>1.8504 | 14<br>0.551 | 1<br>0.039 | 12 800<br>2 890 | 6 650<br>1 500 | 13.2 | 0.10<br>0.22 | |
| 25 | CS205LLU | 25<br>0.9843 | 52<br>2.0472 | 15<br>0.591 | 1<br>0.039 | 14 000<br>3 150 | 7 850<br>1 770 | 13.9 | 0.13<br>0.29 | |
| 30 | CS206LLU | 30<br>1.1811 | 62<br>2.4409 | 16<br>0.630 | 1<br>0.039 | 19 500<br>4 400 | 11 300<br>2 540 | 13.8 | 0.20<br>0.44 | |
| 35 | CS207LLU | 35<br>1.3780 | 72<br>2.8346 | 17<br>0.669 | 1.5<br>0.059 | 25 700<br>5 750 | 15 300<br>3 450 | 13.8 | 0.29<br>0.64 | |
| 40 | CS208LLU | 40<br>1.5748 | 80<br>3.1496 | 18<br>0.709 | 1.5<br>0.059 | 29 100<br>6 550 | 17 800<br>4 000 | 14.0 | 0.37<br>0.82 | |
| 45 | CS209LLU | 45<br>1.7717 | 85<br>3.3465 | 19<br>0.748 | 1.5<br>0.059 | 32 500<br>7 350 | 20 400<br>4 600 | 14.1 | 0.39<br>0.86 | |
| 50 | CS210LLU | 50<br>1.9685 | 90<br>3.5433 | 20<br>0.787 | 1.5<br>0.059 | 35 000<br>7 900 | 23 200<br>5 200 | 14.4 | 0.46<br>1.01 | |
| 55 | CS211LLU | 55<br>2.1654 | 100<br>3.9370 | 21<br>0.827 | 2<br>0.079 | 43 500<br>9 750 | 29 200<br>6 550 | 14.3 | 0.58<br>1.28 | |
| 60 | CS212LLU | 60<br>2.3622 | 110<br>4.3307 | 22<br>0.866 | 2<br>0.079 | 52 500<br>11 800 | 36 000<br>8 150 | 14.3 | 0.76<br>1.68 | |

Note: Symbols
$\Delta d_{mp}$: Mean bore diameter deviation
$\Delta B_s$: Inner ring width deviation
$\Delta C_s$: Outer ring width deviation

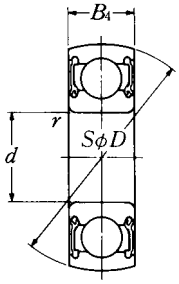


| Shaft dia. mm | Bearing number | Nominal dimensions $d$ | mm $D$ | inch $B_4$ | $r_s$ min. | Basic load ratings N dynamic $C_r$ | lbf static $C_{or}$ | Factor $f_0$ | Mass kg | lb |
|---|---|---|---|---|---|---|---|---|---|---|
| **25** | **CS305LLU** | 25<br>0.9843 | 62<br>2.4409 | 17<br>0.669 | 1.5<br>0.059 | 21 200<br>4 750 | 10 900<br>2 460 | 12.6 | 0.22<br>0.49 | |
| **30** | **CS306LLU** | 30<br>1.1811 | 72<br>2.8346 | 19<br>0.748 | 1.5<br>0.059 | 26 700<br>6 000 | 15 000<br>3 400 | 13.3 | 0.34<br>0.75 | |
| **35** | **CS307LLU** | 35<br>1.3780 | 80<br>3.1496 | 21<br>0.827 | 2<br>0.079 | 33 500<br>7 500 | 19 100<br>4 300 | 13.1 | 0.44<br>0.97 | |
| **40** | **CS308LLU** | 40<br>1.5748 | 90<br>3.5433 | 23<br>0.906 | 2<br>0.079 | 40 500<br>9 150 | 24 000<br>5 400 | 13.2 | 0.62<br>1.37 | |
| **45** | **CS309LLU** | 45<br>1.7717 | 100<br>3.9370 | 25<br>0.984 | 2<br>0.079 | 53 000<br>11 900 | 32 000<br>7 200 | 13.1 | 0.79<br>1.74 | |
| **50** | **CS310LLU** | 50<br>1.9685 | 110<br>4.3307 | 27<br>1.063 | 2.5<br>0.098 | 62 000<br>13 900 | 38 500<br>8 600 | 13.2 | 1.06<br>2.34 | |

Note: Symbols
$\Delta d_{mp}$: Mean bore diameter deviation
$\Delta B_s$: Inner ring width deviation
$\Delta C_s$: Outer ring width deviation

## Ball bearing, square bore, spherical O.D.

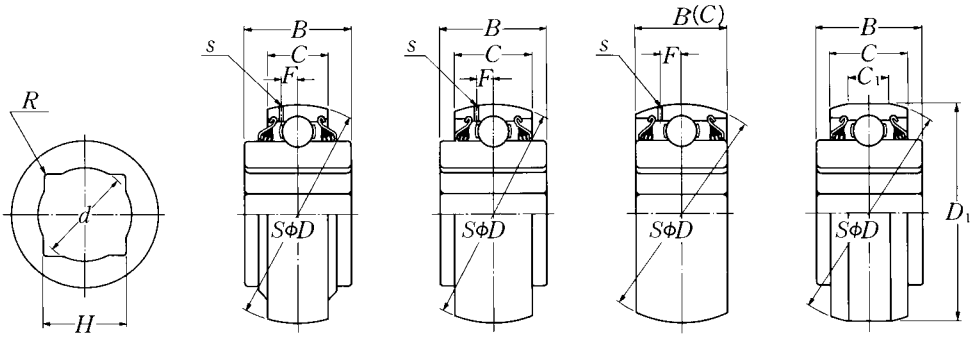


Type 1 Type 2 Type 3 Type 4

| Shaft size inch | Bearing [1] number | Type | Nominal dimensions | | | | | | | | | |
|---|---|---|---|---|---|---|---|---|---|---|---|---|
| | | | H | d max. | R [2] max. | mm D | inch D | mm C | inch C | mm B | inch B |
| 7/8 | 1AS08-7/8 | 1 | 22.987 ± 0.127 | 24.4 | 2.25 | 80 | 0 −0.013 | 18 | 0 −0.12 | 36.5 | 0 −0.12 |
| | | | 0.9050 ± 0.0050 | 0.961 | 0.089 | 3.1496 | 0 −0.0005 | 0.7087 | 0 −0.0047 | 1.4370 | 0 −0.0047 |
| 7/8 | 4AS08-7/8 | 4 | 22.987 ± 0.127 | 24.4 | 2.25 | 87.338 | 0 −0.025 | 30.2 | 0 −0.12 | 36.5 | 0 −0.12 |
| | | | 0.9050 ± 0.0050 | 0.961 | 0.089 | 3.4385 | 0 −0.0010 | 1.1890 | 0 −0.0047 | 1.4370 | 0 −0.0047 |
| 1 | 1AS08-1 | 1 | 26.162 ± 0.127 | 27.8 | 2.25 | 80 | 0 −0.013 | 18 | 0 −0.12 | 36.5 | 0 −0.12 |
| | | | 1.0300 ± 0.0050 | 1.095 | 0.089 | 3.1496 | 0 −0.0005 | 0.7087 | 0 −0.0047 | 1.4370 | 0 −0.0047 |
| 1 | 2AS08-1D1 | 2 | 26.162 ± 0.127 | 27.8 | 2.25 | 80 | 0 −0.013 | 30.2 | 0 −0.12 | 36.5 | 0 −0.12 |
| | | | 1.0300 ± 0.0050 | 1.095 | 0.089 | 3.1496 | 0 −0.0005 | 1.1890 | 0 −0.0047 | 1.4370 | 0 −0.0047 |
| 1 | 4AS08-1 | 4 | 26.162 ± 0.127 | 27.8 | 2.25 | 87.338 | 0 −0.025 | 30.2 | 0 −0.12 | 36.5 | 0 −0.12 |
| | | | 1.0300 ± 0.0050 | 1.095 | 0.089 | 3.4385 | 0 −0.0010 | 1.1890 | 0 −0.0047 | 1.4370 | 0 −0.0047 |
| 1 1/8 | 1AS08-1. 1/8 | 1 | 29.972 ± 0.127 | 31.4 | 2.25 | 80 | 0 −0.013 | 18 | 0 −0.12 | 36.5 | 0 −0.12 |
| | | | 1.1800 ± 0.0050 | 1.236 | 0.089 | 3.1496 | 0 −0.0005 | 0.7087 | 0 −0.0047 | 1.4370 | 0 −0.0047 |
| 1 1/8 | 2AS08-1. 1/8D1 | 2 | 29.972 ± 0.127 | 31.4 | 2.25 | 80 | 0 −0.013 | 30.2 | 0 −0.12 | 36.5 | 0 −0.12 |
| | | | 1.1800 ± 0.0050 | 1.236 | 0.089 | 3.1496 | 0 −0.0005 | 1.1890 | 0 −0.0047 | 1.4370 | 0 −0.0047 |

Remarks: 1) Bearings suffixed with D1 have oil holes on the outer ring.
2) $R$ min.: 0.059 inch except 3AS14-2D1 $R$ min.: 0.126 inch.

| Nominal dimensions | | | | | Basic load ratings | | Factor | Mass | |
|---|---|---|---|---|---|---|---|---|---|
| mm / inch | $D_1$ | $C_1$ | $s$ | $F$ | N / lbf dynamic $C_r$ | static $C_{or}$ | $f_0$ | kg | lb |
| | — | — | — | — | 29 100 | 17 800 | 14.0 | 0.73 | |
| | — | — | — | — | 6 550 | 4 000 | | | 1.61 |
| 85.750 | $^{0}_{-0.025}$ | 16.6 | — | — | 29 100 | 17 800 | 14.0 | 0.93 | |
| 3.3760 | $^{0}_{-0.0010}$ | 0.6535 | — | — | 6 550 | 4 000 | | | 2.05 |
| | — | — | — | — | 29 100 | 17 800 | 14.0 | 0.68 | |
| | — | — | — | — | 6 550 | 4 000 | | | 1.50 |
| | — | — | 2.2 | 6.6 | 29 100 | 17 800 | 14.0 | 0.76 | |
| | — | — | 0.087 | 0.260 | 6 550 | 4 000 | | | 1.68 |
| 85.750 | $^{0}_{-0.025}$ | 16.6 | — | — | 29 100 | 17 800 | 14.0 | 0.89 | |
| 3.3760 | $^{0}_{-0.0010}$ | 0.6535 | — | — | 6 550 | 4 000 | | | 1.96 |
| | — | — | — | — | 29 100 | 17 800 | 14.0 | 0.60 | |
| | — | — | — | — | 6 550 | 4 000 | | | 1.32 |
| | — | — | 2.2 | 6.6 | 29 100 | 17 800 | 14.0 | 0.70 | |
| | — | — | 0.087 | 0.260 | 6 550 | 4 000 | | | 1.54 |

## Ball bearing, square bore, spherical O.D.

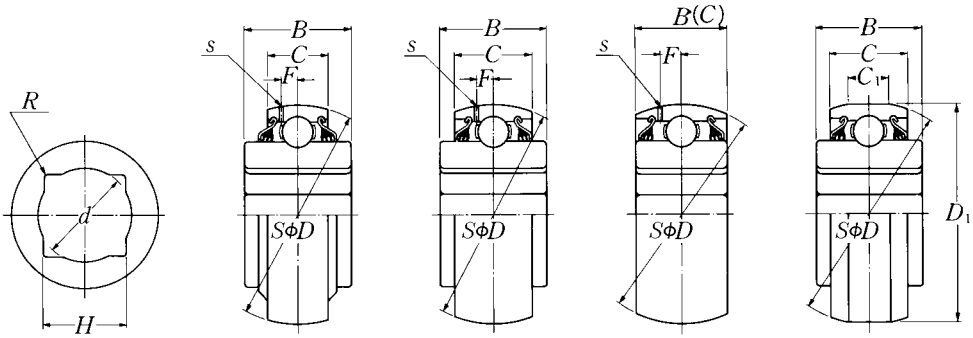


Type 1 Type 2 Type 3 Type 4

| Shaft size inch | Bearing [1] number | Type | Nominal dimensions mm / inch H | d max. | R [2] max. | D | C | B |
|---|---|---|---|---|---|---|---|---|
| 1 1/8 | 4AS08-1. 1/8 | 4 | 29.972 ± 0.127 | 31.4 | 2.25 | 87.338 0 − 0.025 | 30.2 0 − 0.12 | 36.5 0 − 0.12 |
| | | | 1.1800 ± 0.0050 | 1.236 | 0.089 | 3.4385 0 − 0.0010 | 1.1890 0 − 0.0047 | 1.4370 0 − 0.0047 |
| 1 5/32 | 1AS08-1. 5/32D1 | 1 | 30 ± 0.127 | 31.8 | 2.25 | 80 0 − 0.013 | 21 0 − 0.12 | 36.5 0 − 0.12 |
| | | | 1.1811 ± 0.0050 | 1.252 | 0.089 | 3.1496 0 − 0.0005 | 0.8268 0 − 0.0047 | 1.4370 0 − 0.0047 |
| 1 1/4 | 2AS09-1. 1/4D1 | 2 | 32.766 ± 0.127 | 34.8 | 2.25 | 85 0 − 0.015 | 30.2 0 − 0.120 | 36.5 0 − 0.12 |
| | | | 1.2900 ± 0.0050 | 1.370 | 0.089 | 3.3465 0 − 0.0006 | 1.1890 0 − 0.0047 | 1.4370 0 − 0.0047 |
| 1 1/4 | 4AS09-1. 1/4 | 4 | 32.766 ± 0.127 | 34.8 | 2.25 | 87.338 0 − 0.025 | 30.2 0 − 0.12 | 36.5 0 − 0.12 |
| | | | 1.2900 ± 0.0050 | 1.370 | 0.089 | 3.4385 0 − 0.0010 | 1.1890 0 − 0.0047 | 1.4370 0 − 0.0047 |
| 1 1/8 | 2AS10-1. 1/8D1 | 2 | 29.972 ± 0.127 | 31.4 | 2.25 | 90 0 − 0.015 | 30.2 0 − 0.12 | 36.5 0 − 0.12 |
| | | | 1.1800 ± 0.0050 | 1.236 | 0.089 | 3.5433 0 − 0.0006 | 1.1890 0 − 0.0047 | 1.4370 0 − 0.0047 |
| 1 1/8 | 3AS10-1. 1/8D1 | 3 | 29.972 ± 0.127 | 31.4 | 2.25 | 90 0 − 0.015 | 30.2 0 − 0.12 | 30.2 0 − 0.12 |
| | | | 1.1800 ± 0.0050 | 1.236 | 0.089 | 3.5433 0 − 0.0006 | 1.1890 0 − 0.0047 | 1.1890 0 − 0.0047 |
| 1 1/2 | 1AS11-1. 1/2D1 | 1 | 38.89 ± 0.127 | 41.2 | 2.25 | 100 0 − 0.015 | 25 0 − 0.15 | 44.45 0 − 0.15 |
| | | | 1.5311 ± 0.0050 | 1.622 | 0.089 | 3.9370 0 − 0.0006 | 0.9843 0 − 0.0059 | 1.7500 0 − 0.0059 |

Remarks: 1) Bearings suffixed with D1 have oil holes on the outer ring.
2) $R$ min.: 0.059 inch except 3AS14-2D1 $R$ min.: 0.126 inch.

| Nominal dimensions | | | | | Basic load ratings | | Factor | Mass | |
|---|---|---|---|---|---|---|---|---|---|
| mm / inch | | | | | N / lbf | | | kg / lb | |
| $D_1$ | | $C_1$ | $s$ | $F$ | dynamic $C_r$ | static $C_{or}$ | $f_0$ | | |
| 85.750 | 0 / −0.025 | 16.6 | — | — | 29 100 | 17 800 | 14.0 | 0.90 | |
| 3.3760 | 0 / −0.0010 | 0.6535 | — | — | 6 550 | 4 000 | | 1.99 | |
| | — | — | 2.2 | 6.6 | 29 100 | 17 800 | 14.0 | 0.64 | |
| | — | — | 0.087 | 0.260 | 6 550 | 4 000 | | 1.41 | |
| | — | — | 2.2 | 6.7 | 32 500 | 20 400 | 14.1 | 0.77 | |
| | — | — | 0.087 | 0.264 | 7 350 | 4 600 | | 1.70 | |
| 85.750 | 0 / −0.025 | 16.6 | — | — | 32 500 | 20 400 | 14.1 | 0.82 | |
| 3.3760 | 0 / −0.0010 | 0.6535 | — | — | 7 350 | 4 600 | | 1.81 | |
| | — | — | 2.2 | 6.7 | 35 000 | 23 200 | 14.4 | 0.98 | |
| | — | — | 0.087 | 0.264 | 7 900 | 5 200 | | 2.16 | |
| | — | — | 2.2 | 6.7 | 35 000 | 23 200 | 14.4 | 0.88 | |
| | — | — | 0.087 | 0.264 | 7 900 | 5 200 | | 1.94 | |
| | — | — | 2.5 | 7.6 | 43 500 | 29 200 | 14.3 | 1.19 | |
| | — | — | 0.098 | 0.299 | 9 750 | 6 550 | | 2.63 | |

## Ball bearing, square bore, spherical O.D.

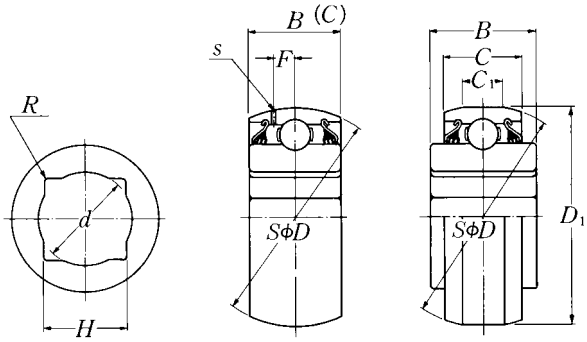


Type 3 Type 4

| Shaft size inch | Bearing [1] number | Type | Nominal dimensions | | | | | | | | | |
|---|---|---|---|---|---|---|---|---|---|---|---|---|
| | | | mm / inch | | | | | | | | | |
| | | | $H$ | | $d$ max. | $R$ [2] max. | $D$ | | $C$ | | $B$ | |
| 1½ | 3AS11-1.½D1 | 3 | 38.89 | ±0.127 | 41.2 | 2.25 | 100 | 0 −0.015 | 33.3 | 0 −0.15 | 33.3 | 0 −0.15 |
| | | | 1.5311 | ±0.0050 | 1.622 | 0.089 | 3.9370 | 0 −0.0006 | 1.3110 | 0 −0.0059 | 1.3110 | 0 −0.0059 |
| 1½ | 4AS11-1.½ | 4 | 38.89 | ±0.127 | 41.2 | 2.25 | 104.725 | 0 −0.025 | 36.5 | 0 −0.15 | 44.45 | 0 −0.15 |
| | | | 1.5311 | ±0.0050 | 1.622 | 0.089 | 4.1230 | 0 −0.0010 | 1.4370 | 0 −0.0059 | 1.7500 | 0 −0.0059 |
| 2 | 3AS14-2D1 | 3 | 52.2 | ±0.127 | 54.9 | 4.0 | 125 | 0 −0.020 | 39.69 | 0 −0.15 | 39.69 | 0 −0.15 |
| | | | 2.0551 | ±0.0050 | 2.161 | 0.157 | 4.9213 | 0 −0.0008 | 1.5626 | 0 −0.0059 | 1.5626 | 0 −0.0059 |

Remarks: 1) Bearings suffixed with D1 have oil holes on the outer ring.
2) $R$ min.: 0.059 inch except 3AS14-2D1 $R$ min.: 0.126 inch.

| Nominal dimensions | | | | | Basic load ratings | | Factor | Mass | |
|---|---|---|---|---|---|---|---|---|---|
| mm / inch | | | | | N / lbf | | | kg | lb |
| $D_1$ | | $C_1$ | $s$ | $F$ | dynamic $C_r$ | static $C_{or}$ | $f_0$ | | |
| — | | — | 2.5 | 7.6 | 43 500 | 29 200 | 14.3 | 1.10 | |
| — | | — | 0.098 | 0.299 | 9 750 | 6 550 | | 2.43 | |
| 103.556 | 0<br>— 0.025 | 15.9 | — | — | 43 500 | 29 200 | 14.3 | 1.48 | |
| 4.0770 | 0<br>— 0.0010 | 0.6142 | — | — | 9 750 | 6 550 | | 3.26 | |
| — | | 0.6260 | 3.0 | 9.4 | 62 000 | 44 000 | 14.5 | 1.90 | |
| — | | — | 0.118 | 0.370 | 14 000 | 9 900 | | 4.19 | |

## Ball bearing, square bore, cylindrical O.D.

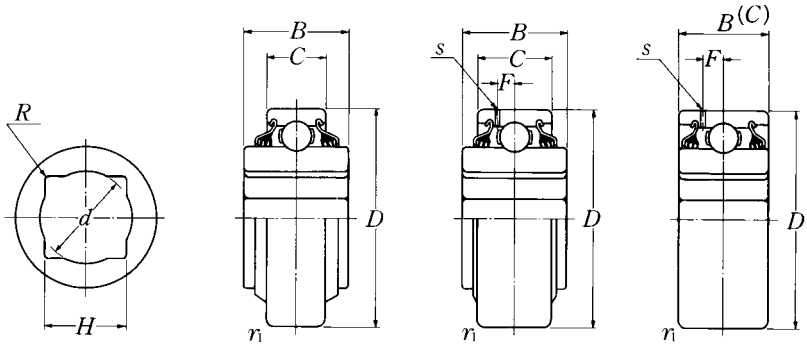


Type 5 Type 6 Type 7

| Shaft dia. inch | Bearing [1] number | Type | Nominal dimensions mm / inch H | d max. | R [2] max. | D | | C | | B | |
|---|---|---|---|---|---|---|---|---|---|---|---|
| 1 | 5AS08-1 | 5 | 26.162 ± 0.127 | 27.8 | 2.25 | 80 | 0 / − 0.013 | 18 | 0 / − 0.12 | 36.5 | 0 / − 0.12 |
| | | | 1.0300 ± 0.0050 | 1.095 | 0.089 | 3.1496 | 0 / − 0.0005 | 0.7087 | 0 / − 0.0047 | 1.4370 | 0 / − 0.0047 |
| 1 | 6AS08-1D1 | 6 | 26.162 ± 0.127 | 27.8 | 2.25 | 80 | 0 / − 0.013 | 30.2 | 0 / − 0.12 | 36.5 | 0 / − 0.12 |
| | | | 1.0300 ± 0.0050 | 1.095 | 0.089 | 3.1496 | 0 / − 0.0005 | 1.1890 | 0 / − 0.0047 | 1.4370 | 0 / − 0.0047 |
| 1⅛ | 5AS08-1.⅛ | 5 | 29.972 ± 0.127 | 31.4 | 2.25 | 80 | 0 / − 0.013 | 18 | 0 / − 0.12 | 36.5 | 0 / − 0.12 |
| | | | 1.1800 ± 0.0050 | 1.236 | 0.089 | 3.1496 | 0 / − 0.0005 | 0.7087 | 0 / − 0.0047 | 1.4370 | 0 / − 0.0047 |
| 1⅛ | 6AS08-1.⅛D1 | 6 | 29.972 ± 0.127 | 31.4 | 2.25 | 80 | 0 / − 0.013 | 30.2 | 0 / − 0.12 | 36.5 | 0 / − 0.12 |
| | | | 1.1800 ± 0.0050 | 1.236 | 0.089 | 3.1496 | 0 / − 0.0005 | 1.1890 | 0 / − 0.0047 | 1.4370 | 0 / − 0.0047 |
| 1⅛ | 7AS10-1.⅛D1 | 7 | 29.972 ± 0.127 | 31.4 | 2.25 | 90 | 0 / − 0.015 | 30.2 | 0 / − 0.12 | 30.2 | 0 / − 0.12 |
| | | | 1.1800 ± 0.0050 | 1.236 | 0.089 | 3.5433 | 0 / − 0.0006 | 1.1890 | 0 / − 0.0047 | 1.1890 | 0 / − 0.0047 |
| 1½ | 7AS11-1.½D1 | 7 | 38.89 ± 0.127 | 41.2 | 2.25 | 100 | 0 / − 0.015 | 33.3 | 0 / − 0.15 | 33.3 | 0 / − 0.15 |
| | | | 1.5311 ± 0.0050 | 1.622 | 0.089 | 3.9370 | 0 / − 0.0006 | 1.3110 | 0 / − 0.0059 | 1.3110 | 0 / − 0.0059 |

Remarks: 1) Bearings suffixed with D1 have oil holes on the outer ring.
2) $R$ min.: 0.059 inch.

| Nominal dimensions | | | Basic load ratings | | Factor | Mass | |
|---|---|---|---|---|---|---|---|
| mm | | inch | N | lbf | | kg | lb |
| $r_{1s}$ min. | $s$ | $F$ | dynamic $C_r$ | static $C_{or}$ | $f_0$ | | |
| 0.6 | — | — | 29 100 | 17 800 | 14.0 | 0.66 | |
| 0.024 | — | — | 6 550 | 4 000 | | 1.46 | |
| 1.5 | 2.2 | 6.6 | 29 100 | 17 800 | 14.0 | 0.78 | |
| 0.059 | 0.087 | 0.260 | 6 550 | 4 000 | | 1.72 | |
| 0.6 | — | — | 29 100 | 17 800 | 14.0 | 0.61 | |
| 0.024 | — | — | 6 550 | 4 000 | | 1.35 | |
| 1.5 | 2.2 | 6.6 | 29 100 | 17 800 | 14.0 | 0.73 | |
| 0.059 | 0.087 | 0.260 | 6 550 | 4 000 | | 1.61 | |
| 1.5 | 2.2 | 6.7 | 35 000 | 23 200 | 14.4 | 0.90 | |
| 0.059 | 0.087 | 0.264 | 7 900 | 5 200 | | 1.99 | |
| 2 | 2.5 | 7.6 | 43 500 | 29 200 | 14.3 | 1.12 | |
| 0.079 | 0.098 | 0.299 | 9 750 | 6 550 | | 2.47 | |

## Ball bearing, round bore, spherical O.D.

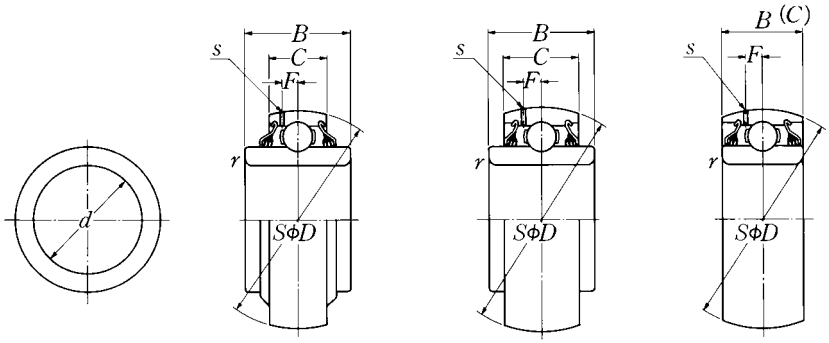


Type 1 Type 2 Type 3

| Shaft dia. inch | Bearing [1] number | Type | Nominal dimensions d (mm) | | D (mm) | | C (inch) | | B (inch) | |
|---|---|---|---|---|---|---|---|---|---|---|
| 1 3/16 | 1AC08-1. 3/16 | 1 | 30.175 | 0 / −0.013 | 80 | 0 / −0.013 | 18 | 0 / −0.12 | 30.2 | 0 / −0.12 |
| | | | 1.1880 | 0 / −0.0005 | 3.1496 | 0 / −0.0005 | 0.7087 | 0 / −0.0047 | 1.1890 | 0 / −0.0047 |
| 1.7717 | 3AC09D1 | 3 | 45 | 0 / −0.013 | 85 | 0 / −0.015 | 30.2 | 0 / −0.12 | 30.2 | 0 / −0.12 |
| | | | 1.7717 | 0 / −0.0005 | 3.3465 | 0 / −0.0006 | 1.1890 | 0 / −0.0047 | 1.1890 | 0 / −0.0047 |
| 1 1/2 | 3AC09-1. 1/2D1 | 3 | 38.989 | 0 / −0.254 | 85 | 0 / −0.015 | 30.2 | 0 / −0.12 | 30.2 | 0 / −0.12 |
| | | | 1.5350 | 0 / −0.0100 | 3.3465 | 0 / −0.0006 | 1.1890 | 0 / −0.0047 | 1.1890 | 0 / −0.0047 |
| 1 3/4 | 3AC10-1. 3/4D1 | 3 | 45.339 | 0 / −0.254 | 90 | 0 / −0.015 | 30.2 | 0 / −0.12 | 30.2 | 0 / −0.12 |
| | | | 1.7850 | 0 / −0.0100 | 3.5433 | 0 / −0.0006 | 1.1890 | 0 / −0.0047 | 1.1890 | 0 / −0.0047 |
| 1 15/16 | 3AC10-1. 15/16D1 | 3 | 49.225 | 0 / −0.013 | 90 | 0 / −0.015 | 30.2 | 0 / −0.12 | 30.2 | 0 / −0.12 |
| | | | 1.9380 | 0 / −0.0005 | 3.5433 | 0 / −0.0006 | 1.1890 | 0 / −0.0047 | 1.1890 | 0 / −0.0047 |
| 2 3/16 | 3AC11-2. 3/16D1 | 3 | 55.575 | 0 / −0.015 | 100 | 0 / −0.015 | 33.3 | 0 / −0.15 | 33.3 | 0 / −0.15 |
| | | | 2.1880 | 0 / −0.0006 | 3.9370 | 0 / −0.0006 | 1.3110 | 0 / −0.0059 | 1.3110 | 0 / −0.0059 |

Remarks: 1) Bearings suffixed with D1 have oil holes on the outer ring.

| Nominal dimensions | | | Basic load ratings | | Factor | Mass | |
|---|---|---|---|---|---|---|---|
| mm | | inch | N | lbf | | kg | lb |
| $r_{1s}$ min. | $s$ | $F$ | dynamic $C_r$ | static $C_{or}$ | $f_0$ | | |
| 1.5 | — | — | 29 100 | 17 800 | 14.0 | 0.61 | |
| 0.059 | — | — | 6 550 | 4 000 | | 1.35 | |
| 1.5 | 2.2 | 6.7 | 32 500 | 20 400 | 14.1 | 0.59 | |
| 0.059 | 0.087 | 0.264 | 7 350 | 4 600 | | 1.30 | |
| 1.5 | 2.2 | 6.7 | 32 500 | 20 400 | 14.1 | 0.68 | |
| 0.059 | 0.087 | 0.264 | 7 350 | 4 600 | | 1.50 | |
| 1.5 | 2.2 | 6.7 | 35 000 | 23 200 | 14.4 | 0.70 | |
| 0.059 | 0.087 | 0.264 | 7 900 | 5 200 | | 1.54 | |
| 1.5 | 2.2 | 6.7 | 35 000 | 23 200 | 14.4 | 0.65 | |
| 0.059 | 0.087 | 0.264 | 7 900 | 5 200 | | 1.43 | |
| 2 | 2.5 | 7.6 | 43 500 | 29 200 | 14.3 | 0.87 | |
| 0.079 | 0.098 | 0.299 | 9 750 | 6 550 | | 1.92 | |

## Ball bearing, round bore, spherical O.D.

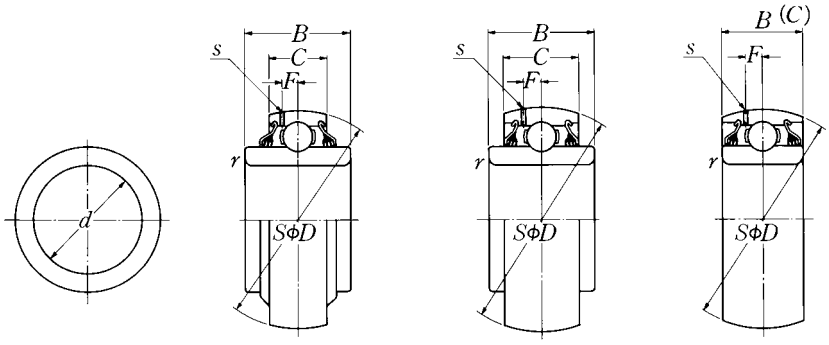


Type 1 Type 2 Type 3

| Shaft dia. inch | Bearing [1] number | Type | Nominal dimensions mm / inch d | D | C | B |
|---|---|---|---|---|---|---|
| 2.7559 | 3AC14D1 | 3 | 70 $^{0}_{-0.015}$ | 125 $^{0}_{-0.020}$ | 39.69 $^{0}_{-0.15}$ | 39.69 $^{0}_{-0.15}$ |
| | | | 2.7559 $^{0}_{-0.0006}$ | 4.9213 $^{0}_{-0.0008}$ | 1.5626 $^{0}_{-0.0059}$ | 1.5626 $^{0}_{-0.0059}$ |
| $1\frac{15}{16}$ | 3AC14-1.$\frac{15}{16}$D1 | 3 | 49.225 $^{0}_{-0.015}$ | 125 $^{0}_{-0.020}$ | 39.69 $^{0}_{-0.15}$ | 39.69 $^{0}_{-0.15}$ |
| | | | 1.9380 $^{0}_{-0.0006}$ | 4.9213 $^{0}_{-0.0008}$ | 1.5626 $^{0}_{-0.0059}$ | 1.5626 $^{0}_{-0.0059}$ |

Remarks: 1) Bearings suffixed with D1 have oil holes on the outer ring.

| Nominal dimensions | | | Basic load ratings | | Factor | Mass | |
|---|---|---|---|---|---|---|---|
| mm | | inch | N | lbf | | kg | lb |
| $r_{1s}$ min. | $s$ | $F$ | dynamic $C_r$ | static $C_{or}$ | $f_0$ | | |
| 2 | 3.0 | 9.4 | 62 000 | 44 000 | 14.5 | 1.56 | |
| 0.079 | 0.118 | 0.370 | 14 000 | 9 900 | | 3.44 | |
| 2 | 3.0 | 9.4 | 62 000 | 4 4000 | 14.5 | 2.20 | |
| 0.079 | 0.118 | 0.370 | 14 000 | 9 900 | | 4.85 | |

## Ball bearing, round bore, cylindrical O.D.

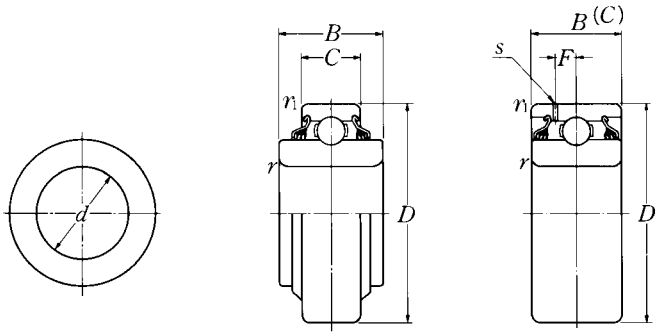


Type 5 Type 7

| Shaft dia. inch | Bearing [1] number | Type | Nominal dimensions mm / inch d | D | C | B |
|---|---|---|---|---|---|---|
| 1.1811 | 5AC06 | 5 | 30 $^{0}_{-0.010}$<br>1.1811 $^{0}_{-0.0004}$ | 62 $^{0}_{-0.013}$<br>2.4409 $^{0}_{-0.0005}$ | 16 $^{0}_{-0.12}$<br>0.6299 $^{0}_{-0.0047}$ | 25.4 $^{0}_{-0.12}$<br>1.0000 $^{0}_{-0.0047}$ |
| 1 15/16 | 5AC10-1. 15/16 | 5 | 49.225 $^{0}_{-0.013}$<br>1.9380 $^{0}_{-0.0005}$ | 90 $^{0}_{-0.015}$<br>3.5433 $^{0}_{-0.0006}$ | 20 $^{0}_{-0.12}$<br>0.7874 $^{0}_{-0.0047}$ | 49.2 $^{0}_{-0.12}$<br>1.9370 $^{0}_{-0.0047}$ |
| 1 13/32 | 7AC10-1. 13/32D1 | 7 | 35.725 $^{0}_{-0.013}$<br>1.4065 $^{0}_{-0.0005}$ | 90 $^{0}_{-0.015}$<br>3.5433 $^{0}_{-0.0006}$ | 30.2 $^{0}_{-0.12}$<br>1.1890 $^{0}_{-0.0047}$ | 30.2 $^{0}_{-0.12}$<br>1.1890 $^{0}_{-0.0047}$ |
| 1 15/16 | 7AC10-1. 15/16D1 | 7 | 49.225 $^{0}_{-0.013}$<br>1.9380 $^{0}_{-0.0005}$ | 90 $^{0}_{-0.015}$<br>3.5433 $^{0}_{-0.0006}$ | 30.2 $^{0}_{-0.12}$<br>1.1890 $^{0}_{-0.0047}$ | 30.2 $^{0}_{-0.12}$<br>1.1890 $^{0}_{-0.0047}$ |
| 2 3/16 | 7AC11-2. 3/16D1 | 7 | 55.575 $^{0}_{-0.015}$<br>2.1880 $^{0}_{-0.0006}$ | 100 $^{0}_{-0.015}$<br>3.9370 $^{0}_{-0.0006}$ | 33.3 $^{0}_{-0.15}$<br>1.3110 $^{0}_{-0.0059}$ | 33.3 $^{0}_{-0.15}$<br>1.3110 $^{0}_{-0.0059}$ |

Remarks: 1) Bearings suffixed with D1 have oil holes on the outer ring.

| Nominal dimensions | | | | Basic load ratings | | Factor | Mass | |
|---|---|---|---|---|---|---|---|---|
| mm | | inch | | N | lbf | | kg | lb |
| $r_s$ min. | $r_{1s}$ min. | $s$ | $F$ | dynamic $C_r$ | static $C_{or}$ | $f_0$ | | |
| 1 | 0.6 | — | — | 19 500 | 11 300 | 13.8 | 0.21 | |
| 0.039 | 0.024 | — | — | 4 400 | 2 540 | | 0.46 | |
| 1.5 | 1.5 | — | — | 35 000 | 23 200 | 14.4 | 0.74 | |
| 0.059 | 0.059 | — | — | 7 900 | 5 200 | | 1.63 | |
| 1.5 | 1.5 | 2.2 | 6.7 | 35 000 | 23 200 | 14.4 | 0.88 | |
| 0.059 | 0.059 | 0.087 | 0.264 | 7 900 | 5 200 | | 1.94 | |
| 1.5 | 1.5 | 2.2 | 6.7 | 35 000 | 23 200 | 14.4 | 0.68 | |
| 0.059 | 0.059 | 0.087 | 0.264 | 7 900 | 5 200 | | 1.50 | |
| 2 | 2 | 2.5 | 7.6 | 43 500 | 29 200 | 14.3 | 0.91 | |
| 0.079 | 0.079 | 0.098 | 0.299 | 9 750 | 6 550 | | 2.01 | |

## Ball bearing, hex-bore

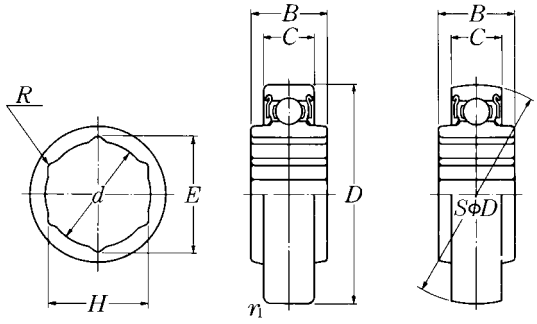


Type 1 Type 2

| Shaft size inch | Bearing [1] number | Type | Nominal dimensions mm / inch | | | | | | | | | | |
|---|---|---|---|---|---|---|---|---|---|---|---|---|---|
| | | | H | | d max. | R max. | E min. | D | | | C | | |
| 9/16 | 1AH03-9/16 | 1 | 14.3 | +0.127 0 | 14.7 | 0.25 | 16.435 | 40 | 0 −0.011 | | 12 | 0 −0.12 | |
| | | | 0.5630 | +0.0050 0 | 0.579 | 0.010 | 0.6470 | 1.5748 | 0 −0.0004 | | 0.4724 | 0 −0.0047 | |
| 11/16 | 1AH04-11/16 | 1 | 17.653 | +0.127 0 | 18.1 | 0.25 | 20.307 | 47 | 0 −0.011 | | 14 | 0 −0.12 | |
| | | | 0.6950 | +0.0050 0 | 0.713 | 0.010 | 0.7995 | 1.8504 | 0 −0.0004 | | 0.5512 | 0 −0.0047 | |
| 7/8 | 1AH05-7/8 | 1 | 22.250 | +0.127 0 | 22.8 | 0.25 | 25.615 | 52 | 0 −0.013 | | 15 | 0 −0.12 | |
| | | | 0.8760 | +0.0050 0 | 0.898 | 0.010 | 1.0085 | 2.0472 | 0 −0.0005 | | 0.5906 | 0 −0.0047 | |
| 1 | 1AH06-1 | 1 | 25.425 | +0.127 0 | 26.1 | 0.25 | 29.281 | 62 | 0 −0.013 | | 16 | 0 −0.12 | |
| | | | 1.0010 | +0.0050 0 | 1.028 | 0.010 | 1.1528 | 2.4409 | 0 −0.0005 | | 0.6299 | 0 −0.0047 | |
| 7/8 | 2AH05-7/8 | 2 | 22.25 | +0.127 0 | 22.8 | 0.25 | 25.615 | 52 | 0 −0.013 | | 15 | 0 −0.12 | |
| | | | 0.8760 | +0.0050 0 | 0.898 | 0.010 | 1.0085 | 2.0472 | 0 −0.0005 | | 0.5906 | 0 −0.0047 | |
| 1 | 2AH06-1 | 2 | 25.425 | +0.127 0 | 26.1 | 0.25 | 29.281 | 62 | 0 −0.013 | | 16 | 0 −0.12 | |
| | | | 1.0010 | +0.0050 0 | 1.028 | 0.010 | 1.1528 | 2.4409 | 0 −0.0005 | | 0.6299 | 0 −0.0047 | |
| 1 1/8 | 2AH07-1. 1/8 | 2 | 28.6 | +0.127 0 | 29.3 | 0.25 | 32.947 | 72 | 0 −0.013 | | 17 | 0 −0.12 | |
| | | | 1.1260 | +0.0050 0 | 1.154 | 0.010 | 1.2971 | 2.8346 | 0 −0.0005 | | 0.6693 | 0 −0.0047 | |

Remarks: 1) Bearings suffixed with D1 have oil holes on the outer ring.

| Nominal dimensions | | | Basic load ratings | | Factor | Mass | |
|---|---|---|---|---|---|---|---|
| mm | inch | | N | lbf | | kg | lb |
| $B$ | | $r_{1s}$ min. | dynamic $C_r$ | static $C_{or}$ | $f_0$ | | |
| 20.3 | $^{0}_{-0.12}$ | 0.6 | 9 600 | 4 600 | 12.8 | 0.08 | |
| 0.7992 | $^{0}_{-0.0047}$ | 0.024 | 2 160 | 1 030 | | 0.18 | |
| 21 | $^{0}_{-0.12}$ | 0.6 | 12 800 | 6 650 | 13.2 | 0.13 | |
| 0.8268 | $^{0}_{-0.0047}$ | 0.024 | 2 890 | 1 500 | | 0.29 | |
| 25.4 | $^{0}_{-0.12}$ | 0.6 | 14 000 | 7 850 | 13.9 | 0.16 | |
| 1.0000 | $^{0}_{-0.0047}$ | 0.024 | 3 150 | 1 770 | | 0.35 | |
| 24 | $^{0}_{-0.12}$ | 0.6 | 19 500 | 11 300 | 13.8 | 0.24 | |
| 0.9449 | $^{0}_{-0.0047}$ | 0.024 | 4 400 | 2 540 | | 0.53 | |
| 25.4 | $^{0}_{-0.12}$ | — | 14 000 | 7 850 | 13.9 | 0.16 | |
| 1.0000 | $^{0}_{-0.0047}$ | — | 3 150 | 1 770 | | 0.35 | |
| 24 | $^{0}_{-0.12}$ | — | 19 500 | 11 300 | 13.8 | 0.24 | |
| 0.9449 | $^{0}_{-0.0047}$ | — | 4 400 | 2 540 | | 0.53 | |
| 37.7 | $^{0}_{-0.12}$ | — | 25 700 | 15 300 | 13.8 | 0.45 | |
| 1.4843 | $^{0}_{-0.0047}$ | — | 5 750 | 3 450 | | 0.99 | |

## Ball bearing, hex-bore

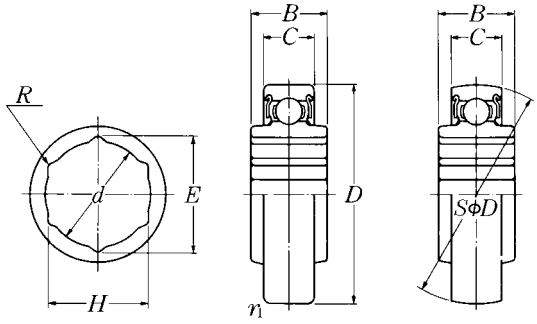


Type 1 Type 2

| Shaft size inch | Bearing [1] number | Type | Nominal dimensions mm / inch | | | | | | | | | |
|---|---|---|---|---|---|---|---|---|---|---|---|---|
| | | | H | | d max. | R max. | E min. | | D | | C | |
| 1½ | 2AH09-1.½ | 2 | 38.125 | +0.127<br>0 | 39 | 0.25 | 43.946 | 85 | 0<br>−0.015 | 19 | 0<br>−0.12 |
| | | | 1.5010 | +0.0050<br>0 | 1.535 | 0.010 | 1.7302 | 3.3465 | 0<br>−0.0006 | 0.7480 | 0<br>−0.0047 |

Remarks: 1) Bearings suffixed with D1 have oil holes on the outer ring.

| Nominal dimensions | | | Basic load ratings | | Factor | Mass | |
|---|---|---|---|---|---|---|---|
| mm | inch | | N | lbf | | kg | lb |
| $B$ | | $r_{1s}$ min. | dynamic $C_r$ | static $C_{or}$ | $f_0$ | | |
| 30 | $^{0}_{-0.12}$ | — | 32 500 | 20 400 | 14.1 | 0.54 | |
| 1.1811 | $^{0}_{-0.0047}$ | — | 7 350 | 4 600 | | 1.19 | |